VILLAGE OF GERMANTOWN
N112 W17001 MEQUON ROAD
GERMANTOWN, WI 53022

MEETING:	**PLAN COMMISSION**
DATE AND TIME:	**MONDAY, JUNE 11, 2018 6:30 p.m.**
LOCATION:	**Germantown Village Hall Board Room**

I. **CALL TO ORDER** This meeting has been given public notice in accordance with Wisconsin Statutes, Section 19.83 and 19.84 in such form that will apprise the general public and news media of subject matter that is intended for discussion and action.

II. **ROLL CALL**

III. **PUBLIC INPUT/PUBLIC APPEARANCE:** Please be advised per §19.84(2) that information will be received from the public, however, no action will be taken at this time.

IV. **APPROVAL OF MINUTES**: May 14, 2018

V. **PUBLIC HEARING**

A. Public Hearing of the Proposed Project Plan, Boundaries and Creation of Tax Incremental District No. 8.

VI. **NEW BUSINESS**

A. Consideration and Action on a Resolution Designating the Boundaries and Recommending Approval of the Project Plan for Tax Incremental District No. 8.

B. Zilber Property Group, Agent for Towne Realty, Inc., Brian & Kevin Kazmierczak, Richard & Mary Stephan and Frank & Mary Wiedmeyer, Property Owners of 151.31 Acres North of Holy Hill Road, West of Goldendale Road, South of Rockfield Road and East of US41/STH45. 2020 Land Use Plan Map Amendments (to change Land Classifications from “Mixed Use” to “Industrial/Office” and Sanitary Sewer Service Area Expansion) and Rezoning Application (A-1: Agricultural, A-2: Agricultural, Rs-1: Single-Family, and Rs-2: Single-Family Districts to the M-1: Limited Industrial District) to Facilitate Development of a 702,000 sqft Office/Warehouse Facility and Additional Industrial Development.

C. Pinnacle Engineering Group, Agent for Wacker Neuson Logistics Americas LLC, Property Owner, and Wacker Neuson, W180 N11691 River Lane. Site Plan Review for a 107,910 sqft Outdoor Storage Area, 6,000 sqft Building Addition and Site Improvements.

D. Keller Inc., Agent for Armour Equipment Leasing LLC, Property Owner, and Armour Coatings, Inc., N113 W18950 Carnegie Drive. Site Plan Review for a 1,665 sqft Industrial Building Addition, Loading Dock and Site Improvements.

E. Gehl Foods, Agent for AGNL Dairy, LLC, Property Owner, N116 W15970 Main Street. Site Plan Review for a 1,300 sqft Building Addition and Ammonia Equipment Installation.

F. Sheila & Daniel Cook, Agents for Straight-Line Collision (formerly Dick's Body Shop) and Thomas J. Solomon, Property Owner, W154 N11412 Fond du Lac Avenue. Sign Review.

VII. **ANNOUNCEMENTS**

VIII. **ADJOURNMENT**

The next Plan Commission Meeting will be on June 25, 2018 at 6:30 p.m.

UPON REASONABLE NOTICE, *efforts will be made to accommodate the needs of disabled individuals through appropriate aids and services. For additional information or to request this service please contact the Village Clerk at (262)250-4740 at least 2 days prior to the meeting. Notice is given that a majority of the Village Board may attend this meeting to gather information about an item over which they have decision making responsibility. This may constitute a meeting of the Village Board per State ex rel. Badke v. Greendale Village Board, even though the Village Board will not take formal action at this meeting.*

PLAN COMMISSION MINUTES
May 14, 2018

CALL TO ORDER: Chairman Wolter called the meeting to order at 6:30 p.m.

ROLL CALL: Chairman Dean Wolter, Trustee David Baum, Commissioners Peter Nilles, Tony Laszewski, Bob Williams and Matt Kimmler were present. Commissioner Bill Shadid was absent and excused. Also present were Community Development Director/Village Planner Jeff Retzlaff and Planning Assistant Lori Johnson. Chairman Wolter welcomed new Plan Commission member Matt Kimmler.

PUBLIC INPUT: None

APPROVAL OF MINUTES: ***MOTION Baum second Laszewski to Approve the minutes from 4-23-18. MOTION carried unanimously.***

Daniel & Rosanne Tetzlaff, W197 N12525 Prairie Ridge Ct. The property owners of a 5-acre residential parcel located in the Isabelle Farms Subdivision are requesting approval of a Conditional Use Permit (CUP) to allow the raising of poultry for family consumption on their property in the Rs-1 Single Family Zoning District. Planner Retzlaff summarized the proposal.

MOTION Baum second Laszewski to Approve a conditional use permit for Rosanne & Daniel Tetzlaff to allow the "raising of poultry for family consumption" on their property located at W197 N12525 Prairie Ridge Court subject to the following conditions:

1. ***The uses and activities allowed on the property shall be limited to those uses and activities and relative locations specified in the conditional use permit application (CUP) and supporting materials dated April 16, 2018. The physical facilities from which said uses and activities are permitted include the proposed coop and runs and shall be constructed and used as specified in the application and supporting materials.***
2. ***If the use, activities and/or operation subject of this permit falls out of conformity with the conditions herein, or where there is a change in the nature, character, intensity or extent of the permitted conditional uses and activities which cause special problems or harmful effects associated with the permitted uses and activities that were not revealed or anticipated at the time this CUP was granted, or, where conditions imposed by this CUP that were anticipated to mitigate or eliminate harmful effects associated with the uses and activities but are subsequently insufficient to do so, or, for similar cause based upon consideration for the public comfort, safety, and welfare, this conditional use permit may be terminated or modified by the Village Board by the amendment to or addition of conditions after public hearing thereon.***

MOTION carried unanimously.

Phylmack LLC, Agent for Speaker Properties LLC and J.W. Speaker Corporation – N121 W19996 Dalebrook Drive, Lot 1 and 2 in Block 5 of Neuland Subdivision on Josephine Drive. Proposal to amend the Speaker Corporation PDD by adding additional land to the PDD, modifying the General Development Plan and revising certain restrictions in the Conditions & Restrictions Resolution. Planner Retzlaff summarized the proposal.

MOTION Laszewski second Baum that the proposed PDD amendments are "Significant" changes that require a public hearing concurrent with the Village Board's consideration and action on the proposed amendments.

Discussion followed. Trustee Baum said he supports the motion because adding 3 additional lots and not putting the trees in on the north will bring the residents out because that was a main issue of theirs to start the buffering today so there is growth in the future. Planner Retzlaff said the lots were already owned by Speaker at the time the PDD was created but were not included. Chairman Wolter commented that no development would occur on the 3 lots.

MOTION carried unanimously.

MOTION Baum second Laszewski to Approve the proposed PDD amendments for the Speaker Corporation PDD, including: (1) amending the overall size and boundary of the PDD by rezoning and adding adjacent land; (2) modifying the General Development Plan (GDP) by changing the relative location of the SMT and Design Center buildings; and (3) modifying certain language in the Conditions & Restrictions Resolution (Res. No. 26-17) regarding the timing of landscape planning for the "future" development area subject to the following conditions:

1. ***The original General Development Plan (GDP) dated December 11, 2017 is replaced by the amendment GDP dated May 8, 2018.***
2. ***The proposed amendments shall be codified into a revised Conditions & Restrictions resolution to be considered for approval by the Village Board, including language addressing the agreement between Speaker and John Wagie allowing the 1.8-acre property to be used for residential purposes through June 2019.***
3. ***The existing tree line between the Neuland Subdivision and the west side of the proposed SMT building shall be enhanced with supplemental tree plantings and/or berming. Said landscaping enhancements shall be reflected in the required landscape plan to be submitted concurrent with Phase I development (east-west driveway and SMT building construction).***
4. ***That portion of the requirement under Section 5 in the original Conditions & Restrictions Resolution (Res. No. 26-17) that requires "… a detailed landscaping and buffer plan for the north perimeter of Lot 1 adjacent to the WSOR railroad and south perimeter of Outlot 3 as shown on the GDP shall be prepared and submitted to the Plan Commission for review and approval prior to commencement of construction of the Goldendale Road access driveway and utility installation" shall be deferred for a period of two (2) years after construction of the east-west driveway has commenced, or, July 1, 2020, whichever date occurs first.***

MOTION to Amend Baum second Kimmler to remove Condition #4 and not defer the landscaping for two years.

Discussion continued. Planner Retzlaff explained the request is that the preparation of the landscape plan for the area south of the railroad, along with the installation of some trees, be deferred until a site development plan comes forward. The staff recommendation supports the request to defer the pre-

DRAFT

planning of that area, but for a period of no more than 2 years. It does not eliminate the landscape requirement but simply defers it to a later date. Commissioner Williams asked if the proposed driveway could be seen from Isabelle Farms subdivision. Commissioner Kimmler said a few houses would be able to see the driveway. Planner Retzlaff stated there is an existing tree line along the rail road on both the north side and south side and the intention is to supplement that as shown on the general development plan. He said the supplemental landscaping is not intended to obscure the view of the driveway 100 percent from the north.

Discussion continued on the type of trees currently planted along the railroad tracks. Jaime Speaker explained he is still committed to do the north buffer but it's an issue of timing due to a number of delays with the project. After getting into the details, they were required to shift the buildings. He said they need to submit the site plan and road plans for review. All he is asking for is a 2-year deferral to have more time to come up with something reasonable on the northern boundary and get the southern landscaping in now. He will then come back to propose a plan for the north buffer. He also asked the Commission to consider this a minor change to the PDD.

MOTION to Amend Fails 3-3 (Wolter, Nilles, Williams against).

MOTION to Amend Kimmler second Nilles to have the planning for both the north and south area completed right away and delay planting along the north side until November 1, 2019.

Trustee Baum said they are asking to delay planning the landscaping on the north, so it can be done with more thought after the road goes in. Chairman Wolter further commented that the request to delay is only for the north section and that there is a very robust berming and planting section to the south. He added that there is a significant storm water issue in the area that needs to be addressed and would go along with the landscaping plan to hopefully lessen some of the issues for the subdivision to the south. It may be difficult to provide that kind of detailed plan in order to make the schedule for the next Plan Commission meeting.

MOTION to Amend Fails 5-1 (Kimmler).

MOTION to Approve the PDD Amendments carried unanimously.

MGS Manufacturing Group – W190 N11701 Moldmakers Way. MSI General, agent for MGS is seeking approval of site development and building plans for a 26,880 sqft building addition and partial raised roof expansion to the existing manufacturing facility. Planner Retzlaff summarized the proposal.

MOTION Baum second Nilles to Approve the site development & building plans for the 26,880 sqft building addition and 13,000 sqft partial raised roof expansion to the existing MGS manufacturing facility located at W190 N11701 Moldmakers Way subject to the following conditions:

1. ***This approval is subject to all the conditions and requirements set forth herein and adopted by the Plan Commission. Approval is granted for the site development and building plans dated April 16, 2018 (architectural plans), March 30, 2018 (engineering) and landscaping plans dated March 29, 2018, unless superseded by subsequent plan***

sheets approved by the Village Planner pursuant to revisions required herein and/or by the Plan Commission.

2. ***All roof-mounted mechanicals should be screened with an enclosure comprised of materials and/or color that either resembles or is compatible with the existing 6' high roof addition. Detailed specifications and plan elevations for the final RTU's and enclosures shall be submitted to the Village Planner for review and approval prior to issuance of an occupancy permit with installation completed not less than (6) months after an occupancy permit has been issued.***
3. ***All landscaping, screening, grading, and paving improvements shown on the approved site plans shall be installed as proposed prior to issuance of an occupancy permit unless a cash bond or letter of credit in an amount equal to 120 percent of the estimated installation and material costs reviewed and approved by the Village is submitted to the Village as necessary to ensure that installation of the proposed features and improvements will be completed within one (1) year after issuance of the occupancy permit.***
4. ***The Owner shall enter into a Landscape Maintenance Agreement with the Village as required under 17.43(6a) of the Zoning Code. Said agreement shall be executed by the Owner and submitted to the Village for recording prior to issuance of an occupancy permit.***
5. ***All exterior doors shall be clearly marked with reflective 5" or larger letters/numbers to aid emergency personnel access as required by the Police Department.***
6. ***All technical issues identified by the Village Engineer in the May 8, 2018 review memo shall be addressed prior to issuance of an occupancy permit.***
7. ***State approved plans and a $20,000 occupancy bond are required by the Building Inspection Department as part of the building permit application.***

Chairman Wolter said MGS has been a longstanding company in the community that supports a lot of Germantown activities and is very involved with the schools. He said it is a state of the art facility that makes a lot of parts used every day.

John Kutz, MSI General, said the existing building has 40 rooftop units that are not screened, and it would be difficult to screen the new units because of the size and location. He asked that the requirement to provide screening be waived. Planner Retzlaff said there were no specific deed restrictions for the industrial park and the requirement is based on necessity and past practice.

MOTION to Amend Baum second Laszewski to delete Condition #2 that requires roof-mounted mechanicals be screened.

MOTION to Amend carried unanimously.

MOTION to Approve as Amended carried unanimously.

<u>Fairway Knoll Senior Living Community, N112 W17500 Mequon Road</u>. VJS Construction Services is requesting approval for a monument sign for the new facility. Planner Retzlaff summarized the proposal.

MOTION Baum second Kimmler to Approve the proposed monument sign for the Fairway Knoll facility located at N112 W17500 Mequon Road subject to the following conditions:

1. ***An electrical permit shall be obtained from Inspection Services prior to installation of any/all electrical components.***
2. ***Landscaping materials (type, size and quantity) shall be installed as specified in the original site plan approval granted on July 11, 2016.***
3. ***All exterior lighting shall be shielded to prohibit glare affecting traveling public on Mequon Road. Directional lighting, glare shields and/or landscaping shall be utilized to prohibit glare. Additional details and specifications for all lighting components shall be submitted to the Village Planner for review/approval prior to obtaining a building (electrical) permit and installation.***
4. ***A minimum setback of 5 feet shall be maintained between the nearest edge of the sign base and the nearest property line.***

Justin Gross, VJS, commented on condition #3 requiring glare shields. He said the lights for the sign would be pointed in towards the property and not towards the street.

MOTION to Amend Baum second Nilles the change condition #3 to require glare shields when glare is presented at a roadway either at the drive lane or the street.

MOTION to Amend carried unanimously.

MOTION to Approve as Amended carried unanimously.

ANNOUNCEMENTS: Chairman Wolter said Mai Fest is this weekend.

ADJOURNMENT: There being no further business, the meeting was adjourned at 7:40 p.m.

Respectfully submitted,

Lori Johnson
Planning Assistant

DRAFT

NOTICE OF PUBLIC HEARING
AND JOINT REVIEW BOARD MEETING
REGARDING THE PROPOSED CREATION OF
TAX INCREMENTAL DISTRICT NO. 8
IN THE VILLAGE OF GERMANTOWN, WISCONSIN

Notice is Hereby Given that the Village of Germantown will hold an organizational Joint Review Board meeting on June 11, 2018 at 5:30 p.m. at the Germantown Village Hall, located at N112 W17001 Mequon Road. The purpose of this meeting is to organize a Joint Review Board for purposes of considering the proposed creation of, and proposed project plan for, Tax Incremental District No. 8 (the "District").

Notice is Hereby Given that the Plan Commission of the Village of Germantown will hold a public hearing on June 11, 2018 at 6:30 p.m.at the Germantown Village Hall, located at N112 W17001 Mequon Road, for the purpose of providing the community a reasonable opportunity to comment upon the proposed creation of the Project Plan for the District.

The proposed boundaries of the District would be within an area detailed on the map below.

The District is expected to be an industrial district based on the identification and classification of the property proposed to be included within the District.

Proposed projects costs include various public improvements and cash grants to owners or lessee or developers of land located within the district (development incentives) and professional and organizational services, administrative costs, and finance costs. The proposed costs include projects within the proposed boundary and within a ½ mile radius of the proposed boundary of the District.

All interested parties will be given a reasonable opportunity to express their views on the proposed creation of the District, the proposed boundaries of the District, and the proposed Project Plan thereof. A copy of the Project Plan, including a description of the proposed boundaries, will be available for viewing in the offices of the Village Clerk at the Germantown Village Hall, located at N112 W17001 Mequon Road, during normal business hours and will be provided upon request.

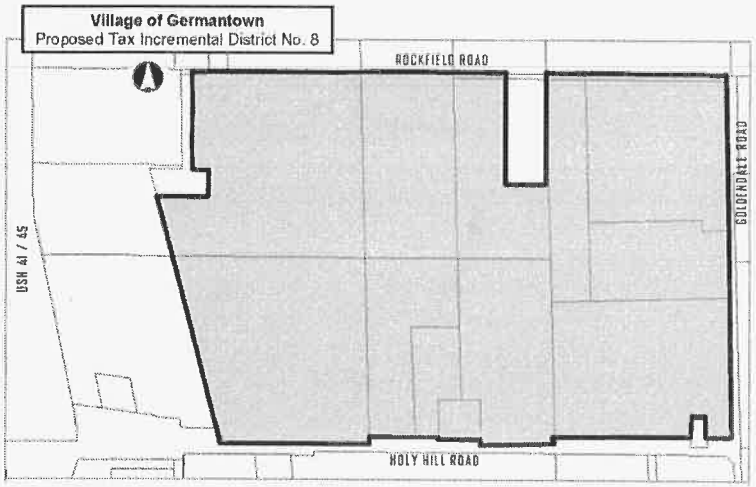

Such hearing shall be public and citizens and interested parties shall then be heard. This hearing may be adjourned from time to time.

By Order of the Village of Germantown, Wisconsin

Published May 23, 2018 & May 30, 2018

RESOLUTION NO. _____

RESOLUTION DESIGNATING PROPOSED BOUNDARIES AND APPROVING A PROJECT PLAN FOR TAX INCREMENTAL DISTRICT NO. 8, VILLAGE OF GERMANTOWN, WISCONSIN

WHEREAS, the Village of Germantown (the "Village") has determined that use of Tax Incremental Financing is required to promote development and redevelopment within the Village; and

WHEREAS, Tax Incremental District No. 8 (the "District") is proposed to be created by the Village as an industrial district in accordance with the provisions of Wisconsin Statutes Section 66.1105 (the "Tax Increment Law"); and

WHEREAS, a Project Plan for the District has been prepared that includes:

a. A statement listing of the kind, number and location of all proposed public works or improvements within the District, or to the extent provided in Wisconsin Statutes Sections 66.1105(2)(f)1.k. and 66.1105(2)(f)1.n., outside of the District;
b. An economic feasibility study;
c. A detailed list of estimated project costs;
d. A description of the methods of financing all estimated project costs and the time when the related costs or monetary obligations are to be incurred;
e. A map showing existing uses and conditions of real property in the District;
f. A map showing proposed improvements and uses in the District;
g. Proposed changes of zoning ordinances, master plan, map, building codes and Village ordinances;
h. A list of estimated non-project costs;
i. A statement of the proposed plan for relocation of any persons to be displaced;
j. A statement indicating how the District promotes the orderly development of the Village;
k. An opinion of the Village Attorney or of an attorney retained by the Village advising that the plan is complete and complies with Wisconsin Statutes Section 66.1105(4)(f).

WHEREAS, prior to its publication, a copy of the notice of public hearing was sent to the chief executive officers of Washington County, the Germantown School District, and the Milwaukee Area Technical College District, and any other entities having the power to levy taxes on property located within the District, in accordance with the procedures specified in the Tax Increment Law; and

WHEREAS, in accordance with the procedures specified in the Tax Increment Law, the Plan Commission, on June 11, 2018 held a public hearing concerning the project plan and boundaries and proposed creation of the District, providing interested parties a reasonable opportunity to express their views thereon.

NOW, THEREFORE, BE IT RESOLVED by the Plan Commission of the Village of Germantown that:

1. It recommends to the Village Board that Tax Incremental District No. 8 be created with boundaries as designated in Exhibit A of this Resolution.

2. It approves and adopts the Project Plan for the District, attached as Exhibit B, and recommends its approval to the Village Board.

3. Creation of the District promotes orderly development in the Village.

Adopted this _____ day of _____, 2018.

_____
Plan Commission Chair

_____
Secretary of the Plan Commission

EXHIBIT A -

LEGAL BOUNDARY DESCRIPTION OR MAP OF TAX INCREMENTAL DISTRICT NO. 8 VILLAGE OF GERMANTOWN

THIS CAN BE FOUND IN THE PROJECT PLAN

EXHIBIT B -

PROJECT PLAN

THIS WILL BE HANDED OUT SEPARATELY

EHLERS
LEADERS IN PUBLIC FINANCE

Village of Germantown

Village of Germantown TID 8 - Financial Feasibility Analysis

Phil Cosson & Maureen Holsen, Ehlers

5/21/18

TID 8 Feasibility Analysis Information

- Proposed Map of Boundary
- TID Area Overview
- Phase 1 - Development Proposal
  - Initial Development Assumptions
  - Project Costs (Phased)
- Key Financial Assumptions
- Financial Feasibility Analysis (Phase 1 & Overall TID)
- Timetable For TID Creation

EHLERS
LEADERS IN PUBLIC FINANCE

Proposed TID 8 Boundaries

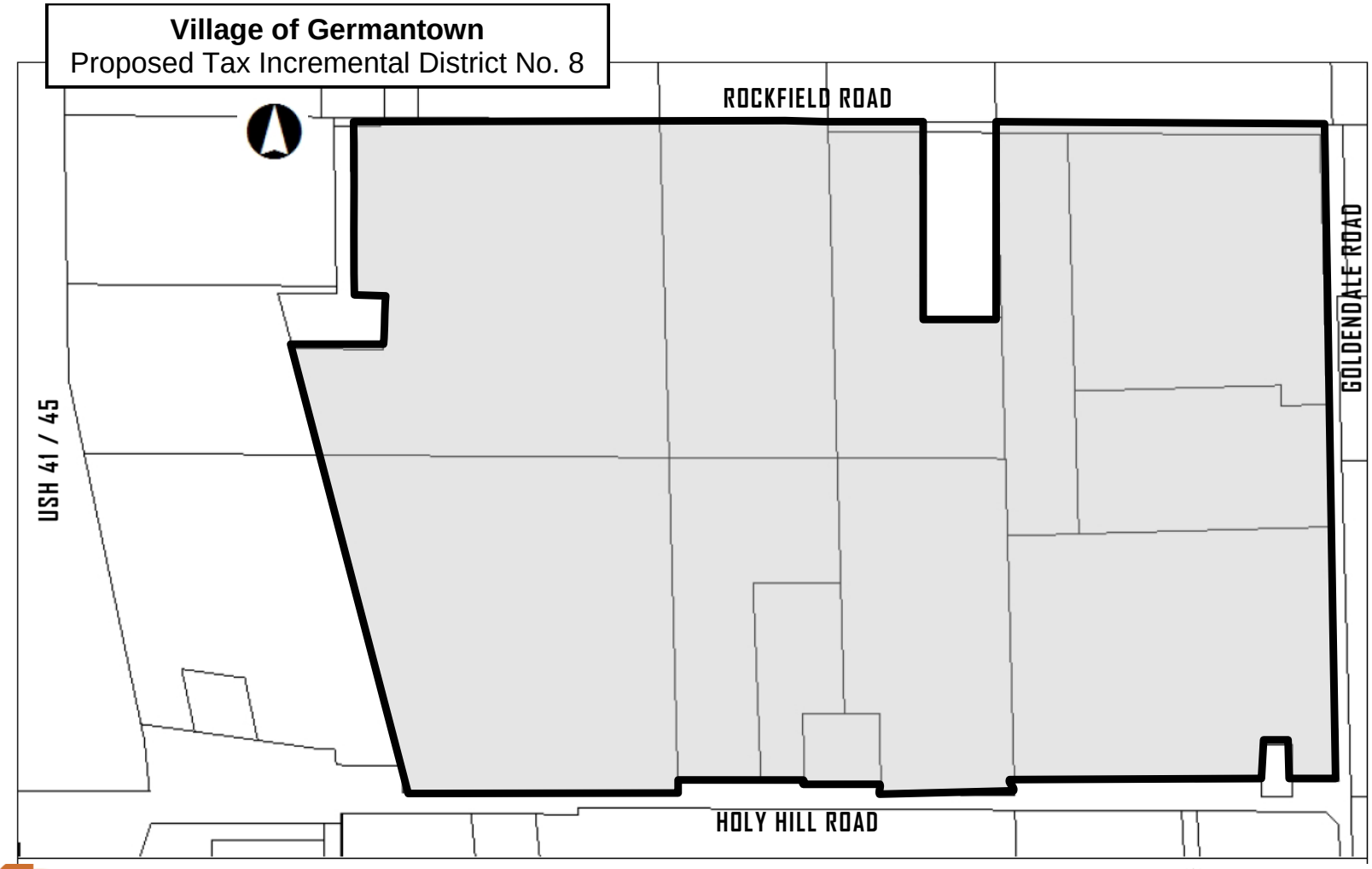

EHLERS
LEADERS IN PUBLIC FINANCE

TID 8 Overview

- 2018 TID Created Prior to 9-31-18
- Industrial TID – Minimum of 50% of acreage zoned and suitable for industrial development
- Industrial TID – Maximum Life 20 Years (expenditure period 15 years)
- TID 8 can’t receive revenues from existing TIDs
- Approximately 108 developable acres
- Initial Development: Approximately 80 acres
- Phased Infrastructure Costs to Minimize Financial Risk

EHLERS
LEADERS IN PUBLIC FINANCE

Phase 1 - Development & Cost Proposal

- Initial Development – Phase 1:
  - Construct Building 1 in 2018 - Estimated Value of $28M
  - Construct Building 2 in 2019 – Estimated Value of $5M
  - Total Commitment of $33M in New Development
  - Use Approximately 50 of the 80 Available Acres
  - Contribution of 2 Acres to Village for Future Water Facilities

- Preliminary Capital Expenditures – Phase 1 (est.)
  - Offsite Improvements: $5,070,000 including water/sewer to the site and reconstruct Holy Hill Road (for approx. 2,600 feet) (Borrowed By Village)
  - Internal Improvements: $1,600,000 (Borrowed By Village)
  - Development Incentive: Up to $1M from Washington County (Job Based)
  - Professional Services/TID Setup: $25K

EHLERS
LEADERS IN PUBLIC FINANCE

Phase 1: Financial Assumptions

- Key Assumptions:
  - Equalized Tax Rate: $17.58
  - No Property Value Increase or Decrease for Life of TID
  - Development of $33M in Taxable Development in 2018-19
  - A $1M loan from the County to be paid back with TID increment
  - Village to borrow for Phase 1 external and initial internal costs in 2018:
    - The 2018 financing of $7.3M includes issuance expenses & capitalized interest
  - Financial Outcome of Phase 1
    - Assuming no additional development there is a cumulative shortfall of $300K by the end of the TID Life

EHLERS
LEADERS IN PUBLIC FINANCE

TID 8 Costs

Village of Germantown

Tax Increment District #8

Estimated Project List

Project ID	Project Name/Type	Phase I 2018	Phase II TBD	Total
1	Public Improvments - Offsite	5,070,000	3,130,000	8,200,000
2	Public Improvments - Internal	1,600,000	1,500,000	3,100,000
3	Development Incentive	1,000,000	0	1,000,000
4	Professional Services	25,000	0	25,000
Total Projects		7,695,000	4,630,000	12,325,000

Notes:

Note 1 Project costs are estimates per Developer & Village staff

Note 2 To be provided by Washington County - Dependant Upon Job Creations, etc.

Draft

EHLERS
LEADERS IN PUBLIC FINANCE

Phase 1 Development Assumptions

Village of Germantown

Tax Increment District #8

Development Assumptions - Phase 1 Only

Construction Year		Building 1[1]	Building 2[2]	Annual Total	Construction Year	
1	2018	8,400,000		8,400,000	2018	1
2	2019	19,600,000	5,000,000	24,600,000	2019	2
3	2020			0	2020	3
4	2021			0	2021	4
5	2022			0	2022	5
6	2023			0	2023	6
7	2024			0	2024	7
8	2025			0	2025	8
9	2026			0	2026	9
10	2027			0	2027	10
	Totals	28,000,000	5,000,000	33,000,000		

Notes:

[1]**Building 1 - Assumes a 700K SF building with a construction value of $40 per SF completed in 2019. Minimum value of $28M.**

[2]**Building 2 - Assumes a 150K SF building constructed in 2019 with a minimum value of $5M.**

Draft

EHLERS
LEADERS IN PUBLIC FINANCE

Phase 1 Increment

Village of Germantown

Tax Increment District #8

Tax Increment Projection Worksheet - Phase 1

Type of District	Industrial	
Creation Date	July 1, 2018	
Valuation Date	Jan 1,	2018
Max Life (Years)	20	
Expenditure Periods/Termination	15	7/1/2033
Revenue Periods/Final Year	21	2040
Extension Eligibility/Years	Yes	3
Adverse Impact Eligibility		
Recipient District	No	

Base Value	0
Appreciation Factor	0.00%
Base Tax Rate	$17.58
Rate Adjustment Factor	0.00%
Tax Exempt Discount Rate	3.50%
Taxable Discount Rate	4.00%

	Construction Year	Value Added	Valuation Year	Inflation Increment	Total Increment	Revenue Year	Tax Rate	Tax Increment
1	2018	8,400,000	2019	0	8,400,000	2020	$17.58	**147,664**
2	2019	24,600,000	2020	0	33,000,000	2021	$17.58	**580,107**
3	2020	0	2021	0	33,000,000	2022	$17.58	**580,107**
4	2021	0	2022	0	33,000,000	2023	$17.58	**580,107**
5	2022	0	2023	0	33,000,000	2024	$17.58	**580,107**
6	2023	0	2024	0	33,000,000	2025	$17.58	**580,107**
7	2024	0	2025	0	33,000,000	2026	$17.58	**580,107**
8	2025	0	2026	0	33,000,000	2027	$17.58	**580,107**
9	2026	0	2027	0	33,000,000	2028	$17.58	**580,107**
10	2027	0	2028	0	33,000,000	2029	$17.58	**580,107**
11	2028	0	2029	0	33,000,000	2030	$17.58	**580,107**
12	2029	0	2030	0	33,000,000	2031	$17.58	**580,107**
13	2030	0	2031	0	33,000,000	2032	$17.58	**580,107**
14	2031	0	2032	0	33,000,000	2033	$17.58	**580,107**
15	2032	0	2033	0	33,000,000	2034	$17.58	**580,107**
16	2033	0	2034	0	33,000,000	2035	$17.58	**580,107**
17	2034	0	2035	0	33,000,000	2036	$17.58	**580,107**
18	2035	0	2036	0	33,000,000	2037	$17.58	**580,107**
19	2036	0	2037	0	33,000,000	2038	$17.58	**580,107**
20	2037	0	2038	0	33,000,000	2039	$17.58	**580,107**
	Totals	**33,000,000**		**0**			**Future Value of Increment**	**11,169,692**

Notes:

Actual results will vary depending on development, inflation of overall tax rates.

EHLERS
LEADERS IN PUBLIC FINANCE

Phase 1 Cashflow

Village of Germantown

Tax Increment District #8

Cash Flow Projection - Borrow Phase 1 Costs

Year	Projected Revenues				Expenditures									Balances			Year
					G.O. Bond			Municipal Revenue Obligation (MRO									
					7,280,000			1,000,000									
	Tax	Interest Earnings/	Capitalized	Total	Dated Date:	09/01/18		Dated Date:	09/01/18				Total			Principal	
	Increments	(Cost)	Interest	Revenues	Principal	Est. Rate	Interest	Principal	Est. Rate	Interest	TID Set Up	Admin.	Expenditures	Annual	Cumulative	Outstanding	Year
		1.00%			Note 1			Note 2									
2018			465,515	465,515							25,000		25,000	440,515	440,515	7,280,000	2018
2019		4,405		4,405		2.25%	232,758					5,000	237,758	(233,352)	207,163	7,280,000	2019
2020	147,664	2,072		149,735		2.25%	232,758					5,000	237,758	(88,022)	119,140	7,280,000	2020
2021	580,107	1,191		581,298	200,000	2.30%	230,458	(30,188)	3.56%	111,652		5,000	516,922	64,376	183,517	7,080,000	2021
2022	580,107	1,835		581,942	200,000	2.40%	225,758	44,916	3.56%	36,549		5,000	512,222	69,720	253,237	6,880,000	2022
2023	580,107	2,532		582,639	250,000	2.50%	220,233	46,541	3.56%	34,923		5,000	556,697	25,942	279,179	6,630,000	2023
2024	580,107	2,792		582,899	250,000	2.65%	213,795	48,225	3.56%	33,239		5,000	550,259	32,639	311,818	6,380,000	2024
2025	580,107	3,118		583,225	300,000	2.80%	206,283	49,970	3.56%	31,494		5,000	592,747	(9,522)	302,297	6,080,000	2025
2026	580,107	3,023		583,130	325,000	2.90%	197,370	51,779	3.56%	29,686		5,000	608,834	(25,705)	276,592	5,755,000	2026
2027	580,107	2,766		582,873	350,000	3.00%	187,408	53,652	3.56%	27,812		5,000	623,872	(40,999)	235,593	5,405,000	2027
2028	580,107	2,356		582,463	375,000	3.05%	176,439	55,594	3.56%	25,871		5,000	637,903	(55,440)	180,153	5,030,000	2028
2029	580,107	1,802		581,908	400,000	3.10%	164,520	57,606	3.56%	23,859		5,000	650,984	(69,076)	111,077	4,630,000	2029
2030	580,107	1,111		581,218	400,000	3.15%	152,020	59,690	3.56%	21,774		5,000	638,484	(57,267)	53,810	4,230,000	2030
2031	580,107	538		580,645	425,000	3.20%	138,920	61,850	3.56%	19,614		5,000	650,384	(69,739)	(15,930)	3,805,000	2031
2032	580,107	(159)		579,947	450,000	3.30%	124,695	64,088	3.56%	17,376		5,000	661,159	(81,212)	(97,142)	3,355,000	2032
2033	580,107	(971)		579,135	475,000	3.35%	109,314	66,407	3.56%	15,057		5,000	670,778	(91,643)	(188,784)	2,880,000	2033
2034	580,107	(1,888)		578,219	500,000	3.40%	92,858	68,810	3.56%	12,654		5,000	679,322	(101,103)	(289,887)	2,380,000	2034
2035	580,107	(2,899)		577,208	525,000	3.45%	75,301	71,300	3.56%	10,164		5,000	686,766	(109,558)	(399,445)	1,855,000	2035
2036	580,107	(3,994)		576,112	575,000	3.50%	56,183	73,881	3.56%	7,584		5,000	717,647	(141,534)	(540,979)	1,280,000	2036
2037	580,107	(5,410)		574,697	600,000	3.55%	35,470	76,554	3.56%	4,910		5,000	721,934	(147,237)	(688,217)	680,000	2037
2038	580,107	(6,882)		573,225	680,000	3.65%	12,410	79,324	3.56%	2,140		5,000	778,874	(205,650)	(893,866)	0	2038
2039	580,107	(8,939)		571,168									0	571,168	(322,698)	0	2039
Total	11,169,692	(1,602)	465,515	11,633,606	7,280,000		3,084,946	1,000,000		466,358	25,000	100,000	11,956,304				Total

Notes:

1 Assumes the debt payment for the Village offsite and internal phase infrastructure. Interest rates are based upon the Yield Curves as of 5-17-18 for an A rated Bond.

2 Assumes a loan from WCEDC with increment being paid with TID increment.

Draft

EHLERS
LEADERS IN PUBLIC FINANCE

Overall TID Feasibility

- Remaining Infrastructure – (est.):
  - Offsite Roadway Improvements & Internal Infrastructure: $4.6M
  - Future Incentives: Unknown
  - Future Water Improvements (A portion of a new well & tower could be paid through excess increment).

- Potential Future Development:
  - Discussion with a local company interested in expanding in the TID around 2022.
    - Initial Expansion would be approximately 250K square feet, with an $11M value
    - Possible additional expansion around 2027
  - Additional 28 acres of land for development
  - Financial Outcome of Overall TID:
    - It will take another $31M in development over 9 years to fully reimburse the remaining $4.6M in estimated remaining costs

EHLERS
LEADERS IN PUBLIC FINANCE

Overall TID Costs

Village of Germantown

Tax Increment District #8

Estimated Project List

Project ID	Project Name/Type	Phase I 2018	Phase II TBD	Total
1	Public Improvments - Offsite	5,070,000	3,130,000	8,200,000
2	Public Improvments - Internal	1,600,000	1,500,000	3,100,000
3	Development Incentive	1,000,000	0	1,000,000
4	Professional Services	25,000	0	25,000
Total Projects		7,695,000	4,630,000	12,325,000

Notes:

Note 1 Project costs are estimates per Developer & Village staff

Note 2 To be provided by Washington County - Dependant Upon Job Creations, etc.

Draft

EHLERS
LEADERS IN PUBLIC FINANCE

Overall TID Development

Village of Germantown

Tax Increment District #8

Development Assumptions

Construction Year		Building 1[1]	Building 2[2]	Building 3[3]	Annual Total	Construction Year	
1	2018	8,400,000			8,400,000	2018	1
2	2019	19,600,000	5,000,000		24,600,000	2019	2
3	2020				0	2020	3
4	2021		5,000,000		5,000,000	2021	4
5	2022			11,250,000	11,250,000	2022	5
6	2023		5,000,000		5,000,000	2023	6
7	2024				0	2024	7
8	2025		5,000,000		5,000,000	2025	8
9	2026				0	2026	9
10	2027		5,000,000		5,000,000	2027	10
	Totals	28,000,000	25,000,000	11,250,000	64,250,000		

Notes:

[1]**Building 1 - Assumes a 700K SF building with a construction value of $40 per SF completed in 2019. Minimum Value Guarentee of $28M.**

[2]**Buildings 2 - Assumes 1 building each 150K SF constructed every other year starting in 2019.**

[3]**Building 3 - Assumes a 250K SF building with a construction value of $45 per SF completed in 2022.**

Draft

EHLERS
LEADERS IN PUBLIC FINANCE

Overall Increment

Village of Germantown

Tax Increment District #8

Tax Increment Projection Worksheet - Overall TID

Type of District	Industrial	
Creation Date	July 1, 2018	
Valuation Date	Jan 1,	2018
Max Life (Years)	20	
Expenditure Periods/Termination	15	7/1/2033
Revenue Periods/Final Year	21	2040
Extension Eligibility/Years	Yes	3
Adverse Impact Eligibility		
Recipient District	No	

Base Value	0
Appreciation Factor	0.00%
Base Tax Rate	$17.58
Rate Adjustment Factor	0.00%
Tax Exempt Discount Rate	3.50%
Taxable Discount Rate	4.00%

	Construction Year	Value Added	Valuation Year	Inflation Increment	Total Increment	Revenue Year	Tax Rate	Tax Increment
1	2018	8,400,000	2019	0	8,400,000	2020	$17.58	**147,664**
2	2019	24,600,000	2020	0	33,000,000	2021	$17.58	**580,107**
3	2020	0	2021	0	33,000,000	2022	$17.58	**580,107**
4	2021	5,000,000	2022	0	38,000,000	2023	$17.58	**668,002**
5	2022	11,250,000	2023	0	49,250,000	2024	$17.58	**865,765**
6	2023	5,000,000	2024	0	54,250,000	2025	$17.58	**953,660**
7	2024	0	2025	0	54,250,000	2026	$17.58	**953,660**
8	2025	5,000,000	2026	0	59,250,000	2027	$17.58	**1,041,555**
9	2026	0	2027	0	59,250,000	2028	$17.58	**1,041,555**
10	2027	5,000,000	2028	0	64,250,000	2029	$17.58	**1,129,450**
11	2028	0	2029	0	64,250,000	2030	$17.58	**1,129,450**
12	2029	0	2030	0	64,250,000	2031	$17.58	**1,129,450**
13	2030	0	2031	0	64,250,000	2032	$17.58	**1,129,450**
14	2031	0	2032	0	64,250,000	2033	$17.58	**1,129,450**
15	2032	0	2033	0	64,250,000	2034	$17.58	**1,129,450**
16	2033	0	2034	0	64,250,000	2035	$17.58	**1,129,450**
17	2034	0	2035	0	64,250,000	2036	$17.58	**1,129,450**
18	2035	0	2036	0	64,250,000	2037	$17.58	**1,129,450**
19	2036	0	2037	0	64,250,000	2038	$17.58	**1,129,450**
20	2037	0	2038	0	64,250,000	2039	$17.58	**1,129,450**
	Totals	**64,250,000**		**0**			**Future Value of Increment**	**19,256,029**

Notes:

Actual results will vary depending on development, inflation of overall tax rates.

EHLERS
LEADERS IN PUBLIC FINANCE

Overall Cashflow

Village of Germantown

Tax Increment District #8

Cash Flow Projection - Overall TID

	Projected Revenues				Expenditures												Balances			
					G.O. Bond 7,280,000			Municipal Revenue Obligation (MRO 1,000,000			G.O. Bond 4,720,000									
Year	Tax Increments	Interest Earnings/ (Cost)	Capitalized Interest	Total Revenues	Dated Date: Principal	09/01/18 Est. Rate	Interest	Dated Date: Principal	09/01/18 Est. Rate	Interest	Dated Date: Principal	09/01/20 Est. Rate	Interest	TID Set Up	Admin.	Total Expenditures	Annual	Cumulative	Principal Outstanding	Year
		1.00%			Note 1			Note 2			Note 3									
2018			465,515	465,515										25,000		25,000	440,515	440,515	7,280,000	2018
2019		4,405		4,405	0	2.25%	232,758								5,000	237,758	(233,352)	207,163	7,280,000	2019
2020	147,664	2,072		149,735	0	2.25%	232,758								5,000	237,758	(88,022)	119,140	7,280,000	2020
2021	580,107	1,191	182,388	763,686	200,000	2.30%	230,458	(30,188)	3.56%	111,652	0	2.80%	182,388		5,000	699,309	64,376	183,517	7,080,000	2021
2022	580,107	1,835		581,942	200,000	2.40%	225,758	44,916	3.56%	36,549	0	2.90%	182,388		5,000	694,609	(112,667)	70,849	6,880,000	2022
2023	668,002	708		668,710	250,000	2.50%	220,233	46,541	3.56%	34,923	0	3.00%	182,388		5,000	739,084	(70,374)	475	6,630,000	2023
2024	865,765	5		865,770	250,000	2.65%	213,795	48,225	3.56%	33,239	50,000	3.15%	181,600		5,000	781,859	83,911	84,386	6,380,000	2024
2025	953,660	844		954,504	300,000	2.80%	206,283	49,970	3.56%	31,494	150,000	3.30%	178,338		5,000	921,084	33,420	117,806	6,080,000	2025
2026	953,660	1,178		954,838	325,000	2.90%	197,370	51,779	3.56%	29,686	150,000	3.40%	173,313		5,000	932,147	22,692	140,498	5,755,000	2026
2027	1,041,555	1,405		1,042,960	350,000	3.00%	187,408	53,652	3.56%	27,812	200,000	3.50%	167,263		5,000	991,134	51,826	192,324	5,405,000	2027
2028	1,041,555	1,923		1,043,479	375,000	3.05%	176,439	55,594	3.56%	25,871	225,000	3.55%	159,769		5,000	1,022,672	20,807	213,130	5,030,000	2028
2029	1,129,450	2,131		1,131,582	400,000	3.10%	164,520	57,606	3.56%	23,859	240,000	3.60%	151,455		5,000	1,042,439	89,142	302,273	4,630,000	2029
2030	1,129,450	3,023		1,132,473	400,000	3.15%	152,020	59,690	3.56%	21,774	265,000	3.65%	142,299		5,000	1,045,783	86,690	388,963	4,230,000	2030
2031	1,129,450	3,890		1,133,340	425,000	3.20%	138,920	61,850	3.56%	19,614	290,000	3.70%	132,098		5,000	1,072,482	60,858	449,821	3,805,000	2031
2032	1,129,450	4,498		1,133,949	450,000	3.30%	124,695	64,088	3.56%	17,376	315,000	3.80%	120,748		5,000	1,096,907	37,042	486,863	3,355,000	2032
2033	1,129,450	4,869		1,134,319	475,000	3.35%	109,314	66,407	3.56%	15,057	340,000	3.85%	108,218		5,000	1,118,996	15,323	502,186	2,880,000	2033
2034	1,129,450	5,022		1,134,472	500,000	3.40%	92,858	68,810	3.56%	12,654	350,000	3.90%	94,848		5,000	1,124,169	10,303	512,489	2,380,000	2034
2035	1,129,450	5,125		1,134,575	525,000	3.45%	75,301	71,300	3.56%	10,164	375,000	3.95%	80,616		5,000	1,142,382	(7,807)	504,682	1,855,000	2035
2036	1,129,450	5,047		1,134,497	575,000	3.50%	56,183	73,881	3.56%	7,584	400,000	4.00%	65,210		5,000	1,182,857	(48,360)	456,323	1,280,000	2036
2037	1,129,450	4,563		1,134,014	600,000	3.55%	35,470	76,554	3.56%	4,910	425,000	4.05%	48,604		5,000	1,195,538	(61,525)	394,798	680,000	2037
2038	1,129,450	3,948		1,133,398	680,000	3.65%	12,410	79,324	3.56%	2,140	425,000	4.15%	31,179		5,000	1,235,053	(101,655)	293,143	0	2038
2039	1,129,450	2,931		1,132,382							520,000	4.30%	11,180			531,180	601,202	894,345	0	2039
Total	19,256,029	60,613	647,903	19,964,545	7,280,000		3,084,946	1,000,000		466,358	4,720,000		2,393,896	25,000	100,000	19,070,200				Total

Notes:

1 Assumes the debt payment for the Village offsite and internal phase infrastructure. Interest rates are based upon the Yield Curves as of 5-17-18 for an A rated Bond.

2 Assumes a loan from WCEDC with increment being paid with TID increment.

3 Assumes .50 basis points above the 5-17-18 scale.

Draft

EHLERS
LEADERS IN PUBLIC FINANCE

TID Creation – Key Dates

- Late May – Public Hearing Notices are Published
- June 11th - Initial Joint Review Board (JRB) & Plan Commission Public Hearing
- June 26th – Village Board Action
- Early July – Final JRB

EHLERS
LEADERS IN PUBLIC FINANCE

EHLERS

LEADERS IN PUBLIC FINANCE

Phil Cosson, CIPMA
Senior Municipal Advisor/Director

262-796-6161

pcosson@ehlers-inc.com

Maureen Holsen,
Municipal Advisor

262-796-6170

mholsen@ehlers-inc.com

2020 LAND USE PLAN MAP AMENDMENT & REZONING APPLICATIONS

6/11/18 Plan Commission Meeting

Zilber Property Group / Towne Realty Inc.

Village Planner Report **Germantown, Wisconsin**

Summary

Zilber Property Group, agent for Towne Realty Inc. and Brian & Kevin Kazmierczak, Richard & Mary Stephan and Frank & Mary Wiedmeyer, property owners, are requesting approval of amendments to the Village's 2020 Future Land Use Plan Map for 224.8 acres and a rezoning application for 151.3 acres located east of US41, west of Goldendale Road, north of Holy Hill Road and south of Rockfield Road.

Location: East of USH41, west of Goldendale Road, north of Holy Hill Road and south of Rockfield Road

Agent/ Property Owners:

Jason Lueders Towne Realty/Zilber PG 9560 58th Pl Suite 350 Kenosha, WI	Brian & Kevin Kazmierczak Richard & Mary Stephan Frank & Mary Wiedmeyer Germantown, WI

Current LUP Map: Mixed Use
Proposed LUP Map: Industrial/Office
Current Zoning: A-1 & A-2: Agricultural, Rs-1 & Rs-2: Single-Family
Proposed Zoning: M-1: Limited Industrial

Adjacent Land Uses		Zoning
North	Ag/Residential	A-1/Rs-2
South	Agricultural	A-1
East	Agricultural	A-1
West	Agricultural	A-1

Location Map

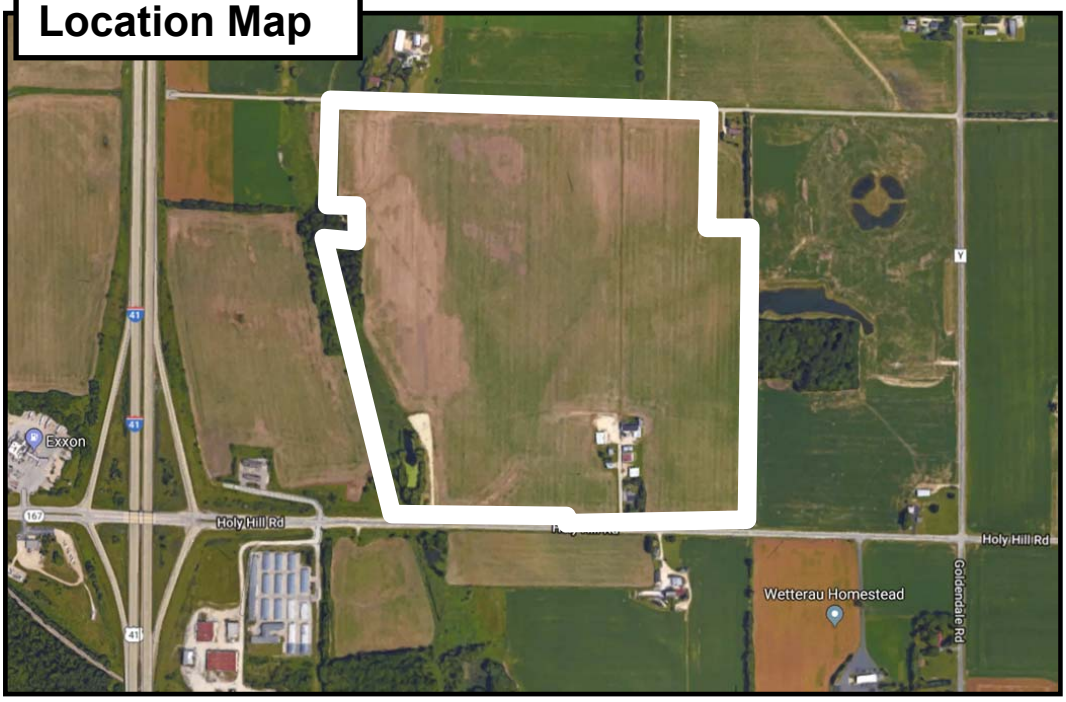

Proposal/Background

Zilber Property Group, agent for Towne Realty Inc. and Brian & Kevin Kazmierczak, Richard & Mary Stephan and Frank & Mary Wiedmeyer, property owners, are requesting approval of amendments to the Village's 2020 Future Land Use Plan Map for 224.8 acres and a rezoning application for 151.3 acres located east of US41, west of Goldendale Road, north of Holy Hill Road and south of Rockfield Road.

The following 2020 Land Use Plan (LUP) Map amendments are proposed:

- Change approximately 224.8 acres classified as "Mixed Use" to "Industrial/Office" (see Exhibit A) including the 151.3 acres owned by the Property Owners and additional land area recommended by Village staff;
- Expand the 2020 Sanitary Sewer Service Area (SSA) boundary (see Exhibit B) to include the 151.3 acres owned by the Property Owners and additional land are contiguous to the existing SSA recommended by Village staff (subject to SEWRPC & MMSD approval)

The following Zoning Code Map amendments (i.e. rezoning) are proposed:

- Change approximately 151.3 acres from A-1: Agricultural, A-2: Agricultural, Rs-1: Single-Family and Rs-2: Single-Family to M-1: Limited Industrial (see Exhibit C)

As indicated in the LUP Amendment and Rezoning applications, on behalf of the Property Owners, the Zilber Property Group is requesting these changes to facilitate the immediate construction of a 702,000 sqft industrial facility (office/warehouse) with possible expansion to 852,280 sqft, and, additional future "institutional quality" industrial development (up to 1,408,650 sqft) within their properties totaling 151.3 acres (see draft "Germantown Corporate Park - Concept Plan" Exhibit D & E).

Staff Comments

LUP Map Amendment: Land Use Classifications

As shown on the current 2020 Land Use Plan (LUP) map, the 151.3 acres of land is located within a larger area classified under (3) different land use categories intended for some form of urban/suburban development to take advantage of the accessibility to US41 and the Village's last developable interchange area.

The 151.3 acres subject of the Zilber corporate park proposal is currently classified as "MIXED USE", which was intended for a combination of commercial, office and residential uses with a general "step-down" in development intensity from the regional commercial area at the US41 interchange to multi-family land uses to the east and then single-family and agricultural land uses beyond that (east of Goldendale Road and north of Rockfield). Because the Zilber proposal is intended for relatively low-intensity corporate office and industrial uses and does not include any commercial or residential components, a LUP Map amendment to re-classify the area is required. The proposal is to amend the map classification of the area from "Mixed Use" to "Industrial/Office".

While the general trend in retail sales continues to grow, other trends are seriously changing how communities look at future commercial development. Traditional brick-and-mortar commercial businesses continue to struggle as foot traffic continues to decline. E-commerce continues to rise and consumer expectations of what the shopping experience should be varies dramatically based on generational influences, "Baby-boomers", "Gen X-ers", "Millennials" and now the tech-born "Gen-Z-ers").

Other industry-specific changes in both the regional and local economy that cannot be ignored are the direct and indirect effects of the $10 billion Foxconn investment and development in Racine County. It's well documented that such large investments in the local and regional economy create additional economic activity generated by Foxconn's suppliers, employees, spillovers to existing firms, and potential spinoffs resulting from such development. Spillover effects, both good and not so good, in the form of new and expanded businesses, as well as, relocating businesses affected by increases in employee wages and decreases in the labor supply, are or will affect industrial markets throughout Wisconsin, including Washington County and Germantown.

In light of these changes, as well as, continuing local attitudes (negatively) toward "Big Box" retailers, multi-family apartments and other high-density residential land uses, all of which having changed significantly since the original 2020 Plan was adopted in 2004, the proposed amendment to the basic land use classifications from "Mixed Use" to "Industrial/Office" for the Holy Hill Road corridor appear both reasonable and warranted if the Village wants to be leverage the opportunities of accessibility and land availability along the last "developable" interchange in the Village. To that end, Village staff is recommending that, in addition to the 151.3 acre Zilber properties, an additional 73.5 acres of land also be included in the "Mixed Use" to "Industrial/Office" classification amendment.

LUP Map Amendment: Sewer Service Area (SSA) Boundary

In addition to the LUP Map classification amendment, and as a prerequisite for any/all development in the Holy Hill Road area, regardless of its LUP Map classification, Zilber is requesting an expansion of the Village's Sanitary Sewer Service Area (SSA) to include the 151.3 acres. To do so, the Village has expanded the potential SSA to include: (1) the minimum land area necessary to accommodate the physical extension of the sewer and water facilities and maintain contiguity with the existing SSA boundary along Goldendale Road south of the WSOR railroad (that is currently being extended north from Freistadt Road as a result of the Speaker Corporation campus expansion and Tax Incremental District #7 improvements); and (2) the maximum area and level of expected development that can be served by the size and location of the sewer and water facilities to be extended to and within the area.

With that said, other land owners within the area, both north and south of Holy Hill Road east of US41 have expressed their desire to have their land included within the proposed SSA expansion. Such requests are likely to be considered by Village staff and the Village Board prior to final action on the current LUP Map amendment, or, in the future as actual development proposals for those other properties are presented to the Village.

Tax Incremental District (TID#8)

Along with but not necessarily part of the actual LUP Map and rezoning amendment applications being considered, there is a companion request by the Zilber Group for the Village to create a Tax Incremental District (TID) to help finance the infrastructure improvements and incentives necessary for development to occur in this area. Consideration of the creation of TID#8 by the Plan Commission is a separate but dependent proposal.

Zoning Code Map Amendment: M-1: Limited Industrial Rezoning
The LUP Map classification and SSA boundary amendments are necessary prerequisites for the Zoning Code amendment to change the zoning map designation for the 151.3 acres from the districts to the M-1: Limited Industrial Zoning District. The M-1 District is the Village's zoning district for corporate office and industrial development, as is the case with our Germantown Business Park and Willow Creek Business Park. The concept plan in Exhibits D & E generally depict how the 151.3 acres of land is intended to develop in Phase 1 (Exhibit E) and at buildout (Exhibit D), subject to the review and approval of detailed site development and building plans by the Plan Commission. If the LUP Map and Zoning Code amendments are approved by the Villager Board (tentatively scheduled for public hearing and action on June 18), detailed plans for Phase 1 of the overall development, including the initial 702,000 sqft office/warehouse building will be submitted for plan Commission review/approval in July.

VILLAGE PLANNER RECOMMENDATION:
2020 LUP Map Amendments

APPROVE the proposed 2020 Land Use Plan (LUP) map amendments to change approximately 224.8 acres classified as "Mixed Use" to "Industrial/Office" (Exhibit A); and to expand the 2020 Sanitary Sewer Service Area (SSA) boundary to include the 151.3 acres owned by the Property Owners and additional land are contiguous to the existing SSA recommended by Village staff (Exhibit B).

VILLAGE PLANNER RECOMMENDATION:
Rezoning

APPROVE the proposed rezoning of approximately 151.3 acres from A-1: Agricultural, A-2: Agricultural, Rs-1: Single-Family and Rs-2: Single-Family to M-1: Limited Industrial subject to the following:

1. Rezoning of the properties totaling 151.3 acres is subject to approval of the proposed LUP Map amendments and creation of the proposed Tax Incremental District No. 8.

EXHIBIT A

Village of Germantown Properties subject of a 2020 Land Use Plan Map Amendment to
Change classification from "Mixed Use" to "Industrial/Office"

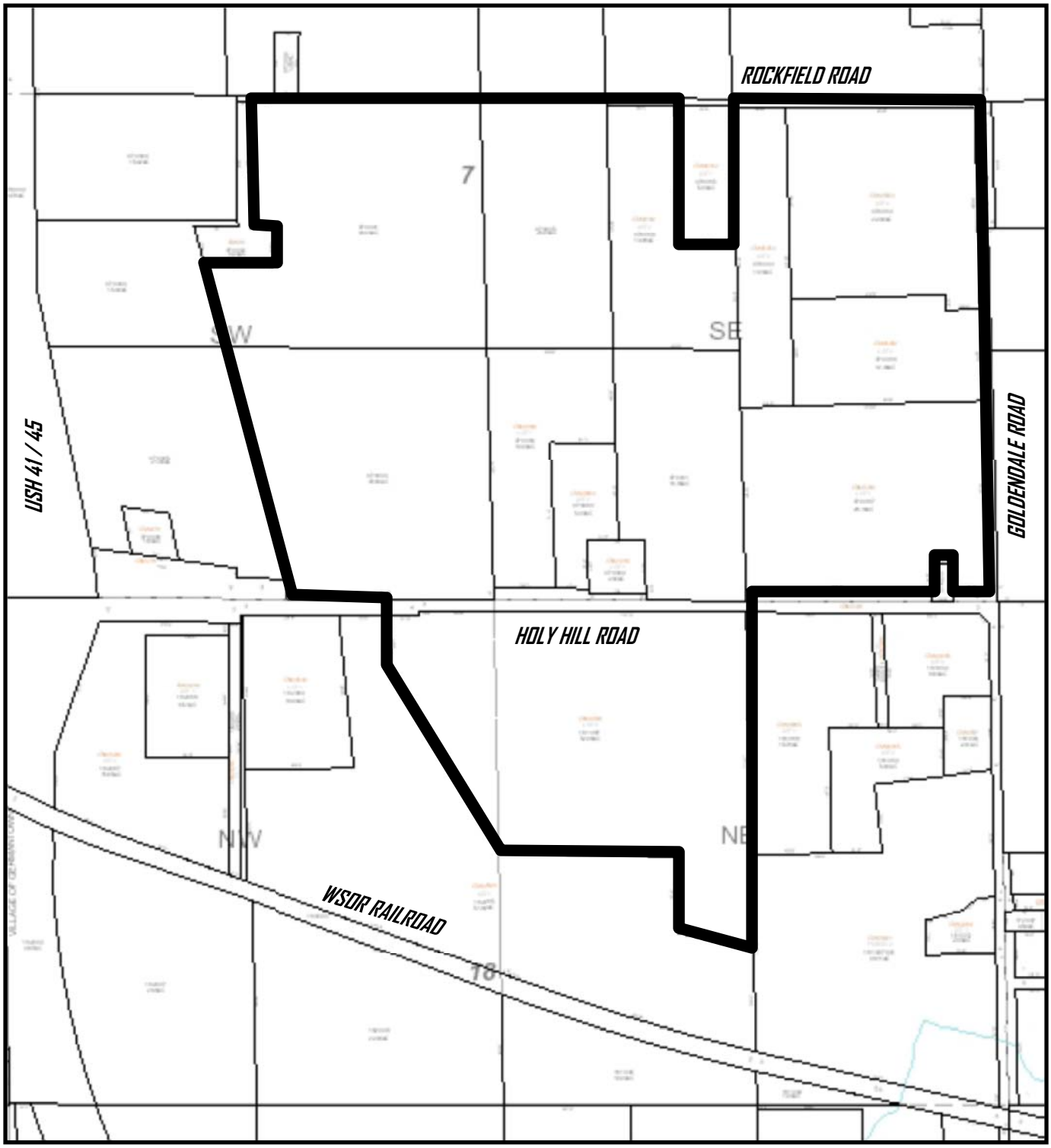

EXHIBIT B

Village of Germantown Properties subject of a 2020 Land Use Plan Map Amendment to
Expand the Sanitary Sewer Service Area (SSA)

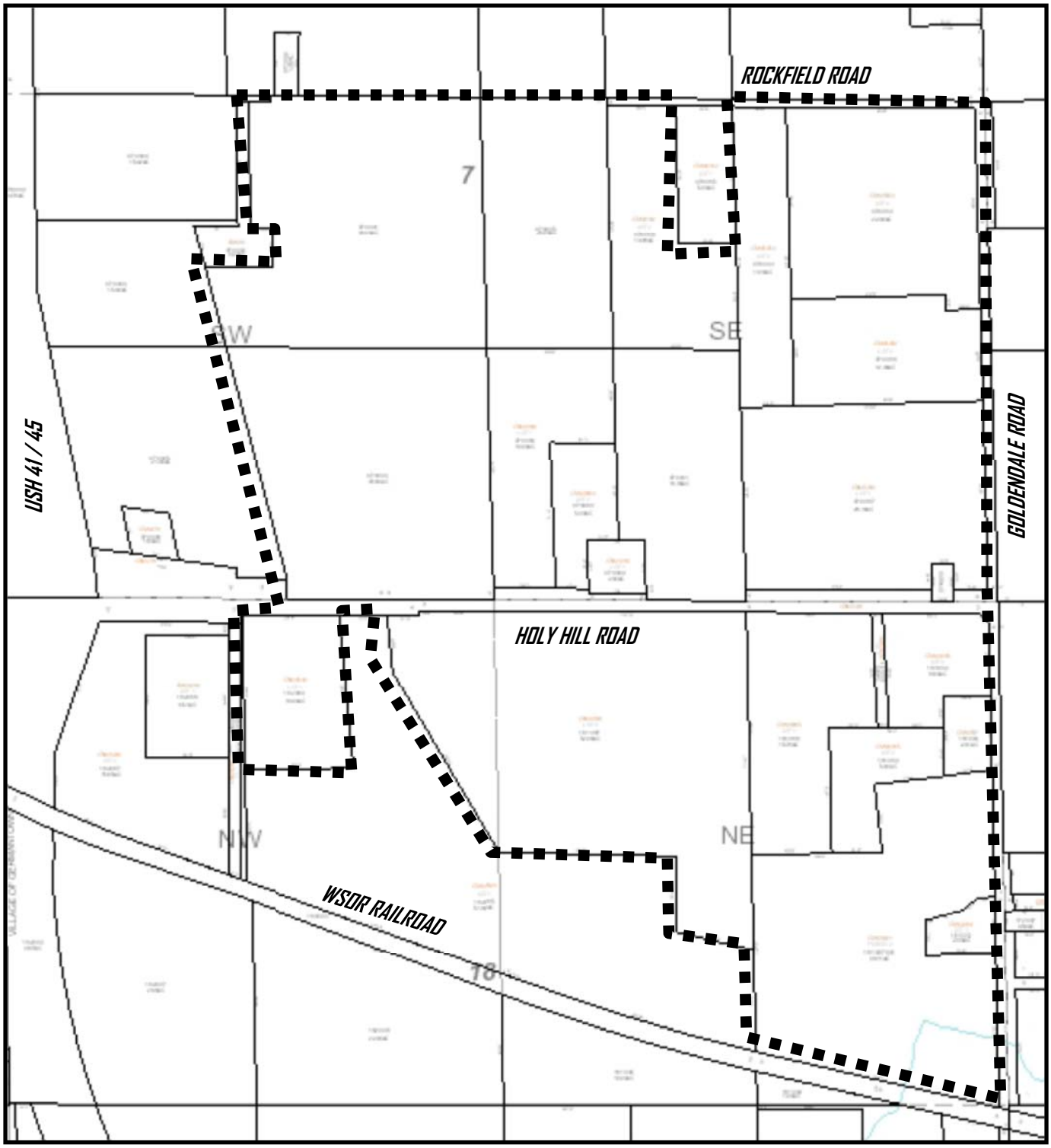

EXHIBIT C

Village of Germantown Properties subject of a Zoning Code Map amendment to
Rezone from the A-1: Agricultural, A-2: Agricultural, Rs-1: Single-Family & Rs-2: Single-Family Districts
to the M-1: Limited Industrial District

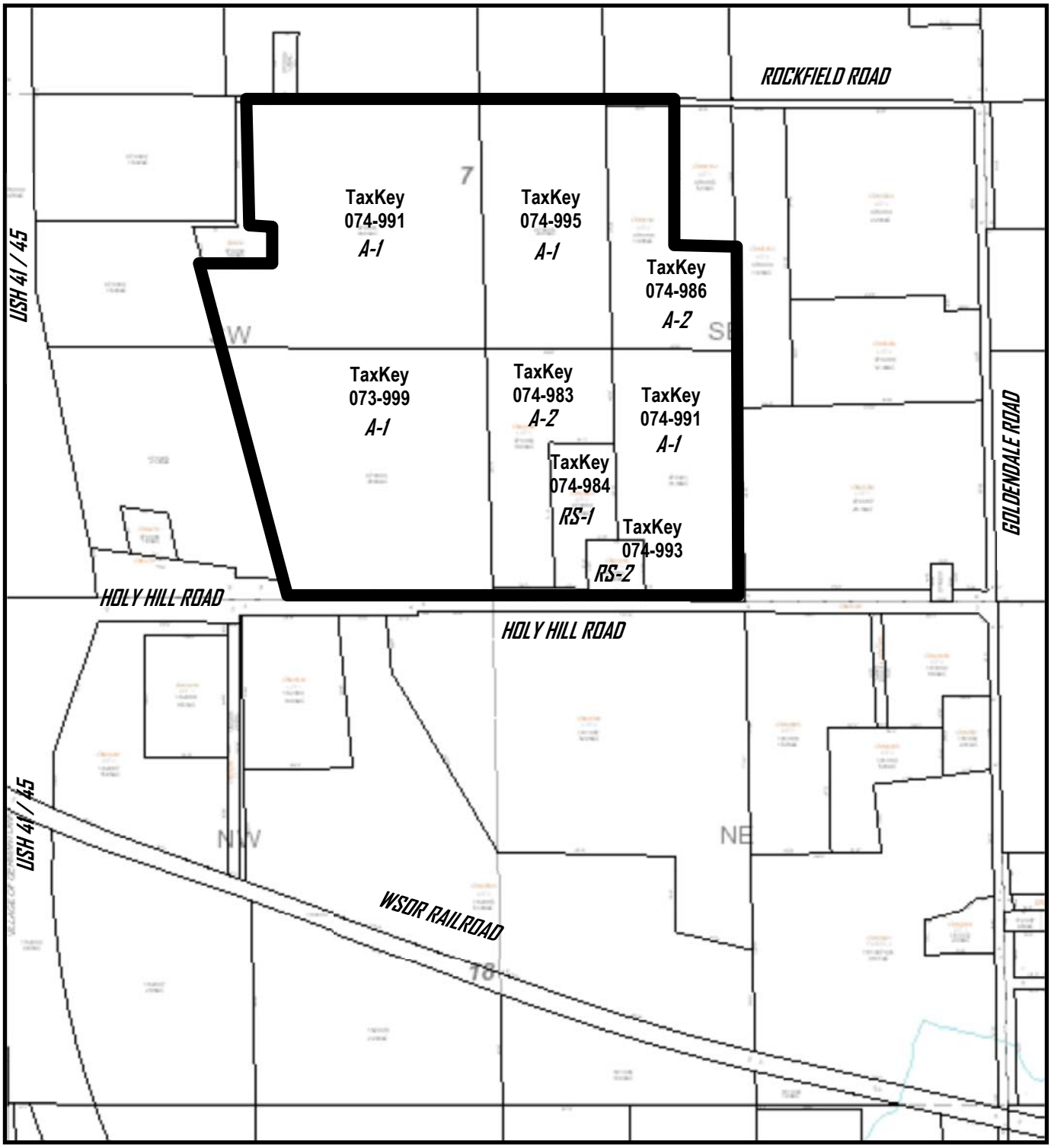

EXHIBIT D

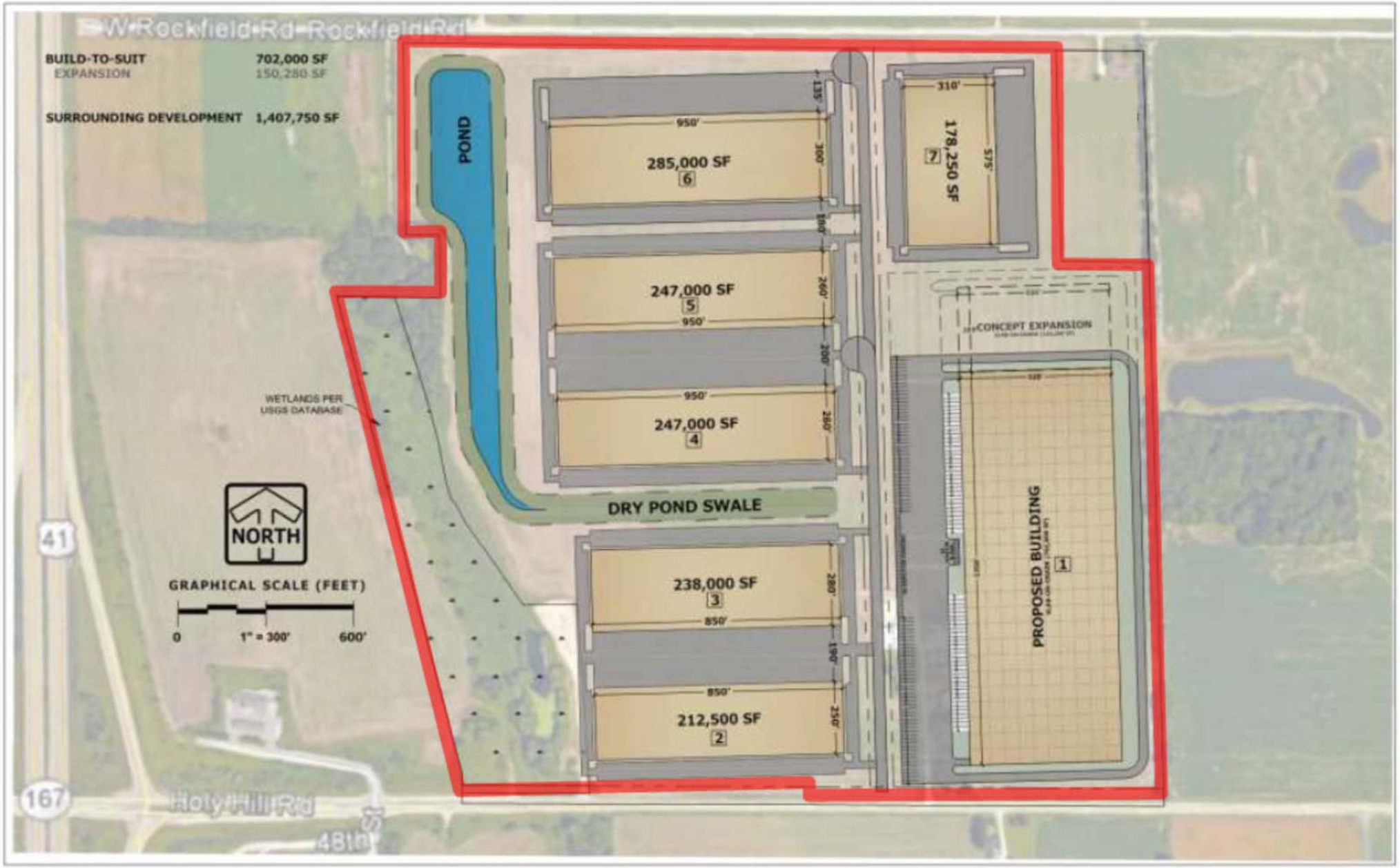

GERMANTOWN CORPORATE PARK - CONCEPT PLAN DRAFT | GERMANTOWN, WI 05/17/2018

PINNACLE ENGINEERING GROUP

15850 W. BLUEMOUND ROAD | SUITE 210 | BROOKFIELD, WI 53005 | WWW.PINNACLE-ENGR.COM | ADMIN@PINNACLE-ENGR.COM

PLAN | DESIGN | DELIVER

EXHIBIT E

GERMANTOWN CORPORATE PARK - CONCEPT PLAN DRAFT | GERMANTOWN, WI 05/17/2018

PINNACLE ENGINEERING GROUP

15850 W. BLUEMOUND ROAD | SUITE 210 | BROOKFIELD, WI 53005 | WWW.PINNACLE-ENGR.COM | ADMIN@PINNACLE-ENGR.COM

PLAN | DESIGN | DELIVER

Village of
Germantown
...Willkommen

Fee Must Accompany Application

☒ $1,165 Paid [illegible] Date 5-9-18

☐ $200 PC Consultation Only

Paid _____ Date _____

COMPREHENSIVE PLAN AMENDMENT APPLICATION

Please read and complete this application carefully. All applications must be signed and dated. Attach additional sheets and/or include supplemental information in support of your application.

APPLICANT OR AGENT:
TOWNE REALTY, INC. D/B/A ZILBER PROPERTY GROUP
ATTN: JASON LUEDERS
Address: 9560 58TH PLACE, SUITE 350
KENOSHA, WI 53144
Phone: 414-274-2641
FAX:
E-Mail: JASON.LUEDERS@ZILBER.COM

PROPERTY OWNER(S):
SEE ATTACHED PROPERTY OWNER(S) SUMMARY
Address:
Phone:
FAX:
E-Mail:

☒ **REQUEST TO AMEND LAND USE MAP**

Current Land Use Map Designation(s): AG

Proposed Land Use Map Designation(s): M-1 LIMITED INDUSTRIAL DISTRICT

Address of Property, Parcel ID Number(s) or General Location (¼ section ¼ section):

SEE ATTACHED PROPERTY OWNER(S) SUMMARY

Legal Description of Property or Area (metes and bounds description):

Attach separate legal description if necessary

SEE ATTACHED PROJECT AREA MAP

PLEASE NOTE THE NUMBERS ON THE PROJECT AREA MAP CORRELATE WITH PARCELS NOTED ON THE PROPERTY OWNER(S) SUMMARY

Size of Property or Area: Acres: 151.31 Square Feet: 6,591,064

Land Use and Zoning of Adjacent Properties (example: residential; Rs-2):

VILLAGE OF GERMANTOWN TO COMPLETE

Adjacent Property Land Uses		Zoning
North		
South		
East		
West		

~~☐ REQUEST TO AMEND PLAN TEXT~~

~~Section(s) of Comprehensive Plan to be Amended:~~

~~Proposed Text Amendment:~~

Attach separate pages as necessary

Detailed Explanation and Justification for Proposed Amendment(s):

Required for both Land Use Amendment and Text Amendments
Attach separate pages as necessary

A REQUEST TO AMENDMENT TO THE 2020 LAND USE PLAN MAP IS BEING MADE IN CONJUNCTION WITH AN APPLICATION TO REZONE THE PROPERTY CONTAINED IN THE PROJECT AREA FROM AGRICULTURAL TO M-1 LIMITED INDUSTRIAL DISTRICT CLASSIFICATION TO FACILITATE THE IMMEDIATE CONSTRUCTION OF A 700,000 ± SF INDUSTRIAL FACILITY, AS WELL AS THE FUTURE DEVELOPMENT OF UP TO AN ADDITIONAL 1,400,000 ± SF OF INSTUTIONAL-QUALITY INDUSTRIAL SPACE WITHIN THE PROJECT AREA.

THE CURRENT MIXED-USE CLASSIFICATION IDENTIFIED FOR THE PROJECT AREA NOTED IN THE 2020 LAND USE PLAN PROVIDES FOR COMMERICAL, RETAIL AND RESIDENTIAL USES, HOWEVER THE PROPOSED LAND USE IS INDUSTRIAL. CONSEQUENTLY, THE LAND USE PLAN MUST BE CHANGED FROM MIXED-USE TO INDUSTRIAL.

APPLICATION SUBMITTAL REQUIREMENTS (to be submitted at time of application):

All Amendment Applications:

- ☒ Complete Application Form (Affidavit of Understanding and signatures required)
- ☒ Application Fee
- ☐ Additional Sheet(s) for explanation of and justification for proposed amendment(s)

Land Use Plan Map Amendment Only:

- ☒ Legal Description of the land subject of map amendment in electronic/digital file format (e.g. Microsoft Word)
- ☒ Detailed Plat of Survey or Site Plan of the land subject to the map amendment at a scale of 1" = 50' or other suitable scale necessary to accurately present:
  - Exterior boundary of the land subject of the map amendment
  - Concept plan showing general size, shape and relative location of existing and future roads, lots, structures, wetlands, floodplain or other natural features, environmental etc. as may be necessary to further explain and/or support the proposed map amendment.

SEE ATTACHED PROPERTY OWNER(S) SUMMARY, PROJECT AREA MAP AND CONCEPT SITE PLAN & LOCATION MAP

AFFIDAVIT OF UNDERSTANDING

Please read and indicate that you understand and agree to the following (initials in box):

SL I understand that Village Staff, the Plan Commission and/or the Village Board may request additional information to properly evaluate this application and failure to provide such information may be sufficient justification to deny this application;

SL I understand that, regardless of the justification and/or information provided in support of my application, the Village is under no obligation to approve my application nor amend the Comprehensive Plan as requested;

SL I am aware that the approval of an application to amend the Land Use Plan Map only amends the Land Use Map and does not otherwise revise or change the zoning of the land affected by the Map amendment, and, if I am applying for a Map amendment in order to pursue actual development of the land affected by the amendment, I may be required to obtain separate permits and/or approvals (e.g. rezoning, land division, site plan, etc.) from the Village or other agencies as a prerequisite to the development of such land.

ALL APPLICATIONS MUST BE SIGNED BY THE APPLICANT/AGENT AND PROPERTY OWNER(S)

Applicant/Agent	5/8/17 Date	SEE ATTACHED LETTER FROM PROPERTY OWNER(S) Property Owner	Date
Applicant/Agent	Date	Property Owner	Date

Village of Germantown
...Willkommen

FEES MUST BE PAID AT TIME OF APPLICATION

- ☐ $200 Plan Commission Consultation
- ☒ $1,085 Rezoning
- ☐ $1,240 PDD < 5 acres
- ☐ $2,095 PDD 5-20 acre site
- ☐ $3,460 PDD > 20 acre site

Date Paid: 5-9-18 Received by: [illegible]

REZONING & PDD APPLICATION

Pursuant to Section 17.51 of the Municipal Code

Please read and complete this application carefully. **All applications must be signed and dated.**

1 APPLICANT OR AGENT

TOWNE REALTY, INC. D/B/A ZILBER PROPERTY GROUP
9560 58TH PLACE, SUITE 350
KENOSHA, WI 53144
ATTN: JASON LUEDERS
Phone ( ) 414-274-2641
Fax ( )
E-Mail JASON.LUEDERS@ZILBER.COM

PROPERTY OWNER

SEE ATTACHED PROPERTY OWNER(S) SUMMARY
Phone ( )

2 PROPERTY ADDRESS OR GENERAL LOCATION / TAX KEY NUMBER

PROPERTY ADDRESS OR GENERAL LOCATION	TAX KEY NUMBER
SEE ATTACHED PROPERTY OWNER(S) SUMMARY	

3 REZONING REQUEST

FROM	TO
AG	M-1 LIMITED INDUSTRIAL DISTRICT

4 METES AND BOUNDS LEGAL DESCRIPTION OF PROPERTY – REQUIRED

Attach pages as necessary

SEE ATTACHED PROJECT AREA MAP

PLEASE NOTE THE NUMBERS ON THE PROJECT AREA MAP CORRELATE WITH PARCELS NOTED ON THE PROPERTY OWNER(S) SUMMARY

5

PURPOSE OF REZONING REQUEST

Briefly describe why the applicant is rezoning the property. Include a description of the proposed use, including any new construction and number of employees, if applicable

REZONING OF THE PROPERTY FROM AGRICULTURE TO M-1 LIMITED INDUSTRIAL DISTRICT IS REQUIRED TO FACILITATE THE IMMEDIATE CONSTRUCTION OF A 700,000 ± SF INDUSTRIAL FACILITY, AS WELL AS THE FUTURE DEVELOPMENT OF UP TO AN ADDITIONAL 1,400,000 ± SF OF INSTUTIONAL-QUALITY INDUSTRIAL SPACE.

6 SUPPORTING DOCUMENTATION:

- ☒ Plat of Survey (1:100)
  SEE ATTACHED PROJECT AREA MAP
- ☒ Site Plan and elevations for new construction (can be conceptual)
  SEE ATTACHED CONCEPT SITE PLAN & LOCATION MAP AND CONCEPT ELEVATIONS
- ☐ _____
- ☐ _____

7 READ AND INITIAL THE FOLLOWING:

JL I understand that the Village is under no obligation to rezone property and that density and lot coverages provided in the Zoning Code are maximums. Actual build out will depend on myriad factors including topography and other natural conditions, surrounding neighborhood context and the detailed design of a project.

JL I understand that Village Staff, Plan Commission and/or Village Board may request additional information to properly evaluate this request and failure to provide such information may in itself by sufficient cause to deny the petition.

JL I am aware that this rezoning shall go into effect immediately upon the final approval of the Village Board and its execution of the rezoning ordinance (PER ATTACHED PROPERTY OWNER LETTER)

8 SIGNATURES – ALL APPLICATIONS MUST BE SIGNED BY OWNER!

Applicant 5/8/18 Date

SEE ATTACHED LETTER FROM PROPERTY OWNER(S)
Owner Date

May 4, 2018

The Honorable Village President
and Members of the Village Board
Germantown, WI, 53022

Dear Village President and Members of the Village Board:

We are the owner of the property listed below. Towne Realty, Inc.,("Towne"), has certain contract rights to purchase the property. We consent to Towne's application to rezone the property located at Parcel Numbers: GTNV 073991, GTNV 073999, GTNV 074995, GTNV 074991, GTNV 074986 and GTNV 074983, from A-1 Agricultural to M-1 Limited Industrial District, provided that no rezoning is final until Towne or its assigns has taken title to the Property.

The purpose of the rezoning is to permit industrial uses in conformity with M-1 Zoning for the land.

Towne has attached, in their submittal, its conceptual development plan including building and site development, as required by Section 17.43 of the Village of Germantown Zoning Ordinance, and a receipt of the rezoning fee. Towne understand that development of the referenced property proposed for rezoning is required to be consistent with the conceptual development plans submitted with their rezoning petition.

Please inform me and Towne Realty, Inc., of the date this item will be reviewed by the City Plan Commission. The meeting notice should be sent to *W202 N1420 Merkel Drive, Germantown, WI 53022* and to *TOWNE REALTY, INC., ATTN: CHAD NAVIS, 710 N. PLANKINTON AVE., MILWAUKEE, WI, 53203.*

If you any questions regarding the rezoning please contact Chad Navis at *414-274-2642.*

Sincerely,

Brian A. Kazmierczak

Kevin J. Kazmierczak

May 4, 2018

The Honorable Village President
and Members of the Village Board
Germantown, WI, 53022

Dear Village President and Members of the Village Board:

We are the owner of the property listed below. Towne Realty, Inc.,("Towne"), has an interest in pursuing certain contract rights to purchase the property. We consent to Towne's application to rezone the property located at Parcel Numbers: GTNV 074984, from A-1 Agricultural to M-1 Limited Industrial District, provided that no rezoning is final until Towne or its assigns has taken title to the Property.

The purpose of the rezoning is to permit industrial uses in conformity with M-1 Zoning for the land.

Towne has attached, in their submittal, its conceptual development plan including building and site development, as required by Section 17.51 of the Village of Germantown Zoning Ordinance, and a receipt of the rezoning fee. Towne understand that development of the referenced property proposed for rezoning is required to be consistent with the conceptual development plans submitted with their rezoning petition.

Please inform me and Towne Realty, Inc., of the date this item will be reviewed by the City Plan Commission. The meeting notice should be sent to *N128W21030 Holy Hill Rd, Richfield, WI 53076* and to *TOWNE REALTY, INC., ATTN: CHAD NAVIS, 710 N. PLANKINTON AVE., MILWAUKEE, WI, 53203.*

If you any questions regarding the rezoning please contact Chad Navis at 414-*274-2642.*

Sincerely,

Richard A Stephan

Richard A Stephan

May 8, 2018

The Honorable Village President
and Members of the Village Board
Germantown, WI, 53022

Dear Village President and Members of the Village Board:

We are the owner of the property listed below. Towne Realty, Inc.,("Towne"), has an interest in pursuing certain contract rights to purchase the property. We consent to Towne's application to rezone the property located at Parcel Numbers: GTNV 074993, from A-1 Agricultural to M-1 Limited Industrial District, provided that no rezoning is final until Towne or its assigns has taken title to the Property.

The purpose of the rezoning is to permit industrial uses in conformity with M-1 Zoning for the land.

Towne has attached, in their submittal, its conceptual development plan including building and site development, as required by Section 17.51 of the Village of Germantown Zoning Ordinance, and a receipt of the rezoning fee. Towne understand that development of the referenced property proposed for rezoning is required to be consistent with the conceptual development plans submitted with their rezoning petition.

Please inform me and Towne Realty, Inc., of the date this item will be reviewed by the City Plan Commission. The meeting notice should be sent to *W204 N13164 Goldendale Rd, Richfield, WI* and to *TOWNE REALTY, INC., ATTN: CHAD NAVIS, 710 N. PLANKINTON AVE., MILWAUKEE, WI, 53203.*

If you any questions regarding the rezoning please contact Chad Navis at 414-*274-2642.*

Sincerely,

Frank E Wiedmeyer Jr.

Frank E Wiedmeyer Jr

ZILBER
PROPERTY GROUP℠

May 8, 2018

Village of Germantown
Rezoning & Comprehensive Plan Amendment Application Parcel Information

Applicant:

Towne Realty, Inc. D/B/A Zilber Property Group
9560 58th Place, Suite 650
Kenosha, WI 53144
Contact: Jason Lueders
Phone: 414-274-2641
Email: jason.lueders@zilber.com

1. Property Owner(s) Summary:

PARCEL		CONTACT	DESCRIPTION	ACRES
1	GTNV_073999	BRIAN A KAZMIERCZAK, KEVIN J KAZMIERCZAK W202N11420 MERKEL DR GERMANTOWN WI 53022	PT SE SW DOC 1308664 SEC 7-9-20	37.30 AC
2	GTNV_073991	BRIAN A KAZMIERCZAK, KEVIN J KAZMIERCZAK W202N11420 MERKEL DR GERMANTOWN WI 53022	PT N1/2 SW+PT CSM 51 DOC 1308664 SEC 7-9-20	40.90 AC
3	GTNV_074995	BRIAN A KAZMIERCZAK, KEVIN J KAZMIERCZAK W202N11420 MERKEL DR GERMANTOWN WI 53022	W1/2 NW SE DOC 1308664 SEC 7-9-20	20.00 AC
4	GTNV_074983	BRIAN A KAZMIERCZAK, KEVIN J KAZMIERCZAK W202N11420 MERKEL DR GERMANTOWN WI 53022	W 1/2 SW SE CSM 6660 LOT 1 DOC 1308664	13.09 AC
5	GTNV_074986	BRIAN A KAZMIERCZAK, KEVIN J KAZMIERCZAK W202N11420 MERKEL DR GERMANTOWN WI 53022	PT OF NW SE CSM 6182 LOT 2 DOC 1308664	14.38 AC
6	GTNV_074991	BRIAN A KAZMIERCZAK, KEVIN J KAZMIERCZAK W202N11420 MERKEL DR GERMANTOWN WI 53022	E1/2 SW SE (EXC CSM 1963) DOC 1308664	18.64 AC
7	GTNV_074984	RICHARD A STEPHAN, MARY K STEPHAN N128W21030 HOLY HILL RD RICHFIELD WI 53076	W 1/2 SW SE CSM 6660 LOT2 DOC 1396801	05.00 AC
8	GTNV_074993	FRANK E WIEDMEYER, MARY J WIEDMEYER W204N13164 GOLDENDALE RD RICHFIELD WI 53076	CSM 1963 PT SW SE DOC 1271133+1391655	02.00 AC
			TOTAL PROJECT AREA ACRES:	151.31 AC

PROJECT AREA MAP

ATTACHMENT TO REZONING & COMPREHENSIVE PLAN AMENDMENT APPLICATIONS - DATED 05/08/2018

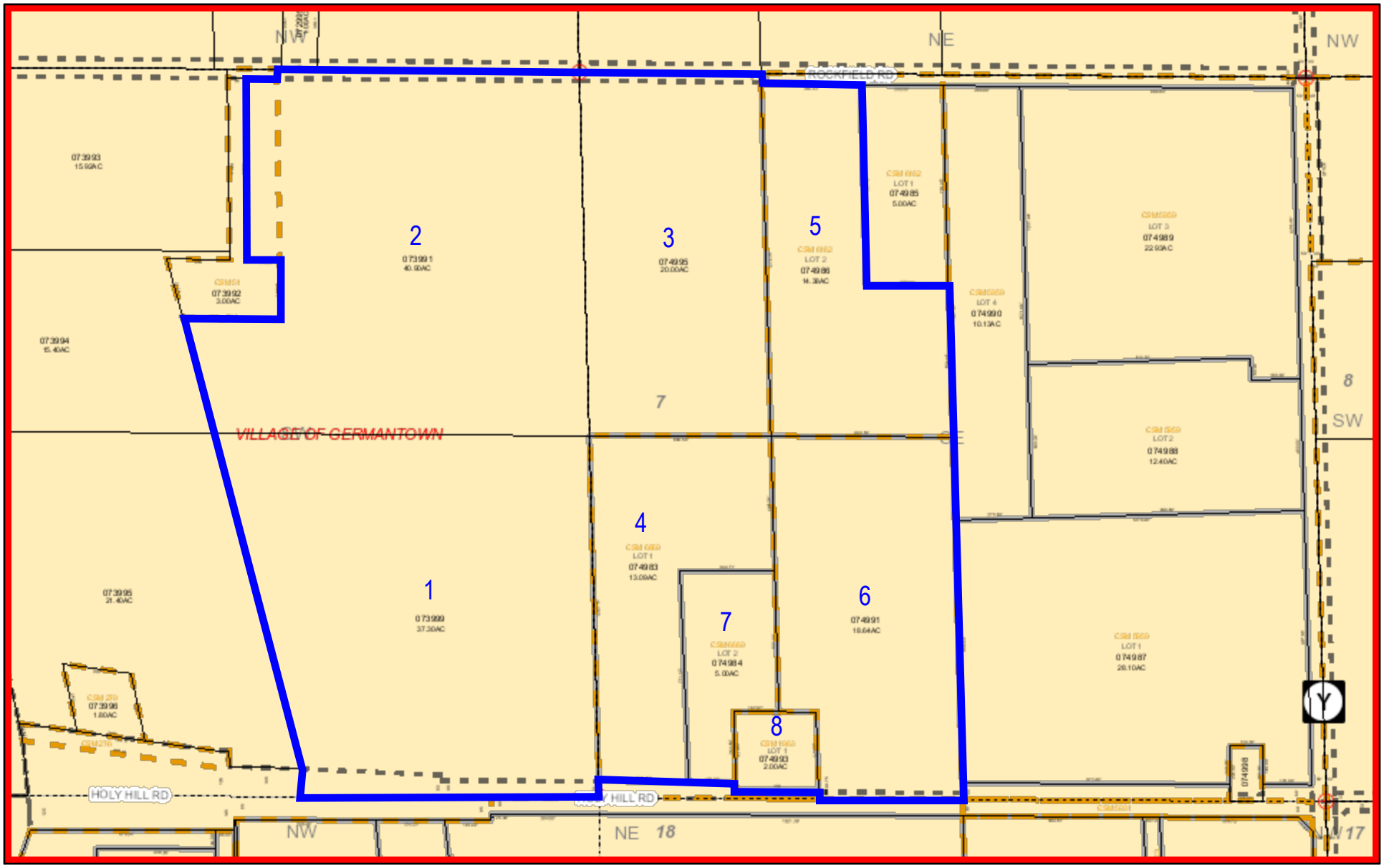

May 8, 2018

1:6,000

0 0.05 0.1 0.2 mi

0 0.07 0.15 0.3 km

Washington County GIS, Washington County

CountyBoundary

City, Village or Town Hall

Libraries

Washington County Landmarks

Airports

Trails

Public Open Spaces

Current Parcel

Landhook

Meander Line

PLSS Monument

PLSS Boundary

ArcGIS WebApp Builder

CONCEPT SITE PLAN & LOCATION MAP

ATTACHMENT TO REZONING & COMPREHENSIVE PLAN AMENDMENT APPLICATIONS - DATED 05/08/2018

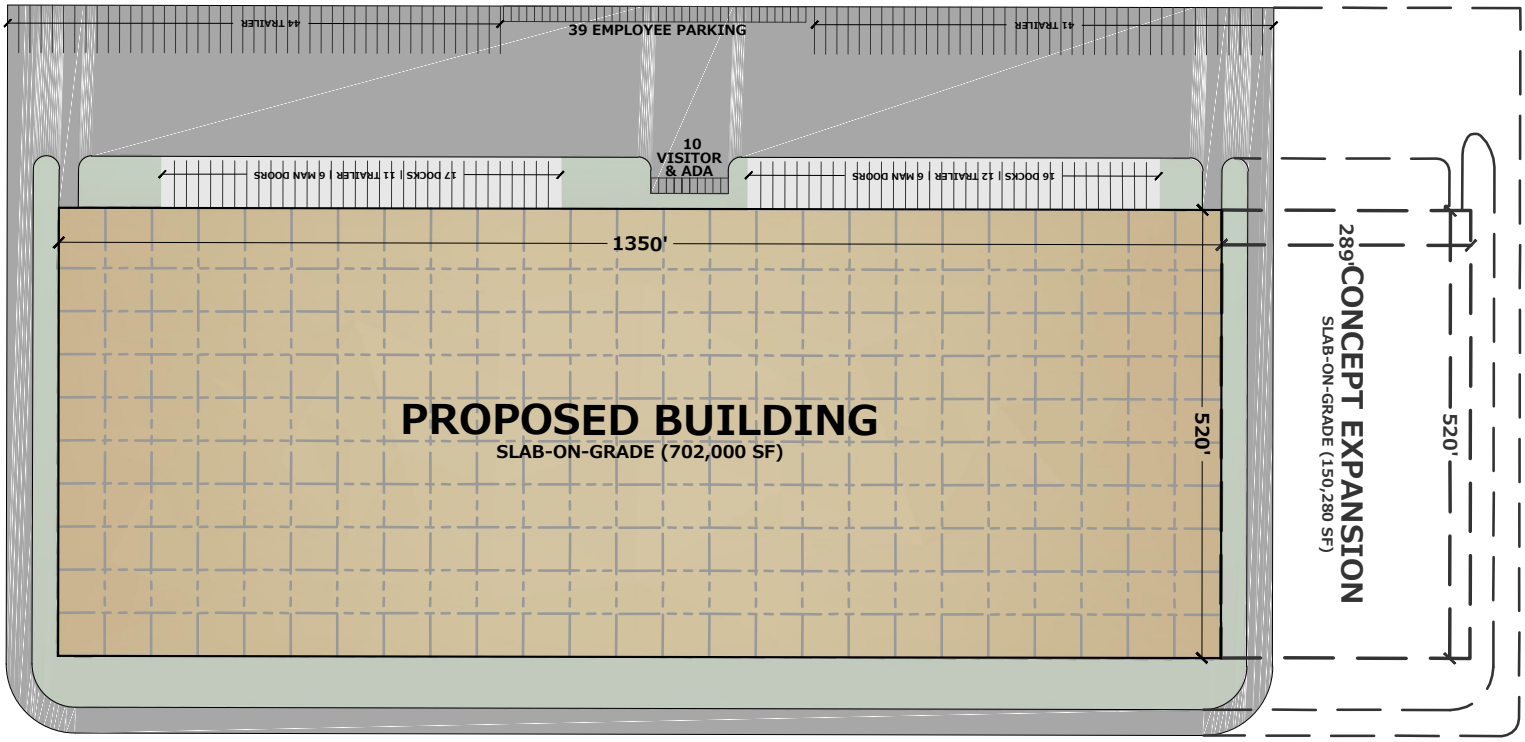

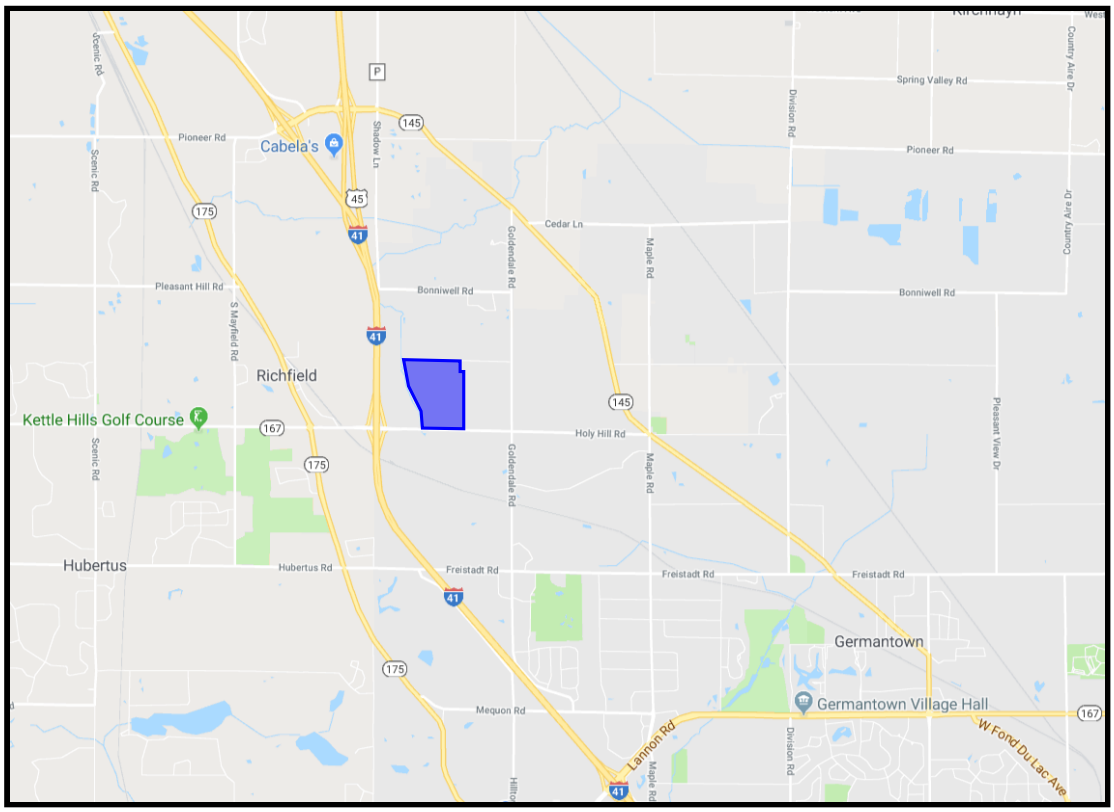

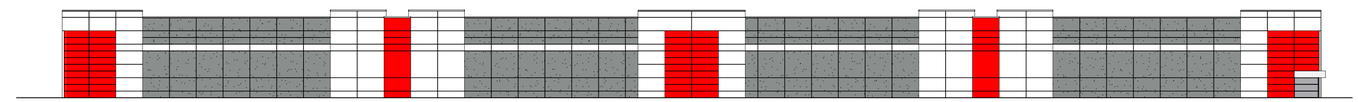

SIDE ELEVATION

CONCEPT BUILDING ELEVATIONS

GERMANTOWN, WISCONSIN

ZILBER PROPERTY GROUP℠

STEPHEN PERRY SMITH ARCHITECTS, INC.

SITE PLAN REVIEW

6/11/18 Plan Commission Meeting

Pinnacle Engineering Group / Wacker Neuson

Village Planner Report **Germantown, Wisconsin**

Summary

Brian Johnson, Pinnacle Engineering, agent for Wacker Neuson Logistics Americas LLC, property owner and Wacker Neuson, is seeking approval of site development & building plans for a 107,910 sqft outdoor storage area, a 6,000 sqft canopy-covered storage area, truck loading area and site improvements for the existing facility located W180 N11691 River Lane in the Germantown Industrial Park.

Location: W180 N11691 River Lane

Applicant/ Owner:

Brian Johnson	Kristine Zehren
Pinnacle Engineering	Wacker Neuson
1051 E. Main St	W180 N11691 River Lane
East Dundee, IL	Germantown WI

Current Zoning: M-1: Limited Industrial

Adjacent Land Uses		Zoning
North	Industrial	M-1
South	Industrial	M-1
East	Residential (Blackstone Creek)	Rd-2/PDD
West	Industrial	M-1

Background/Proposal

Brian Johnson, Pinnacle Engineering, agent for Wacker Neuson Logistics Americas LLC, property owner and Wacker Neuson, is seeking approval of site development & building plans for a 107,910 sqft outdoor storage area, a 6,000 sqft canopy-covered storage area, truck loading area and site improvements for the existing facility located W180 N11691 River Lane in the Germantown Industrial Park.

The subject parcel is 17.5 acres in area with an existing 154,500 sqft office/warehouse building. As presented in the site plans, the proposed storage additions and site improvements include the following features:

- 107,910 sqft asphalt paved outdoor storage yard w/ 8' high chain link security fence with gray privacy slats around the perimeter, motorized gate and pole-mounted lighting
- A curbed and paved truck/trailer parking and loading area w/ mobile ramps adjacent to the fenced storage yard
- A 6,000 sqft concrete paved "lean-to" covered storage area w/ "ash gray" colored metal roof adjacent to west elevation of existing building (approx. 30' roof height)
- On-site storm water detention basins
- Elevated berm & landscaped buffer in southwest portion of property frontage along Morse Drive

Access & Parking. The expanded storage yard will be served by the existing access driveway on Morse Drive. No changes are proposed to the existing parking areas on the east side of the building; no new parking stalls are proposed.

Storm Water Management. A total of 121,210 sqft of additional impervious surfaces are proposed as part of the project for a total of 402,083 sqft or 52.6% of the total 17.5-acre site leaving 47.4% in open/green space and storm water basins. The site is served by a regional storm water basin located east of the site in the Blackstone Creek development. Additional storm sewer will be installed to convey run-off from the storage yard to two (2) on-site storm water detention basins and then to the existing storm sewer in both Fulton Drive (north) and Morse Drive (south) and eventually to the off-site regional basin.

Landscaping. Additional landscaping is comprised of street trees and an elevated, landscaped screening berm in the southwest corner of the property. Deciduous shade and ornamental trees, evergreen trees, and deciduous and evergreen shrubs are proposed in this area. A total of (3) additional street trees will be installed along the frontage of Morse Drive to supplement the existing trees and provide additional screening of the new storage yard. As indicated above, the 8' high security fence will include gray privacy slats for screening. The existing landscaped area adjacent to the west elevation of the building south of the proposed metal canopy storage area will be protected and preserved for screening.

Lighting. Exterior lighting of the storage yard includes a total of (18) 143W LED 4000K cut-off fixtures mounted on free-standing poles at a height of 23' (20' poles with a 3' concrete base) inside the storage yard.

Signage. No new or additional signage is proposed.

Staff Analysis/Comments
The zoning for this parcel in the Industrial Park is M-1: Limited Industrial. Subject to the staff recommended conditions herein, the proposed development plans comply with the M-1: Limited Industrial Zoning district regulations.

Fire Department/Police Department
The Fire Department has recommended approval of the storage yard and site improvements as proposed.

Engineering/Public Works
The Village Engineer has signed off on the few minor issues that were previously identified in his June 5, 2018 memo (copy attached).

Inspection Services
Inspection Services has indicated that state-approved plans will be required prior to issuing a building permit along with the required $20,000 occupancy bond.

Village Planner Recommendation

APPROVE the site development & building plans for the 107,910 sqft outdoor storage yard, 6,000 sqft canopy-covered storage area and site improvements for the existing facility located W180 N11691 River Lane in the Germantown Industrial Park subject to the following conditions:

1. This approval is subject to all the conditions and requirements set forth herein and adopted by the Plan Commission. Approval is granted for the site development and building plans with a revision date May 10, 2018 unless superseded by subsequent plan sheets approved by the Village Planner pursuant to revisions required herein and/or by the Plan Commission.
2. All landscaping, screening, grading, and paving improvements shown on the approved site plans shall be installed as proposed prior to issuance of an occupancy permit unless a cash bond or letter of credit in an amount equal to 120 percent of the estimated installation and material costs reviewed and approved by the Village is submitted to the Village as necessary to ensure that installation of the proposed features and improvements will be completed within one (1) year after issuance of the occupancy permit.
3. State approved plans and a $20,000 occupancy bond are required by the Building Inspection Department as part of the building permit application.

Engineering Department Memorandum

To : Larry Ratayczak, Public Works Director

From : Eric Nitschke, Village Engineer

Date : June 5, 2018

Re :Development Review for June 11 Plan Commission

Larry,

Included you will find the review comments pertaining to the Plan Commission Agenda on June 11, 2018 from myself and staff for the following:

Wacker Neuson, W180 N11691 River Lane. Site Plan Review Comments from May 7

1. Sanitary comments
    a. Remove reference to sanitary sewer easement on property. The sewer through the property was abandoned in 1988. Addressed in May 16th submittal.
    b. No other Sanitary comments as of June 5, 2018

2. Water comments
    a. On the C-5 Grading and Site Stabilization Plan, excavation is planned adjacent to the utility easement. A note should be placed on the plans to warn against encroaching into the easement or removing cover over the existing 16-inch PVC water main. Addressed in May 16th submittal.
    b. Add comments to the construction plans requiring that the utility easement be staked prior to construction so the grading contractor will be aware of the easement limits. The staking is to be maintained throughout the project. Addressed in May 16th submittal.
    c. No other Water comments as of June 5, 2018

3. Engineering comments
    a. Per feedback from Sanitary and Water, it is recommended that an offer, from Public Works to Wacker Neuson, be made to move the water main back into the road. The offer is contingent that all work would be done by and at Wacker Neuson's expense. By doing so, Wacker Neuson would obtain more useable land on their property. Addressed in May 16th submittal.
    b. Comments for Grading and Site Stabilization Plan Sheet C-5

i. Will fill or site grading be utilized to construct the southern landscape berm? If so, erosion control and silt fence should be called out. Addressed in May 16th submittal.
ii. Emergency spillways and overland flow routes for stormwater are to be identified on the plans. Addressed in May 16th submittal.
iii. Call out special outfall structures on the plan sheet at each respective location. Addressed in May 16th submittal.
iv. Top of berm, normal water level and highwater levels are to be identified on cross section illustrations for both north and south basins. Addressed in May 16th submittal.

c. Stormwater comments
   i. Temporary erosion control plans are to be identified as part of the construction sequencing. Addressed in May 16th submittal.
   ii. The invert of the inlet to Special Outlet Structure #7 shall match the specified normal water surface elevation. Addressed in May 16th submittal.
   iii. Anti-seep collars are to be utilized for both the north and south basin outfalls. (Per DNR Technical Standard 1001). Addressed in May 16th submittal.
   iv. Following construction and prior to final acceptance/occupancy, a survey recertification shall be provided to the engineering department to verify asbuilt pond grades, pond outlets and storm sewer elevations. Addressed in May 16th submittal.
   v. An annual inspection and pond maintenance plan, to be completed by the owner, is to be provided for engineering review and approval. Addressed in May 16th submittal.
   vi. The project received WisDNR permit coverage under WPDES GP No. WI-S067831-05 as referenced in a letter dated May 25, 2018.
   vii. The project will be subject to MMSD review per Chapter 13.12 regulations. Wacker Neuson will be required to address any comments provided by MMSD in their review.

d. Construction Access
   i. The plans should specify construction equipment access points. It appears the proposed construction access should only occur from an internal location on the south end of the property where the track pad is located. Please verify. Addressed in May 16th submittal.

Village of
Germantown
...Willkommen

Fee must accompany application

- ☒ $700 Minor Addition
- ☐ $1,240 Construction <10,000 SF
- ☐ $2,095 Construction 10,000 SF to 50,000
- ☐ $3,460 Industrial Construction >50,000 SF
- ☐ $3,460 Commercial Construction >50,000
- ☒ $200 Plan Commission Consultation
- ☒ $125 Fire Department Plan Review

PAID _____ DATE 4-16-18

SITE PLAN REVIEW APPLICATION

Pursuant to Section 17.43 of the Municipal Code

Please read and complete this application carefully. **All applications must be signed and dated.**

1

APPLICANT OR AGENT

Brian D. Johnson
Pinnacle Engineering Group
1051 E. Main Street, Suite 217
East Dundee. IL 60118

Phone (847) 551-5301
E-Mail brian.johnson@pinnacle-engr.com

PROPERTY OWNER

Kristine Zehren
Wacker Neuson
W 180 N 11691 River Lane
Germantown, WI 53022

Phone (262) 257-4116
E-Mail kristine.zehren@wackerneuson.com

2

PROPERTY ADDRESS

Wacker Neuson
W 180 N 11691 River Lane
Germantown, WI 53022

3

NEIGHBORING USES – Specify name and type of use, e.g. Enviro Tech – Industrial, Smith – Residential, etc.

North	South	East	West
Fulton Drive VBA Software Banner Welder	Morse Drive Happy Hounds Plastic Components Optotech Optimolgy	River Lane Glen at Blackstone Creek	North Shore Environmental

4

READ AND INITIAL THE FOLLOWING:

KRZ I am aware of the Village of Germantown ordinance requiring fire sprinklers in most new construction.

KRZ I understand that all new development is subject to Impact and/or Connection Fees that must be paid before building permits will be issued.

KRZ I understand that an incomplete application will be withdrawn from the Plan Commission agenda and that all resubmissions to the Plan Commission are subject to a new application fee.

5

SIGNATURES – ALL APPLICATION MUST BE SIGNED BY OWNER!

Kristine Zehren 4-16-18
Applicant Date

Kristine Zehren 4-16-18
Owner Date

WACKER NEUSON
all it takes!

Tuesday, April 17, 2018

Dear Village of Germantown Planning Commission,

It is our intent to expand our property located of Wacker Neuson located at W180 N11691 River Lane, Germantown, WI to include an exterior storage area to the west of the current of building. The expansion will cover approximately 3 acres and will include a compacted stone surface for storing small construction equipment. A concrete paved area for truck loading and trailer storage is being included at the south end of the storage expansion, and an open sided covered storage area adjacent to the southwest corner of the building will also be included. The expansion will include any required storm water management, site lighting, perimeter fencing, a berm, and landscaping enhancements.

Should you have any questions, please don't hesitate contacting me.

Thank you,

Kris Zehren
Director of Logistics
Wacker Neuson Logistics America, LLC

SITE PLAN REVIEW CHECKLIST

Pursuant to Section 17.43 of the Municipal Code

This checklist provides a summary of requirements found in the Municipal Code. It is intended purely as a guide for developers and should not substitute for a full review of the Code and applicable regulations. (Revised 1/02)

GENERAL INFORMATION

- [x] Provide Completed Checklist with submittal
- [x] Names and addresses of owner/developer/designer
- [x] Graphic scale, north arrow
- [x] Location sketch
- [x] Size of site (gross and net acreage)
- [x] Existing zoning
- [x] Adjacent zoning and uses
- [ ] Number of residents (subdivisions)
- [x] Number of employees

EXISTING SITE INFORMATION

- [x] Dimensions of site and lot lines (pipes found, pipes set, monuments)
- [x] Existing grades (2' contours minimum)
- [x] Adjacent property grades (within 10' minimum of property lines)
- [x] Adjacent structures (within 20' minimum of property lines)
- [x] Drainage systems and structures
- [x] Natural features (woods, streams, lakes, ponds, outcroppings)
- [ ] Wetland boundaries (provide date of staking)
- [ ] Floodplain elevation and boundaries
- [ ] Environmental concerns (underground tanks, etc)
- [x] Roads, curbs, parking lots, pavement areas
- [x] Structures (location, size)
- [x] Rights-of-Way (existing/ultimate)
- [x] Easements (drainage, utility)
- [x] Existing utilities (sanitary, water, electric, gas, telephone)
- [x] Benchmark locations and elevations
- [x] Location of fences, wells, borings, etc.

ARCHITECTURAL PLANS

- [ ] Existing building location
- [ ] Existing building elevations/materials
- [ ] Proposed use (use list from Section 17.45)
- [ ] Statement of design intent (narrative)
- [ ] Proposed floor plans (dimension)
- [ ] Square footage (total and individual rooms/stores)
- [ ] Proposed elevations (dimension)
- [ ] Proposed building height
- [ ] Proposed materials and colors (material sample board required for new construction)
- [ ] Proposed signage (elevations, color, square footage, height, construction material, lighting)
- [ ] Details of any special features

PROPOSED SITE PLAN

- [x] Grading and spot elevations
- [x] Erosion control measures (silt fencing, hay bales, rip-rap, tracking mat, stockpile locations)
- [x] Stormwater management
  - stormwater management design report
  - general drainage pattern
  - swales w/ arrows for direction of flow
  - pond design with outfalls
  - culverts (location/size)
- [x] Utilities (size, invert elevations, length, slope, etc.)
  - sanitary
  - water
  - stormsewer
- [x] Building location (dimension)
- [x] Building elevation (finished grade)
- [ ] Location of proposed signage - EXISTING
- [ ] Details of outside storage (including trash receptacles) - EXISTING
- [ ] Setbacks (clearly marked and dimensioned) - EXISTING
- [ ] Vehicular entrances (dimension to centerline of nearest intersection) - EXISTING
- [ ] Streets (dimension and direction for one-ways) - EXISTING
- [ ] Curve radii
- [ ] Sidewalks (dimension) - EXISTING
- [ ] Parking areas (show striping/spot elevations)
- [ ] Parking setback from property line - EXISTING
- [x] Loading areas (dimension)
- [x] Lot coverage
  - Square footage total
  - Impervious surfaces total (%)
  - Green space total (%)
  - Percent permitted (over/under %)
- [ ] Municipal utility connections
  - Sanitary sewer (pipe size/elevations)
  - Water (size, valve location, elevations)
  - Location of hydrants
- [x] Easement for public water mains

RECEIVED
APR 16 2018
OFFICE OF THE VILLAGE PLANNER
VILLAGE OF GERMANTOWN

LIGHTING PLAN

- [x] Major improvements for context
- [ ] Location/nature of existing fixtures
- [x] Location of proposed fixtures
- [x] Photometric report (to scale on plan)
- [x] Manufacturers cut-sheets of all fixtures
- [x] Lighting schedule
  - key to plan
  - number/type of fixtures
  - output (wattage)
- [x] Installation details as appropriate

LANDSCAPING PLAN

- [x] Major improvements for context (building, drives, walks)
- [ ] Proposed outdoor amenities (benches, paths, etc.)
- [x] Existing vegetation
  - Species
  - Size
  - Approximate canopy in plan
- [ ] Vegetation to be destroyed
  - List and show location
- [x] Proposed method of saving existing vegetation during construction
- [x] Proposed landscape features (berms, fountains)
- [x] Existing/proposed lighting
- [ ] Irrigation/watering systems (locate outlets)
- [x] Plant lists or schedules
  - Keyed to plan
  - Number of each species
  - Size when planted (caliper)
- [x] Installation details/staking

MODEL SUBMITTAL INCLUDES THE FOLLOWING PLANS:

1. Cover / Title Page
2. Existing Conditions Survey
3. General Site Plan
4. Grading, Paving & Erosion Control Plan
5. Utility Plan
6. Site Details (curbing, catch basins, detention ponds, pavement, erosion control and sign details)
7. Landscape Plan
8. Landscape details (planting schedule, berming cross-sections, method of installation)
9. Lighting Plan
10. Floor Plan
11. Exterior Building Elevations
12. Building Material Sample Board

In addition to the items on this list, Village Staff and/or the Plan Commission may require additional drawings and data to be submitted for approval.

If any public improvements or work is to be done in the Public Right-of-Way, the Village will require that a Developer's Agreement be submitted and approved by the Village Board.

May 16, 2018

Jeffery W. Retzlaff, AICP
Director Village Planner & Zoning Administrator
Village of Germantown
N112 W17001 Mequon Road
Germantown, WI 53022

RE: Wacker Neuson Storage Expansion Area
W180 N11691 River Lane
PEG Job No.: 1251.00-WI

Dear Mr. Retzlaff,

Thank you for your comment letter dated May 7, 2018, which also included comments from the Village Engineer dated May, 2018. The following items are enclosed for your review, and we offer the following in response.

- Fifteen (15) full sized copies of the revised Engineering Improvement Plans with the revision date of 5/10/2018.
- Two (2) reduced sized copies of the revised Engineering Improvement Plans with the revision date of 5/10/2018.
- One (1) copy of a Proposed Overall Property Pervious-Impervious Exhibit dated 5/09/2018.
- Sizing calculations for the basin 100-year over flow weirs.
- Cut Sheets and photographs of the mobile ramps.
- Details for the proposed canopy including plan elevations and a rendering.

<u>Planning Department</u>

1. There are a few site plan items required that are listed in the checklist as being provided (I assume by the check mark) but that are not actually included in the package that was submitted.

    a. The most basic of which is the existing and proposed lot coverages with buildings, other impervious area, open space and other site statistics. The parcel is in an M1 Zoning district with a maximum 80% lot coverage requirement. At this point, there's no way to know if that requirement is met. Please provide this information for the entire site (not just the area to be disturbed as shown in the storm water report).
    RESPONSE: The entire site is at an impervious coverage of 52.63% as per the included, Proposed Overall Property Pervious-Impervious Exhibit. This information has also been added to the Site Data Table on the Site Dimensional, Paving & Utility Plan, Sheet C-4 of the revised plans.

2. More detail regarding exterior light fixtures and mounting poles is required. The spec sheet calls out a 25' pole height, but the maximum fixture height is 25 feet. If the poles are mounted on standard 3' bases, the fixture height would/could exceed 25 feet. Please address. Also, the photometric plan sheet (PH-1) is missing.
RESPONSE: The fixture height has been revised to 20' to allow for the 3' base and remain under the maximum height of 25 feet. The Photometric plan sheet has also been included with the plans.

3. The grading plan refers to the landscaping plan for detail on the landscaped berm area in the SW corner of the site. However, no grade/elevation detail is shown in the landscape plan either. Will the berm actually include elevated topography or just plants? If vertical/horizontal undulating topography is proposed, what are the proposed grades? Berm Height?
RESPONSE: The plans have been revised to indicate the proposed contours of the landscape berm. The landscape plans have been revised to indicate the proposed planting that has been coordinated with the revised contours.

4. Will all the existing trees on the site be preserved? Streets trees along Morse and Fulton Drive? What about adjacent to the west side of the building in the area of the proposed canopy? Additional streets trees need to be added along Morse to fill in existing aps and provide some level of screening the new paved trailer parking area on the south side of the

Pinnacle Engineering new fenced area. Existing truck/trailer loading and parking areas are screened with landscaping, the same should be provided for the new features.
RESPONSE: All of the existing trees are slated for preservation and protection during the construction process. The Landscape plans also include a root pruning process for the trees near the excavation areas to promote the preservation attempts. Three additional trees have been added along the north side of the Morse Drive ROW to assist in the screening of the paved trailer parking area. The landscaping and berm in this area will also provide additional screening from Morse Drive.

5. As noted, the paved trailer parking area appears to be a large, unscreened swath of pavement for trailer parking. Concerns include:
    a. No screening or buffering
    RESPONSE: Screening and buffering have been provided per items 3 and 4 above.

    b. No curbing, barrier, fencing or bollard protection for trailers adjacent to an area that drops off 5-10 feet to a wet detention basin.
    RESPONSE: A 6" high barrier curb has been added to the plan to provide protection between the trailer parking area and the stormwater basin. The barrier curb design includes gaps to provide for drainage of the area.

    c. What are the ramps for? What do they look like? Height? Are they permanent features?
    RESPONSE: The ramps are mobile and are for loading of the trailers in the trailer parking area. Cut sheets and photographs have been included as part of this submittal.

    d. Other than trailers, will equipment and/or products be stored in this area?
    RESPONSE: No, the area is for truck trailers and other than the mobile ramps for loading of the trailers, there are no plans of placing equipment or products in this area.

6. Details about the proposed canopy (e.g. materials, dimensions, height, etc.) and structural components are required. Plan elevations and a rendering need to be included.
RESPONSE: Details for the proposed canopy including elevations and a rendering have been included with this submittal.

7. There are no details regarding the actual fencing and gates. Height? Material? Privacy slats? Security components? Is the fencing going to be just like the existing fenced area? Provide detail.
RESPONSE: The propose fencing around the storage area will be a new 8' tall galvanized chain link fence with gray privacy slats. This information can be seen on the Site Dimensional, Paving & Utility Plan, Sheet C-4 of the revised plans.

8. While not a site feature to be modified as part of the current site plan, the amount of driveway width for this property onto Morse Drive is…excessive. Understanding the dock layout is not changing, is it possible to reduce some of the asphalt and replace with landscaping… at least from the outer edges toward the middle? Maybe a strategically placed median island with landscaping? The transition from the landscaped parking lot near the building entrance to the dock/loading area to the west is dramatically different.
RESPONSE: Discussions with Wacker Neuson have determined that the existing driveway width is necessary for their current operations with the semi-truck turning radius for maneuvering in and out of the dock area.

9. A sample board of exterior materials is required. We will also need the elevations, colored rendering and plan sheets in a digital format for use in staff's PowerPoint presentation to the Plan Commission (if not already provided).
RESPONSE: A sample material board will be provided for the Plan Commission Meeting as well as the plan elevations and rendering identified in item 6 above.

<u>Public Works/Engineering</u>

1. Sanitary comments

a. Remove reference to sanitary sewer easement on property. The sewer through the property was abandoned in 1988.
RESPONSE: The notation for the sanitary sewer easement was not removed as that is the language that is of record on the Certified Survey Map 3171. We added a notation on the plan indicating that the sanitary sewer in the easement was abandoned (not sure if it was removed or just abandoned "in place") and that only the watermain exists within the easement.

2. Water comments
   a. On the C-5 Grading and Site Stabilization Plan, excavation is planned adjacent to the utility easement. A note should be placed on the plans to warn against encroaching into the easement or removing cover over the existing 16-inch PVC water main.
   RESPONSE: A note has been added to the plans per your request.

   b. Add comments to the construction plans requiring that the utility easement be staked prior to construction so the grading contractor will be aware of the easement limits. The staking is to be maintained throughout the project.
   RESPONSE: A note has been added to the plans per your request.

3. Engineering comments
   a. Per feedback from Sanitary and Water, it is recommended that an offer, from Public Works to Wacker Neuson, be made to move the water main back into the road. The offer is contingent that all work would be done by and at Wacker Neuson's expense. By doing so, Wacker Neuson would obtain more useable land on their property.
   RESPONSE: Discussions with Wacker Neuson have determined that they would like to proceed with their development, as presented, without relocating the watermain and easement but were appreciative of the offer.

   b. Comments for Grading and Site Stabilization Plan Sheet C-5
      i. Will fill or site grading be utilized to construct the southern landscape berm? If so, erosion control and silt fence should be called out.
      RESPONSE: Erosion and silt fence have been added to the berm area per your request.

      ii. Emergency spillways and overland flow routes for stormwater are to be identified on the plans.
      RESPONSE: The emergency 100-year overland weirs have been indicated on the plan, as requested. Additional calculations for the flow routes were included with this submittal.

      iii. Call out special outfall structures on the plan sheet at each respective location.
      RESPONSE: The special outfall structures have been labeled on the Grading and Site Stabilization Plan, Sheet C-5 per your request.

      iv. Top of berm, normal water level and highwater levels are to be identified on cross section illustrations for both north and south basins.
      RESPONSE: The items requested have been included on the north basin cross-section and a second cross-section has been added, with the same information, for the southern basin.

   c. Stormwater comments
      i. Temporary erosion control plans are to be identified as part of the construction sequencing.
      RESPONSE: The temporary erosion control measures are indicated to be a part of the "Sequence of Construction Activities" on the Grading & Site Stabilization Plan, Sheet C-5.

      ii. The invert of the inlet to Special Outlet Structure #7 shall match the specified normal water surface elevation.
      RESPONSE: The normal water surface elevation and the invert of the special structure have been coordinated to match.

iii. Anti-seep collars are to be utilized for both the north and south basin outfalls. (Per DNR Technical Standard 1001).
RESPONSE: Anti-seep collars have been indicated on the basin cross-sections referenced in item 3.b.iv. above.

iv. Following construction and prior to final acceptance/occupancy, a survey recertification shall be provided to the engineering department to verify as built pond grades, pond outlets and storm sewer elevations.
RESPONSE: A note indicating the record drawing information requested has been added to the Project Specifications, Sheet C-2, note No. 30, under the General Notes section.

v. An annual inspection and pond maintenance plan, to be completed by the owner, is to be provided for engineering review and approval.
RESPONSE: An annual inspection and pond maintenance plan has been included with this submittal for your review and approval.

d. Construction Access

i. The plans should specify construction equipment access points. It appears the proposed construction access should only occur from an internal location on the south end of the property where the track pad is located. Please verify.
RESPONSE: A note indicating the use of the construction entrance by all construction equipment has been added to the Grading & Site Stabilization Plan, Sheet C-5.

We appreciate your time and assistance. If you have any questions or require additional information, please do not hesitate to contact me at (847) 551-5300 or brian.johnson@pinnacle-engr.com.

Best Regards,
PINNACLE ENGINEERING GROUP, LLC

Brian D. Johnson, P.E., CPESC
Senior Project Manager | Principal

ENGINEERING IMPROVEMENT PLANS
FOR
WACKER NEUSON - GERMANTOWN STORAGE EXPANSION AREA

W180 N11691 RIVER LANE
GERMANTOWN, WISCONSIN

PLANS PREPARED
FOR

WACKER NEUSON

W180 N11691 RIVER LANE
GERMANTOWN, WISCONSIN 53022
(262) 257-4116

LEGEND

	EXISTING	PROPOSED
SANITARY MANHOLE		
STORM MANHOLE		
CATCH BASIN		
INLET		
PRECAST FLARED END SECTION		
CONCRETE HEADWALL		
VALVE VAULT		
VALVE BOX		
FIRE HYDRANT		
BUFFALO BOX		
CLEANOUT		
SANITARY SEWER		
FORCE MAIN		
STORM SEWER		
WATER MAIN	W	W
UTILITY CROSSING		X
GRANULAR TRENCH BACKFILL		
LIGHTING		
ELECTRICAL CABLE	E	E
ELECTRICAL TRANSFORMER OR PEDESTAL	E	
POWER POLE		
POWER POLE WITH LIGHT		
GUY WIRE		
STREET SIGN		
GAS MAIN	G	G
TELEPHONE LINE	T	T
CONTOUR	749	749
SPOT ELEVATION	×(750.00)	×750.00
WETLANDS		
FLOODWAY		
FLOODPLAIN		
HIGH WATER LEVEL (HWL)		
NORMAL WATER LEVEL (NWL)		
DIRECTION OF SURFACE FLOW		
DITCH OR SWALE		
DIVERSION SWALE		
OVERFLOW RELIEF ROUTING		
TREE WITH TRUNK SIZE	6"	6"
SOIL BORING	B-0	B-1
TOPSOIL PROBE	P-0	P-1
FENCE LINE, TEMPORARY SILT	SF	SF
FENCE LINE, WIRE		
FENCE LINE, CHAIN LINK OR IRON		
FENCE LINE, WOOD OR PLASTIC		
CONCRETE SIDEWALK		
CURB AND GUTTER		
DEPRESSED CURB		
REVERSE PITCH CURB & GUTTER		
EASEMENT LINE		
PROPERTY LINE		

ABBREVIATIONS

BL	BASE LINE	NWL	NORMAL WATER LEVEL
C	LONG CHORD OF CURVE	PC	POINT OF CURVATURE
C & G	CURB AND GUTTER	PT	POINT OF TANGENCY
CB	CATCH BASIN	PVI	POINT OF VERTICAL INTERSECTION
CL	CENTERLINE	R	RADIUS
D	DEGREE OF CURVE	ROW	RIGHT-OF-WAY
EP	EDGE OF PAVEMENT	SAN	SANITARY SEWER
FF	FINISHED FLOOR	ST	STORM SEWER
FG	FINISHED GRADE	T	TANGENCY OF CURVE
FL	FLOW LINE	TB	TOP OF BANK
FP	FLOODPLAIN	TC	TOP OF CURB
FR	FRAME	TF	TOP OF FOUNDATION
FW	FLOODWAY	TP	TOP OF PIPE
HWL	HIGH WATER LEVEL	TS	TOP OF SIDEWALK
INV	INVERT	TW	TOP OF WALK
L	LENGTH OF CURVE	WM	WATER MAIN
MH	MANHOLE	△	INTERSECTION ANGLE

CONTACTS

WACKER NEUSON LOGISTICS AMERICA, LLC

MS. KRIS ZEHREN
DIRECTOR OF NORTH AMERICAN LOGISTICS
W180 N11691 RIVER LANE
GERMANTOWN, WI. 53022
(262) 257-4116

PINNACLE ENGINEERING GROUP, LLC

BRIAN JOHNSON, P.E., CPESC
15850 W. BLUEMOUND ROAD, SUITE 210
BROOKFIELD, WI. 53005
(847) 551-5301

VILLAGE OF GERMANTOWN

JOHN LANING, VILLAGE ENGINEER
N112 W17001 MEQUON ROAD
GERMANTOWN, WI 53022
(262) 250-4720

VILLAGE OF GERMANTOWN

LARRY RATAYCZAK, DIRECTOR OF PUBLIC WORKS
N112 W17001 MEQUON ROAD
GERMANTOWN, WI 53022
(262) 250-4721

VILLAGE OF GERMANTOWN

PAUL HAUGEN, WATER SUPERINTENDENT
N122 W17177 FOND DU LAC AVENUE
GERMANTOWN, WI 53022
(262) 253-8254

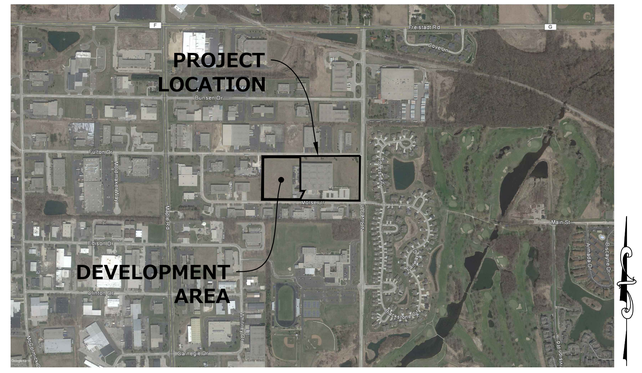

LOCATION MAP
SCALE: 1" = 900'

GENERAL NOTES

1. THE INTENTION OF THE PLANS AND SPECIFICATIONS IS TO SET FORTH PERFORMANCE AND CONSTRUCTION MATERIAL STANDARDS FOR THE PROPER EXECUTION OF WORK. ALL WORKS CONTAINED WITHIN THE PLANS AND SPECIFICATIONS SHALL BE COMPLETED IN ACCORDANCE WITH ALL REQUIREMENTS FROM LOCAL, STATE, FEDERAL OR OTHER GOVERNING AGENCY'S LAWS, REGULATIONS, JURISDICTIONAL ORDINANCES/CODES/RULES/ETC., AND THE OWNER'S DIRECTION.
2. A GEOTECHNICAL REPORT WILL BE PREPARED AND WILL BE AVAILABLE FROM THE OWNER. THE DATA ON SUB-SURFACE SOIL CONDITIONS IS NOT INTENDED AS A REPRESENTATION OR WARRANTY OF THE CONTINUITY OF SUCH CONDITIONS BETWEEN BORINGS OR INDICATED SAMPLING LOCATIONS. IT SHALL BE EXPRESSLY UNDERSTOOD THAT OWNER WILL NOT BE RESPONSIBLE FOR ANY INTERPRETATIONS OR CONCLUSIONS DRAWN THERE FROM BY THE CONTRACTOR. DATA IS MADE AVAILABLE FOR THE CONVENIENCE OF THE CONTRACTOR. THE CONTRACTOR IS RESPONSIBLE FOR PERFORMING ANY ADDITIONAL SOILS INVESTIGATIONS THEY FEEL IS NECESSARY FOR THE PROPER EVALUATION OF THE SITE FOR PURPOSES OF PLANNING, BIDDING, OR CONSTRUCTING THE PROJECT AT NO ADDITIONAL COST TO THE OWNER.
3. THE CONTRACTOR IS RESPONSIBLE TO REVIEW AND UNDERSTAND ALL COMPONENTS OF THE PLANS AND SPECIFICATIONS, INCLUDING FIELD VERIFYING SOIL CONDITIONS, PRIOR TO SUBMISSION OF A BID PROPOSAL.
4. THE CONTRACTOR SHALL PROMPTLY REPORT ANY ERRORS OR AMBIGUITIES LEARNED AS PART OF THEIR REVIEW OF PLANS, SPECIFICATIONS, REPORTS AND FIELD INVESTIGATIONS.
5. THE CONTRACTOR IS SOLELY RESPONSIBLE FOR THE COMPUTATION OF QUANTITIES AND WORK REQUIRED TO COMPLETE THIS PROJECT. THE CONTRACTOR'S BID SHALL BE BASED ON ITS OWN COMPUTATIONS AND IN NO SUCH INSTANCE RELY ON THE ENGINEER'S ESTIMATE.
6. QUESTIONS/CLARIFICATIONS WILL BE INTERPRETED BY ENGINEER/OWNER PRIOR TO THE AWARD OF CONTRACT. ENGINEER/OWNER WILL SUBMIT OFFICIAL RESPONSES IN WRITING. INTERPRETATIONS PRESENTED IN OFFICIAL RESPONSES SHALL BE BINDING ON ALL PARTIES ASSOCIATED WITH THE CONTRACT. IN NO WAY SHALL WORD-OF-MOUTH DIALOG CONSTITUTE AN OFFICIAL RESPONSE.
7. PRIOR TO START OF WORK, CONTRACTOR SHALL BE COMPLETELY FAMILIAR WITH ALL CONDITIONS OF THE SITE, AND SHALL ACCOUNT FOR CONDITIONS THAT AFFECT, OR MAY AFFECT CONSTRUCTION INCLUDING, BUT NOT LIMITED TO, LIMITATIONS OF WORK ACCESS, SPACE LIMITATIONS, OVERHEAD OBSTRUCTIONS, TRAFFIC PATTERNS, LOCAL REQUIREMENTS, ADJACENT ACTIVITIES, ETC. FAILURE TO CONSIDER SITE CONDITIONS SHALL NOT BE CAUSE FOR CLAIM OF JOB EXTRAS.
8. COMMENCEMENT OF CONSTRUCTION SHALL EXPLICITLY CONFIRM THAT THE CONTRACTOR HAS REVIEWED THE PLANS AND SPECIFICATIONS IN ENTIRETY AND CERTIFIES THAT THEIR SUBMITTED BID PROPOSAL CONTAINS PROVISIONS TO COMPLETE THE PROJECT, WITH THE EXCEPTION OF UNFORESEEN FIELD CONDITIONS; ALL APPLICABLE PERMITS HAVE BEEN OBTAINED; AND CONTRACTOR UNDERSTANDS ALL OF THE REQUIREMENTS OF THE PROJECT.
9. SHOULD ANY DISCREPANCIES OR CONFLICTS IN THE PLANS OR SPECIFICATIONS BE DISCOVERED AFTER THE AWARD OF CONTRACT, ENGINEER SHALL BE NOTIFIED IN WRITING IMMEDIATELY AND CONSTRUCTION OF ITEMS AFFECTED BY THE DISCREPANCIES/CONFLICTS SHALL NOT COMMENCE, OR CONTINUE, UNTIL A WRITTEN RESPONSE FROM ENGINEER/OWNER IS DISTRIBUTED. IN THE EVENT OF A CONFLICT BETWEEN REFERENCED CODES, STANDARDS, SPECIFICATIONS AND PLANS, THE ONE ESTABLISHING THE MOST STRINGENT REQUIREMENTS SHALL BE FOLLOWED.
10. THE CONTRACTOR SHALL, AT ITS OWN EXPENSE, OBTAIN ALL NECESSARY PERMITS AND LICENSES TO COMPLETE THE PROJECT. OBTAINING PERMITS, OR DELAYS, IS NOT CAUSE FOR DELAY OF THE CONTRACT OR SCHEDULE. CONTRACTOR SHALL COMPLY WITH ALL PERMIT REQUIREMENTS.
11. THE CONTRACTOR SHALL NOTIFY ALL INTERESTED GOVERNING AGENCIES, UTILITY COMPANIES AFFECTED BY THIS CONSTRUCTION PROJECT, AND DIGGER'S HOTLINE IN ADVANCE OF CONSTRUCTION TO COMPLY WITH ALL JURISDICTIONAL ORDINANCES/CODES/RULES/ETC., PERMIT STIPULATIONS, AND OTHER APPLICABLE STANDARDS.
12. SAFETY IS THE SOLE RESPONSIBILITY OF THE CONTRACTOR. THE CONTRACTOR SHALL BE RESPONSIBLE TO INITIATE, INSTITUTE, ENFORCE, MAINTAIN, AND SUPERVISE ALL SAFETY PRECAUTIONS AND JOB SITE SAFETY PROGRAMS IN CONNECTION WITH THE WORK.
13. CONTRACTOR SHALL KEEP THE JOBSITE CLEAN AND ORDERLY AT ALL TIMES. ALL LOCATIONS OF THE SITE SHALL BE KEPT IN A WORKING MANNER SUCH THAT DEBRIS IS REMOVED CONTINUOUSLY AND ALL RESPECTIVE CONTRACTORS OPERATE UNDER GENERAL "GOOD HOUSEKEEPING."
14. THE CONTRACTOR SHALL INDEMNIFY THE OWNER, ENGINEER, AND THEIR AGENTS FROM ALL LIABILITY INVOLVED WITH THE CONSTRUCTION, INSTALLATION, AND TESTING OF THE WORK ON THIS PROJECT.
15. PRIOR TO CONSTRUCTION, A PRECONSTRUCTION MEETING MUST BE HELD AT THE VILLAGE OFFICES. THE PRECONSTRUCTION MEETING SHALL BE SCHEDULED AND MODERATED BY THE DESIGN ENGINEER OF RECORD.

INDEX OF SHEETS

C-1	COVER SHEET
C-2	PROJECT SPECIFICATIONS
C-3	EXISTING CONDITIONS
C-4	SITE DIMENSIONAL, PAVING & UTILITY PLAN
C-5	GRADING & SITE STABILIZATION PLAN
C-6	CONSTRUCTION STANDARDS

ATTACHMENTS

EX-1	PLAT OF SURVEY
LA-1	OVERALL LANDSCAPE PLAN
LA-2	LANDSCAPE NOTES
LA-3	PLANTING DETAILS
PH-1	PHOTOMETRIC PLAN

BENCHMARKS

NOTE:
EXISTING TOPOGRAPHY SHOWN REPRESENTS SITE CONDITIONS AS PREPARED BY PINNACLE ENGINEERING GROUP, LLC. ON MARCH 2, 2018. CONTRACTOR SHALL FIELD CHECK EXISTING HORIZONTAL AND VERTICAL SITE FEATURES AND CONDITIONS AND NOTIFY ENGINEER OF ANY DISCREPANCIES PRIOR TO STARTING CONSTRUCTION.

REFERENCE BENCHMARK

CONCRETE MONUMENT WITH BRASS CAP AT THE SOUTHEAST CORNER OF THE NORTHWEST 1/4 SECTION 21, TOWN 9 NORTH, RANGE 20 EAST. ELEVATION = 871.55

SITE BENCHMARK NO.1

NORTHEAST FLANGE BOLT ON EXISTING FIRE HYDRANT NORTH OF MORSE DRIVE APPROXIMATELY 970 L.F. WEST OF INTERSECTION OF MORSE DRIVE AND RIVER LANE.
ELEVATION = 899.57

ISSUE FOR PERMIT

WISCONSIN ADAM R. ARTZ E-40448 MILWAUKEE, WI PROFESSIONAL ENGINEER
04/13/2018

DIGGERS HOTLINE
Toll Free (800) 242-8511
Milwaukee Area (414) 259-1181
Hearing Impaired TDD (800) 542-2289
www.DiggersHotline.com

PINNACLE ENGINEERING GROUP, LLC
ENGINEER'S LIMITATION

PINNACLE ENGINEERING GROUP, LLC AND THEIR CONSULTANTS DO NOT WARRANT OR GUARANTEE THE ACCURACY AND COMPLETENESS OF THE DELIVERABLES HEREIN BEYOND A REASONABLE DILIGENCE. IF ANY MISTAKES, OMISSIONS, OR DISCREPANCIES ARE FOUND TO EXIST WITHIN THE DELIVERABLES, THE ENGINEER SHALL BE PROMPTLY NOTIFIED PRIOR TO BID SO THAT HE MAY HAVE THE OPPORTUNITY TO TAKE WHATEVER STEPS NECESSARY TO RESOLVE THEM. FAILURE TO PROMPTLY NOTIFY THE ENGINEER OF SUCH CONDITIONS SHALL ABSOLVE THE ENGINEER FROM ANY RESPONSIBILITY FOR THE CONSEQUENCES OF SUCH FAILURE. ACTIONS TAKEN WITHOUT THE KNOWLEDGE AND CONSENT TO THE ENGINEER, OR IN CONTRADICTION TO THE ENGINEER'S DELIVERABLES OR RECOMMENDATIONS, SHALL BECOME THE RESPONSIBILITY NOT OF THE ENGINEER BUT OF THE PARTIES RESPONSIBLE FOR TAKING SUCH ACTION.

FURTHERMORE, PINNACLE ENGINEERING GROUP, LLC IS NOT RESPONSIBLE FOR CONSTRUCTION SAFETY OR THE MEANS AND METHODS OF CONSTRUCTION.

PLAN | DESIGN | DELIVER
www.pinnacle-engr.com
PINNACLE ENGINEERING GROUP
ENGINEERING | NATURAL RESOURCES | SURVEYING
CHICAGO OFFICE:
1051 E. MAIN ST. | SUITE 217
EAST DUNDEE, IL 60118
(847) 551-5300
CHICAGO | MILWAUKEE : NATIONWIDE

WACKER NEUSON - GERMANTOWN STORAGE EXPANSION AREA
GERMANTOWN, WISCONSIN

REVISIONS

1	ISSUE FOR PERMIT	04/13/18
2	PER VILLAGE REVIEW	05/10/18

COVER SHEET

PEG JOB No. 251.00-WI
PEG PM DAT
START DATE 04/13/18
SCALE NONE

SHEET C-1 OF C-6

© COPYRIGHT 2018
THESE PLANS AND DESIGNS ARE COPYRIGHT PROTECTED AND MAY NOT BE USED IN WHOLE OR IN PART WITHOUT THE WRITTEN CONSENT OF PINNACLE ENGINEERING GROUP, LLC
www.pinnacle-engr.com

DRAFTED: DKT DESIGNED: DKT REVIEWED: DAT 5/15/2018 11:04 AM - Z:\Projects\2018\251.00-WI\CAD\SHEETS\C-1 COVER SHEET.dwg

THESE PLANS AND DESIGNS ARE COPYRIGHT PROTECTED AND MAY NOT BE USED IN WHOLE OR IN PART WITHOUT THE WRITTEN CONSENT OF PINNACLE ENGINEERING GROUP, LLC

DRAFTED: DKT DESIGNED: DKT REVIEWED: DAT 5/15/2018 11:05 AM – Z:\Projects\2018\1251.00-WI\CAD\SHEETS\C-2 PROJECT SPECIFICATIONS.dwg

GENERAL NOTES

1. THE WISCONSIN D.O.T. STANDARD SPECIFICATIONS FOR HIGHWAY AND STRUCTURE CONSTRUCTION, LATEST EDITION, THE STANDARD SPECIFICATIONS FOR SEWER & WATER IN WISCONSIN, AND WISCONSIN ADMINISTRATIVE CODE, SPS 360, 382-383, AND THE LOCAL ORDINANCES AND SPECIFICATIONS, THESE CONSTRUCTION PLANS, THE SPECIAL PROVISIONS, GENERAL CONDITIONS AND SUBSEQUENT DETAILS ARE ALL TO BE CONSIDERED AS PART OF THE CONTRACT DOCUMENTS. INCIDENTAL ITEMS OR ACCESSORIES NECESSARY TO COMPLETE THIS WORK MAY NOT BE SPECIFICALLY NOTED BUT ARE TO BE CONSIDERED A PART OF THE CONTRACT.

2. NO CONSTRUCTION PLANS SHALL BE USED FOR CONSTRUCTION UNLESS SPECIFICALLY MARKED "FOR CONSTRUCTION". PRIOR TO COMMENCEMENT OF CONSTRUCTION, THE INDIVIDUAL SUBCONTRACTOR SHALL VERIFY ALL DIMENSIONS AND CONDITIONS AFFECTING THEIR WORK WITH THE ACTUAL CONDITIONS AT THE JOB SITE. IF THERE ARE ANY DISCREPANCIES FROM WHAT IS SHOWN ON THE CONSTRUCTION PLANS, HE MUST IMMEDIATELY REPORTED SAME TO THE ENGINEER BEFORE DOING ANY WORK, OTHERWISE THE INDIVIDUAL SUBCONTRACTOR ASSUMES FULL RESPONSIBILITY. IN THE EVENT OF DISAGREEMENT BETWEEN THE CONSTRUCTION PLANS, STANDARD SPECIFICATIONS AND/OR SPECIAL DETAILS, THE INDIVIDUAL SUBCONTRACTOR SHALL SECURE WRITTEN INSTRUCTIONS FROM THE ENGINEER PRIOR TO PROCEEDING WITH ANY PART OF THE WORK AFFECTED BY OMISSIONS OR DISCREPANCIES. FAILING TO SECURE SUCH INSTRUCTION, THE INDIVIDUAL SUBCONTRACTOR WILL BE CONSIDERED TO HAVE PROCEEDED AT HIS OWN RISK AND EXPENSE. IN THE EVENT OF ANY DOUBT OR QUESTION ARISING WITH RESPECT TO THE TRUE MEANING OF THE CONSTRUCTION PLANS OR SPECIFICATIONS, THE DECISION OF THE ENGINEER SHALL BE FINAL AND CONCLUSIVE.

3. THE CONTRACTOR SHALL NOTIFY THE OWNER AND THE MUNICIPALITY FORTY- EIGHT (48) HOURS PRIOR TO THE START OF CONSTRUCTION.

4. THE MUNICIPALITY SHALL HAVE THE RIGHT TO INSPECT, APPROVE, AND REJECT THE CONSTRUCTION OF THE PUBLIC PORTIONS OF THE WORK. THE OWNER SHALL HAVE THE RIGHT TO INSPECT, APPROVE, AND REJECT THE CONSTRUCTION OF ALL PRIVATE PORTIONS OF THE WORK. THE OWNER SHALL HAVE THE RIGHT TO HAVE ALL MATERIALS USED IN CONSTRUCTION TESTED FOR COMPLIANCE WITH THESE SPECIFICATIONS.

5. ALL WORK PERFORMED UNDER THIS CONTRACT SHALL BE GUARANTEED AGAINST ALL DEFECTS IN MATERIALS AND WORKMANSHIP FOR REPAIR OR REPLACEMENT BY THE INDIVIDUAL SUBCONTRACTOR AND HIS SURETY FOR A PERIOD OF 24 MONTHS FROM THE DATE OF FINAL ACCEPTANCE OF THE WORK BY THE VILLAGE, OTHER APPLICABLE GOVERNMENTAL AGENCIES, AND THE OWNER.

6. BEFORE ACCEPTANCE BY THE OWNER AND FINAL PAYMENT, ALL WORK SHALL BE INSPECTED AND APPROVED BY THE OWNER OR HIS REPRESENTATIVE. FINAL PAYMENT WILL BE MADE AFTER ALL OF THE INDIVIDUAL SUBCONTRACTORS' WORK HAS BEEN APPROVED AND ACCEPTED, AND IN ACCORDANCE WITH THE CONTRACT DOCUMENTS.

7. UPON AWARD OF THE CONTRACT AND WHEN REQUIRED BY THE OWNER, THE INDIVIDUAL SUBCONTRACTOR SHALL FURNISH A LABOR, MATERIAL AND PERFORMANCE BOND IN THE PENAL SUM OF 100 PERCENT OF THE CONTRACT GUARANTEEING COMPLETION OF THE WORK. THE UNDERWRITER SHALL BE APPROVED BY THE OWNER.

8. THE INDIVIDUAL SUBCONTRACTOR SHALL BE RESPONSIBLE FOR OBTAINING ALL REQUIRED PERMITS FOR CONSTRUCTION ALONG OR ACROSS EXISTING STREETS OR HIGHWAYS INCLUDING THE USE AND ACCESS OF EXISTING STREETS.THE INDIVIDUAL SUBCONTRACTOR SHALL MAKE ARRANGEMENTS FOR THE PROPER BRACING, SHORING AND OTHER REQUIRED PROTECTION OF ALL ROADWAYS BEFORE CONSTRUCTION BEGINS. THE INDIVIDUAL SUBCONTRACTOR SHALL BE RESPONSIBLE FOR ANY DAMAGE TO THE STREETS OR ROADWAYS AND ASSOCIATED STRUCTURES AND SHALL MAKE REPAIRS AS NECESSARY TO THE SATISFACTION OF THE ENGINEER.

9. SILT FENCE AND OTHER EROSION CONTROL FACILITIES MUST BE INSTALLED PRIOR TO CONSTRUCTION OR ANY OTHER LAND DISTURBING ACTIVITY . FOLLOW THE SEQUENCE OF CONSTRUCTION ON THE EROSION CONTROL PLAN FOR MORE DETAILS. INSPECTIONS SHALL BE MADE WEEKLY OR AFTER EVERY RAINFALL OF 0.5" OR MORE. REPAIRS SHALL BE MADE IMMEDIATELY. THE CONTRACTOR SHALL BE RESPONSIBLE FOR REMOVING ALL EROSION CONTROL FACILITIES ONCE THE THREAT OF EROSION HAS PASSED WITH THE APPROVAL OF THE GOVERNING AGENCY.

10. EASEMENTS FOR THE EXISTING UTILITIES, BOTH PUBLIC AND PRIVATE, AND UTILITIES WITHIN PUBLIC RIGHTS-OF-WAY ARE SHOWN ON THE PLANS ACCORDING TO AVAILABLE RECORDS. THE INDIVIDUAL SUBCONTRACTOR SHALL BE RESPONSIBLE FOR DETERMINING THE EXACT LOCATION IN THE FIELD OF THESE UTILITY LINES AND THEIR PROTECTION FROM DAMAGE DUE TO CONSTRUCTION OPERATIONS. IF EXISTING UTILITY LINES OF ANY NATURE ARE ENCOUNTERED WHICH CONFLICT IN LOCATION WITH NEW CONSTRUCTION, THE INDIVIDUAL SUBCONTRACTOR SHALL NOTIFY THE ENGINEER IMMEDIATELY SO THAT THE CONFLICT MAY BE RESOLVED.

11. THE INDIVIDUAL SUBCONTRACTOR SHALL REVIEW AND DETERMINE ALL IMPROVEMENTS AND SHALL VERIFY ALL QUANTITIES AS PROVIDED BY THE ENGINEER OR OWNER FOR BIDDING PURPOSES. THE INDIVIDUAL SUBCONTRACTOR SHALL REPORT ANY DISCREPANCIES TO THE ENGINEER. THE CONTRACT PRICE SUBMITTED BY THE INDIVIDUAL SUBCONTRACTOR SHALL BE CONSIDERED AS A LUMP SUM FOR THE COMPLETE PROJECT UNLESS THERE IS A PLAN REVISION AND/OR WRITTEN CHANGE TO THE SCOPE OF WORK.

12. WHENEVER THE PERFORMANCE OF WORK IS INDICATED ON THE PLANS, AND NO ITEM IS INCLUDED IN THE CONTRACT FOR PAYMENT, THE WORK SHALL BE CONSIDERED INCIDENTAL TO THE CONTRACT, AND NO ADDITIONAL COMPENSATION WILL BE ALLOWED.

13. WHENEVER, DURING CONSTRUCTION OPERATIONS, ANY LOOSE MATERIAL IS DEPOSITED IN THE FLOW LINE OF GUTTERS, DRAINAGE STRUCTURES, DITCHES, ETC. SUCH THAT THE NATURAL FLOW LINE OF WATER IS OBSTRUCTED, THIS LOOSE MATERIAL SHALL BE REMOVED AT THE CLOSE OF EACH WORKING DAY BY THE RESPONSIBLE PARTY. AT THE CONCLUSION OF CONSTRUCTION OPERATIONS, ALL DRAINAGE STRUCTURES AND FLOW LINES SHALL BE FREE FROM DIRT AND DEBRIS. THIS WORK SHALL BE CONSIDERED INCIDENTAL TO THE CONTRACT.

14. THE INDIVIDUAL SUBCONTRACTOR SHALL BE RESPONSIBLE FOR THE INSTALLATION AND MAINTENANCE OF ADEQUATE SIGNS,TRAFFIC CONTROL DEVICES,AND WARNING DEVICES TO INFORM AND PROTECT THE PUBLIC DURING ALL PHASES OF CONSTRUCTION. BARRICADES AND WARNING SIGNS SHALL BE PROVIDED IN ACCORDANCE WITH THE WISDOT STANDARD SPECIFICATIONS. ADEQUATE LIGHTING SHALL BE MAINTAINED FROM DUSK TO DAWN AT ALL LOCATIONS WHERE CONSTRUCTION OPERATIONS WARRANT, OR AS DESIGNATED BY THE ENGINEER OR VILLAGE. ALL TRAFFIC CONTROL WORK SHALL BE DONE IN ACCORDANCE WITH THE WISCONSIN "MANUAL ON UNIFORM TRAFFIC CONTROL DEVICES."

15. ALL PERMANENT TYPE PAVEMENTS OR OTHER PERMANENT IMPROVEMENTS WHICH ABUT THE PROPOSED IMPROVEMENT AND MUST BE REMOVED, SHALL BE SAWED FULL DEPTH. PRIOR TO REMOVAL. ALL ITEMS SO REMOVED SHALL BE REPLACED WITH SIMILAR CONSTRUCTION MATERIALS TO THEIR ORIGINAL CONDITION OR BETTER. PAYMENT FOR SAWING SHALL BE INCLUDED IN THE COST FOR REMOVAL OF EACH ITEM AND REPLACEMENT WILL BE PAID UNDER THE RESPECTIVE ITEMS IN THE CONTRACT, UNLESS OTHERWISE INDICATED.

16. ANY ADJACENT PROPERTIES OR ROAD RIGHT-OF-WAYS WHICH ARE DAMAGED DURING CONSTRUCTION MUST BE RESTORED BY THE CONTRACTOR AT HIS OWN EXPENSE.

17. REMOVED PAVEMENT, SIDEWALK, CURB AND GUTTER, ETC. SHALL BE DISPOSED OF BY THE INDIVIDUAL SUBCONTRACTOR AT HIS OWN EXPENSE AT LOCATIONS APPROVED BY THE OWNER. IF ONSITE DISPOSAL IS NOT FEASIBLE, THE INDIVIDUAL SUBCONTRACTOR SHALL BE RESPONSIBLE FOR PROVIDING AN OFFSITE DUMP SITE AT HIS OWN EXPENSE.

18. WHERE OVERHANGING BRANCHES INTERFERE WITH OPERATIONS OF CONSTRUCTION, SAID BRANCHES SHALL BE TRIMMED AND SEALED IN ACCORDANCE WITH THE WISDOT STANDARD SPECIFICATIONS, AND THE COST OF SAME SHALL BE INCIDENTAL TO THE CONTRACT. TREES SHALL BE REMOVED ONLY AFTER RECEIVING APPROVAL OF THE OWNER. THE OWNER SHALL DESIGNATE WHICH TREES ARE TO BE REMOVED.

19. ALL EXISTING TRAFFIC SIGNS, STREET SIGNS, ETC., WHICH INTERFERE WITH CONSTRUCTION OPERATIONS AND ARE NOT NOTED FOR REMOVAL OR DISPOSAL, SHALL BE REMOVED AND RESET BY THE INDIVIDUAL SUBCONTRACTOR IN ACCORDANCE WITH WISDOT STANDARD SPECIFICATIONS AT LOCATIONS AS DESIGNATED BY THE ENGINEER. IF A SIGN NEEDS TO BE MOVED, NOTIFY THE PUBLIC WORKS DEPARTMENT AT (262) 250-4721. THIS SHALL BE CONSIDERED INCIDENTAL TO THE CONTRACT AND NO ADDITIONAL COMPENSATION SHALL BE ALLOWED. DAMAGE TO THESE ITEMS SHALL BE REPAIRED BY THE INDIVIDUAL SUBCONTRACTOR AT HIS OWN EXPENSE. ALL SIGNS NOT REQUIRED TO BE RESET SHALL BE DELIVERED TO THE VILLAGE AS APPROPRIATE. ALL MAIL BOXES THAT INTERFERE WITH CONSTRUCTION SHALL BE SIMILARLY RELOCATED AT NO ADDITIONAL COST.

20. NOTIFY THE ENGINEER OF ALL FIELD TILE ENCOUNTERED DURING CONSTRUCTION OPERATIONS. NO FIELD TILE SHALL BE DIRECTLY OR INDIRECTLY CONNECTED TO THE PROPOSED STORM SEWER . A RECORD OF THE LOCATION OF ALL FIELD TILE OR ON-SITE DRAIN PIPE ENCOUNTERED SHALL BE KEPT BY THE CONTRACTOR AND TURNED OVER TO THE ENGINEER UPON COMPLETION OF THE PROJECT. THE COST OF THIS WORK SHALL BE CONSIDERED AS INCIDENTAL TO THE CONTRACT AND NO ADDITIONAL COMPENSATION WILL BE ALLOWED.

21. DURING CONSTRUCTION OPERATIONS THE INDIVIDUAL SUBCONTRACTOR SHALL INSURE POSITIVE DRAINAGE AT THE CONCLUSION OF EACH DAY. DRAINAGE MAY BE ACHIEVED BY DITCHING, PUMPING OR ANY OTHER ACCEPTABLE METHOD. THE INDIVIDUAL SUBCONTRACTOR'S FAILURE TO PROVIDE THE ABOVE WILL PRECLUDE ANY POSSIBLE ADDED COMPENSATION REQUESTED DUE TO DELAYS OR UNSUITABLE MATERIALS CREATED AS A RESULT THEREOF.

22. IT SHALL BE THE RESPONSIBILITY OF THE INDIVIDUAL SUBCONTRACTOR TO REMOVE FROM THE SITE ANY AND ALL MATERIALS AND DEBRIS WHICH RESULT FROM HIS CONSTRUCTION OPERATIONS AT NO ADDITIONAL EXPENSE TO THE OWNER.

23. THE INDIVIDUAL SUBCONTRACTOR SHALL COMPLY WITH AND OBSERVE THE RULES AND REGULATIONS OF O.S.H.A. AND APPROPRIATE AUTHORITIES REGARDING SAFETY PROVISIONS. SITE SAFETY SHALL BE THE SOLE RESPONSIBILITY OF THE CONTRACTOR.

24. THE ENGINEER AND OWNER ARE NOT RESPONSIBLE FOR THE CONSTRUCTION MEANS, METHODS, TECHNIQUES, SEQUENCES OR PROCEDURES, TIME OF PERFORMANCE, PROGRAMS OR FOR ANY SAFETY PRECAUTIONS USED BY THE INDIVIDUAL SUBCONTRACTOR. THE INDIVIDUAL SUBCONTRACTOR IS SOLELY RESPONSIBLE FOR EXECUTION OF HIS WORK IN ACCORDANCE WITH THE CONTRACT DOCUMENTS AND SPECIFICATIONS.

25. ALL INDIVIDUAL SUBCONTRACTORS AND THEIR SUBCONTRACTORS OR ANY TIER SHALL INDEMNIFY THE OWNER, ENGINEER, AND ARCHITECT FROM ALL LIABILITY RESULTING FROM ANY NEGLIGENT ACT OR OMISSION WITH THEIR CONSTRUCTION, INSTALLATION, AND TESTING OF WORK ON THIS PROJECT AND SHALL NAME THEM AS ADDITIONAL INSURED ON THEIR COMMERCIAL GENERAL LIABILITY POLICIES FOR CLAIMS ARISING OUT OF THE WORK ON THIS PROJECT. A PROPER CERTIFICATE OF INSURANCE SHALL BE ISSUED PRIOR TO THE START OF CONSTRUCTION.

GENERAL NOTES (CONT.)

26. ELECTRIC, TELEPHONE, NATURAL GAS, AND OTHER UTILITY COMPANIES HAVE UNDERGROUND AND/OR OVERHEAD SERVICE FACILITIES IN THE VICINITY OF THE PROPOSED WORK. THE CONTRACTOR SHALL BE RESPONSIBLE FOR HAVING THE UTILITY COMPANIES LOCATE THEIR FACILITIES IN THE FIELD PRIOR TO CONSTRUCTION AND SHALL ALSO BE RESPONSIBLE FOR THE MAINTENANCE AND PRESERVATION OF THESE FACILITIES. THE CONTRACTOR SHALL CALL 811 FOR UTILITY LOCATIONS.

28. THE INDIVIDUAL SUBCONTRACTOR TO HAVE A COMPETENT SUPERINTENDENT ON THE PROJECT SITE AT ALL TIMES IRRESPECTIVE OF THE AMOUNT OF WORK SUBLET THE SUPERINTENDENT SHALL BE CAPABLE OF READING AND UNDERSTANDING THE PLANS AND SPECIFICATIONS, SHALL HAVE FULL AUTHORITY TO EXECUTE ORDERS TO EXPEDITE THE PROJECT, AND SHALL BE RESPONSIBLE FOR SCHEDULING AND HAVE CONTROL OF ALL WORK AS THE AGENT OF THE INDIVIDUAL SUBCONTRACTOR. FAILURE TO COMPLY WITH THIS PROVISION WILL RESULT IN A SUSPENSION OF WORK.

29. THE INDIVIDUAL SUBCONTRACTOR SHALL KEEP A SET OF "APPROVED" CONSTRUCTION PLANS ON THE JOB SITE, AND SHALL MAINTAIN (AS INDICATED HEREIN AND ELSEWHERE WITHIN THESE CONSTRUCTION NOTES, SPECIFICATIONS, AND PLANS) A LEGIBLE RECORD ON SAID PLANS OF AND FIELD TILE ENCOUNTERED, ANY MODIFICATIONS TO ALIGNMENT AND/OR TO PLANS AND SPECIFICATIONS OF PROPOSED IMPROVEMENTS, ETC. UPON COMPLETION OF THE INDIVIDUAL SUBCONTRACTOR' WORK, SAID PLANS AND INFORMATION SHALL BE PROVIDED TO ENGINEER. FINAL CONTRACT PAYMENT SHALL NOT COME DUE UNTIL THIS INFORMATION IS RECEIVED BY THE ENGINEER.

30. UPON COMPLETION OF THE PROJECT, THE DEVELOPER SHALL PROVIDE FINAL "RECORD DRAWINGS" (DIGITAL CAD AND PDF FILES, PLUS 1 MYLAR SEPIA REPRODUCIBLE, SIGNED AND SEALED BY THE ENGINEER) OF ALL INFORMATION NECESSARY FOR PERMIT CONSENT AND MUNICIPAL ACCEPTANCE. THIS MAY INCLUDE (BUT NOT LIMITED TOO) UTILITIES WHICH INCLUDE THE LOCATIONS AND ELEVATIONS OF MAINS, SERVICE LINES, STRUCTURES, PAVED AREAS, SITE GRADING (INCLUDING ADA AREAS), STORMWATER FACILITIES, STREET LIGHTS, CURBS AND MONUMENTS. FINAL DRAWINGS MUST ALSO INCLUDE A STATE PLANE COORDINATE SYSTEM TIE-IN. IN ADDITION TO THE DRAWINGS, AND ELECTRONIC FILE (IN DWG OR DGN FORMAT) OF THE RECORD DRAWINGS MUST BE SUBMITTED ON CD-ROM.

EARTHWORK

1. WORK UNDER THIS SECTION SHALL INCLUDE, BUT NOT BE LIMITED TO, THE FOLLOWING:
   - A. CLEARING AND REMOVAL OF ALL UNDESIRABLE TREES AND OTHER VEGETATIVE GROWTH WITHIN THE CONSTRUCTION AREA. TREE REMOVAL SHALL BE AS DESIGNATED BY THE OWNER AND SHALL BE KEPT TO A MINIMUM. WHERE FEASIBLE, AND WHEN PERMITTED BY OWNER, TREES AND BRUSH GENERATED MAY BE BURIED ONSITE IN FUTURE YARD AND OPEN SPACE AREAS. IF ADEQUATE AND APPROPRIATE SPACE IS NOT AVAILABLE FOR ONSITE BURIAL, THE TREES AND BRUSH SHALL BE DISPOSED OF OFFSITE. BURNING IS NOT PERMITTED
   - B. STRIPPING OF TOPSOIL FROM ALL STREET, DRIVEWAY, PARKING AREA, RIGHT-OF-WAY, BUILDING PAD, AND OTHER DESIGNATED STRUCTURAL AREAS.
   - C. STOCKPILING OF TOPSOIL AT LOCATIONS AS DIRECTED BY THE OWNER. TOPSOIL STOCKPILED FOR FUTURE USE SHALL BE RELATIVELY FREE FROM LARGE ROOTS, STICKS, WEEDS, BRUSH, STONES LARGER THAN ONE INCH DIAMETER, OR OTHER LITTER AND WASTE PRODUCTS INCLUDING EXTRANEOUS MATERIALS NOT CONDUCIVE TO PLANT GROWTH. TOPSOIL SHALL BE STOCKPILED IN SEQUENCE TO ELIMINATE ANY REHANDLING OR DOUBLE MOVEMENTS BY THE CONTRACTOR. FAILURE TO PROPERLY SEQUENCE THE STOCKPILING OPERATIONS SHALL NOT CONSTITUTE A CLAIM FOR ADDITIONAL COMPENSATION. NO MATERIAL SHALL BE STOCKPILED IN FRONT YARDS, OVERLAND DRAINAGE SWALES (FLOOD ROUTING AREAS), PROPOSED UTILITY LOCATIONS, UTILITY EASEMENTS, OR IN THE RIGHT-OF-WAY AND SHALL BE SURROUNDED BY SILT FENCE.
   - D. REMOVING UNSUITABLE MATERIALS AS SPECIFIED FROM ROADWAY, DRIVEWAY/PARKING, BUILDING PAD, AND OTHER DESIGNATED AREAS.
   - E. DEMOLITION AND REMOVAL OF EXISTING PAVEMENTS INCLUDING OFFSITE DISPOSAL OF SAME, AT A DUMP SITE AS SELECTED BY THE CONTRACTOR. ONSITE DISPOSAL MAY BE ALLOWED IF APPROVED BY THE OWNER.
   - F. CLAY CUT AND CLAY FILL WITH COMPACTION WITHIN ROADWAY, DRIVEWAY/PARKING, BUILDING PAD, AND OTHER DESIGNATED AREAS.
   - G. EXCAVATION AND GRADING OF THE OPEN SPACE AND/OR YARD AREAS PER PLAN INCLUDING DESIGNATED DETENTION BASIN GRADING, CONSTRUCTION OF BERMS, ETC.
   - H. PLACEMENT AND COMPACTION OF CLAY TO THE DESIGN SUBGRADE ELEVATIONS AS REQUIRED BY THE STANDARDS AND DETAILS ON THE CONSTRUCTION PLANS. THE CONTRACTOR WILL NOTE THAT THE ELEVATIONS SHOWN ON THE CONSTRUCTION PLANS ARE FINISHED GRADE ELEVATIONS AND THAT PAVEMENT AND/OR TOPSOIL REPLACEMENT THICKNESS MUST BE SUBTRACTED TO DETERMINE SUBGRADE ELEVATIONS.
   - I. PLACEMENT AND COMPACTION OF NON-STRUCTURAL FILLS.
   - J. AS REQUIRED, REMOVAL FROM SITE AND DISPOSAL OF ANY EXCESS OR UNSUITABLE MATERIAL UPON COMPLETION OF MASS GRADING.
   - K. MOVEMENT AND COMPACTION OF SPOIL MATERIAL FROM THE CONSTRUCTION OF UNDERGROUND UTILITIES.
   - L. BACKFILLING OF CURBS AND/OR PAVEMENT AND SIDEWALK AFTER INSTALLATION OF SAME IN ACCORDANCE WITH THE CONTRACT DOCUMENTS.
   - M. FINAL SHAPING AND TRIMMING TO THE LINES, GRADES, AND CROSS SECTIONS SHOWN IN THESE PLANS; AND TOPSOIL PLACEMENT TO DESIGN FINISHED GRADE ELEVATIONS AT LOCATIONS DESIGNATED IN THE CONTRACT DOCUMENTS.
   - N. SOIL EROSION CONTROL MEASURES IN ACCORDANCE WITH THE SOIL EROSION CONTROL SPECIFICATIONS INCLUDED WITHIN THE CONTRACT DOCUMENTS.
2. THE QUANTITIES GIVEN IN THE ENGINEER'S SUMMARY FOR EARTHWORK ARE INTENDED AS A GUIDE FOR THE CONTRACTOR IN DETERMINING THE SCOPE OF THE COMPLETED PROJECT. THE CONTRACTOR SHALL ASSUME SOLE RESPONSIBILITY FOR THE COMPUTATIONS OF ALL GRADING AND PRODUCTION, LAND BALANCING, INCLUDING FINISHING SOIL. THE CONTRACTOR SHALL IMPORT OR EXPORT MATERIAL AS NECESSARY TO COMPLETE THE PROJECT. CONTRACTOR SHALL NOTIFY OWNER OF THE NEED TO IMPORT OR HAUL OFF SOIL. ON-SITE LOCATIONS SUITABLE FOR BORROW OR FILL MAY BE DESIGNATED BY THE OWNER. THE CONTRACT PRICE SUBMITTED BY THE CONTRACTOR SHALL BE CONSIDERED AS LUMP SUM FOR THE COMPLETE PROJECT. NO CLAIMS FOR EXTRA WORK WILL BE RECOGNIZED UNLESS ORDERED IN WRITING BY THE OWNER.
3. PRIOR TO ONSET OF MASS GRADING OPERATIONS, THE EARTHWORK CONTRACTOR SHALL FAMILIARIZE HIMSELF WITH THE SOIL EROSION CONTROL SPECIFICATIONS. THE INITIAL ESTABLISHMENT OF EROSION CONTROL PROCEDURES AND THE PLACEMENT OF FILTER FENCING, ETC. TO PROTECT ADJACENT PROPERTIES SHOULD OCCUR BEFORE MASS GRADING BEGINS, AND IN ACCORDANCE WITH THE SOIL EROSION CONTROL CONSTRUCTION SCHEDULE.
4. PRIOR TO COMMENCEMENT OF GRADING ACTIVITIES, A TREE PROTECTION FENCE SHALL BE ERECTED AROUND ANY TREE DESIGNATED ON THE PLANS TO BE PRESERVED. SAID FENCE SHALL BE PLACED IN A CIRCLE CENTERED AROUND THE TREE, THE DIAMETER OF WHICH SHALL BE SUCH THAT THE ENTIRE DRIP ZONE (EXTENT OF FURTHEST EXTENDING BRANCHES) SHALL BE WITHIN THE FENCED AREA. THE FENCED AREA SHALL NOT BE DISTURBED.
5. THE GRADING OPERATIONS ARE TO BE CLOSELY SUPERVISED AND INSPECTED, PARTICULARLY DURING THE REMOVAL OF UNSUITABLE MATERIAL AND THE CONSTRUCTION OF EMBANKMENTS OR BUILDING PADS, BY THE SOILS ENGINEER OR HIS REPRESENTATIVE. ALL TESTING, INSPECTION AND SUPERVISION OF SOIL QUALITY, UNSUITABLE REMOVAL, REPLACEMENT, MODIFICATION AND OTHER SOILS RELATED OPERATIONS SHALL BE ENTIRELY THE RESPONSIBILITY OF THE SOILS ENGINEER.
6. A QUALIFIED SOILS ENGINEER SHALL REGULARLY INSPECT THE EXCAVATION OF ANY OPEN WATER AREAS TO INSURE THAT THEY WILL BE CAPABLE OF MAINTAINING DESIGNED NORMAL WATER LEVELS. GRAVEL OR SAND SEAMS OR OTHER CONDITIONS WHICH MAY BE ENCOUNTERED, AND WHICH MIGHT TEND TO DE-WATER THESE AREAS, SHALL BE REMEDIED AS DIRECTED BY THE SOILS ENGINEER. FAILURE TO COMPLY WITH THIS PROVISION WILL RESULT IN A SUSPENSION OF WORK.
7. THE GRADING AND CONSTRUCTION OF THE SITE IMPROVEMENTS SHALL NOT CAUSE PONDING OF STORMWATER. ALL AREAS ADJACENT TO THESE IMPROVEMENTS SHALL BE GRADED TO ALLOW POSITIVE DRAINAGE.
8. THE PROPOSED GRADING ELEVATIONS SHOWN ON THE PLANS ARE FINISHED GRADE. TOPSOIL OF THE THICKNESS SHOWN IN THE STANDARDS AND DETAILS ON THE CONSTRUCTION PLANS IS TO BE PLACED BEFORE FINISHED GRADE ELEVATIONS ARE ACHIEVED.
9. THE SELECTED STRUCTURAL FILL MATERIAL SHALL BE PLACED IN LEVEL UNIFORM LAYERS SO THAT THE COMPACTED THICKNESS IS APPROXIMATELY SIX INCHES; IF COMPACTION EQUIPMENT DEMONSTRATES THE ABILITY TO COMPACT GREATER THICKNESS, THEN A GREATER THICKNESS MAY BE ALLOWED WITH APPROVAL FROM SOILS ENGINEER. EACH LAYER SHALL BE THOROUGHLY MIXED DURING SPREADING TO INSURE UNIFORMITY.
10. EMBANKMENT MATERIAL WITHIN ROADWAY, DRIVEWAY, PARKING AREAS, AND OTHER STRUCTURAL CLAY FILL AREAS SHALL BE COMPACTED TO A MINIMUM OF NINETY PERCENT (90%) OF MAXIMUM DENSITY IN ACCORDANCE WITH ASTM SPECIFICATION D-1557 (MODIFIED PROCTOR METHOD), OR TO SUCH OTHER DENSITY AS MAY BE DETERMINED APPROPRIATE BY THE SOILS ENGINEER. EMBANKMENT MATERIAL FOR BUILDING PADS SHALL BE COMPACTED TO A MINIMUM OF NINETY FIVE PERCENT (95%) OF MAXIMUM DENSITY IN ACCORDANCE WITH ASTM DESIGNATION D-1557 (MODIFIED PROCTOR METHOD), OR TO SUCH OTHER DENSITY AS MAY BE DETERMINED APPROPRIATE BY THE SOILS ENGINEER.
11. EMBANKMENT MATERIAL (RANDOM FILL) WITHIN NON-STRUCTURAL FILL AREAS SHALL BE COMPACTED TO A MINIMUM OF EIGHTY FIVE PERCENT (85%) OF MAXIMUM DENSITY IN ACCORDANCE WITH ASTM SPECIFICATION D-1557 (MODIFIED PROCTOR METHOD), OR TO SUCH OTHER DENSITY AS MAY BE DETERMINED APPROPRIATE BY THE SOILS ENGINEER.
12. THE SURFACE VEGETATION, TOPSOIL, AND ANY OBVIOUSLY SOFT UNDERLYING SOIL SHOULD BE STRIPPED FROM ALL AREAS TO RECEIVE CLAY FILL. IF THE UNDERLYING SUBGRADE SOILS RUT DEEPER THAN ONE INCH UNDER THE CONSTRUCTION EQUIPMENT OR IF THE MOISTURE CONTENT EXCEEDS THAT NEEDED FOR PROPER COMPACTION, THE SOIL SHALL BE SCARIFIED, DRIED AND RECOMPACTED TO THE REQUIRED SPECIFICATIONS (SEE SECTION 207 OF THE WISDOT SPECIFICATIONS).
13. PRIOR TO UTILITY CONSTRUCTION, PROPOSED PAVEMENT AREAS, BUILDING PADS, DRIVEWAYS AND SIDEWALKS, AND YARD/OPEN SPACE AREAS SHALL BE ROUGH EXCAVATED OR FILLED TO PLUS OR MINUS ONE FOOT OF DESIGN SUBGRADE ELEVATIONS BY THE CONTRACTOR.
14. COMPLETED GRADING FOR PROPOSED BUILDING PADS, AS WELL AS PROPOSED SUBGRADE AREAS FOR PAVEMENT, DRIVEWAYS AND SIDEWALKS, AND YARD/OPEN SPACE AREAS SHALL BE WITHIN A TOLERANCE OF PLUS OR MINUS 0.1 FOOT OF DESIGN SUBGRADE ELEVATIONS.
15. THE SUBGRADE FOR PROPOSED STREET AND PAVEMENT AREAS SHALL BE PROOF-ROLLED BY THE CONTRACTOR AND ANY UNSTABLE AREAS ENCOUNTERED SHALL BE REMOVED AND REPLACED AS DIRECTED BY THE SOILS ENGINEER.
16. UPON COMPLETION OF THE SURFACE IMPROVEMENTS, AND EXCEPT WHERE OTHERWISE NOTED, THE EXCAVATION CONTRACTOR SHALL RESPREAD A MINIMUM OF 6 INCHES OF TOPSOIL ON ALL DESIGNATED OPEN SPACE, PARKWAY, LANDSCAPE, AND OTHER NON-STRUCTURAL AREAS PER PLAN. SAID DESIGNATED AREAS TO BE RESPREAD BY THE EXCAVATION CONTRACTOR SHALL BE AS INDICATED WITHIN THE CONTRACT DOCUMENTS. TOPSOIL SHALL BE RESPREAD ON THE REMAINING AREAS BY THE LANDSCAPE CONTRACTOR.
17. RIPRAP MATERIAL TO BE PROVIDED IN CONJUNCTION WITH THE EARTHWORK IMPROVEMENTS SHALL CONFORM TO WISDOT SPECIFICATIONS.
19. THE CONTRACTOR IS RESPONSIBLE FOR VERIFYING SOIL CONDITIONS PRIOR TO COMMENCEMENT OF CONSTRUCTION. A GEOTECHNICAL REPORT MAY BE AVAILABLE FROM THE OWNER, IS SOLELY FOR THE INFORMATION AND GUIDANCE OF THE CONTRACTORS. THE OWNER AND ENGINEER MAKE NO REPRESENTATION OR WARRANTY REGARDING THE INFORMATION CONTAINED IN THE BORING LOGS. THE CONTRACTOR SHALL MAKE HIS OWN INVESTIGATIONS AND SHALL PLAN HIS WORK ACCORDINGLY. ARRANGEMENTS TO ENTER THE PROPERTY DURING THE BIDDING PHASE MAY BE MADE UPON REQUEST OF THE OWNER. THERE WILL BE NO ADDITIONAL PAYMENT FOR EXPENSES INCURRED BY THE CONTRACTOR RESULTING FROM ADVERSE SOIL OR GROUND WATER CONDITIONS.
20. IF SHOWN ON THE PLANS, OPEN AREAS TO BE SEEDED SHALL BE SEEDED IN ACCORDANCE WITH THE SOIL EROSION CONTROL SPECIFICATIONS AND FINAL LANDSCAPE PLAN.
21. IT SHALL BE THE RESPONSIBILITY OF THE EXCAVATION CONTRACTOR TO REMOVE FROM THE SITE ANY AND ALL MATERIALS AND DEBRIS WHICH RESULT FROM HIS CONSTRUCTION OPERATIONS AT NO ADDITIONAL EXPENSE TO THE OWNER.
22. SOILS ENGINEER SHALL BE ON SITE DURING ALL EARTHWORK OPERATIONS, PAVING, AND CONCRETE PREPARATION AND POUR.

UNDERGROUND UTILITIES

1. WORK UNDER THIS SECTION SHALL INCLUDE TRENCHING, AUGERING AND INSTALLATION OF PIPE, CASTINGS, STRUCTURES, BACKFILLING OF TRENCHES AND COMPACTION, AND TESTING AS SHOWN ON THE CONSTRUCTION PLANS. FITTINGS AND ACCESSORIES NECESSARY TO COMPLETE THE WORK MAY NOT BE SPECIFIED BUT SHALL BE CONSIDERED AS INCIDENTAL TO THE COST OF THE CONTRACT.
2. ALL SEWER AND WATER MAIN SHALL BE CONSTRUCTED IN ACCORDANCE WITH THE "STANDARD SPECIFICATIONS FOR SEWER AND WATER MAIN CONSTRUCTION IN WISCONSIN, LATEST EDITION, AND THE STANDARD SPECIFICATIONS AND CONSTRUCTION DETAILS AND ORDINANCES OF THE MUNICIPALITY.
3. ROUGH GRADING TO WITHIN ONE FOOT OF FINISHED SUBGRADE SHALL BE COMPLETED BY THE EARTHWORK CONTRACTOR PRIOR TO COMMENCEMENT OF UNDERGROUND UTILITY INSTALLATION.
4. ALL UTILITY TRENCHES BENEATH PROPOSED OR EXISTING UTILITIES, PROPOSED OR EXISTING PAVEMENT, EXISTING DRIVEWAYS AND SIDEWALKS, PROPOSED DRIVEWAYS AND SIDEWALKS WHERE DESIGNATED BY TH

THESE PLANS AND DESIGNS ARE COPYRIGHT PROTECTED AND MAY NOT BE USED IN WHOLE OR IN PART WITHOUT THE WRITTEN CONSENT OF PINNACLE ENGINEERING GROUP, LLC

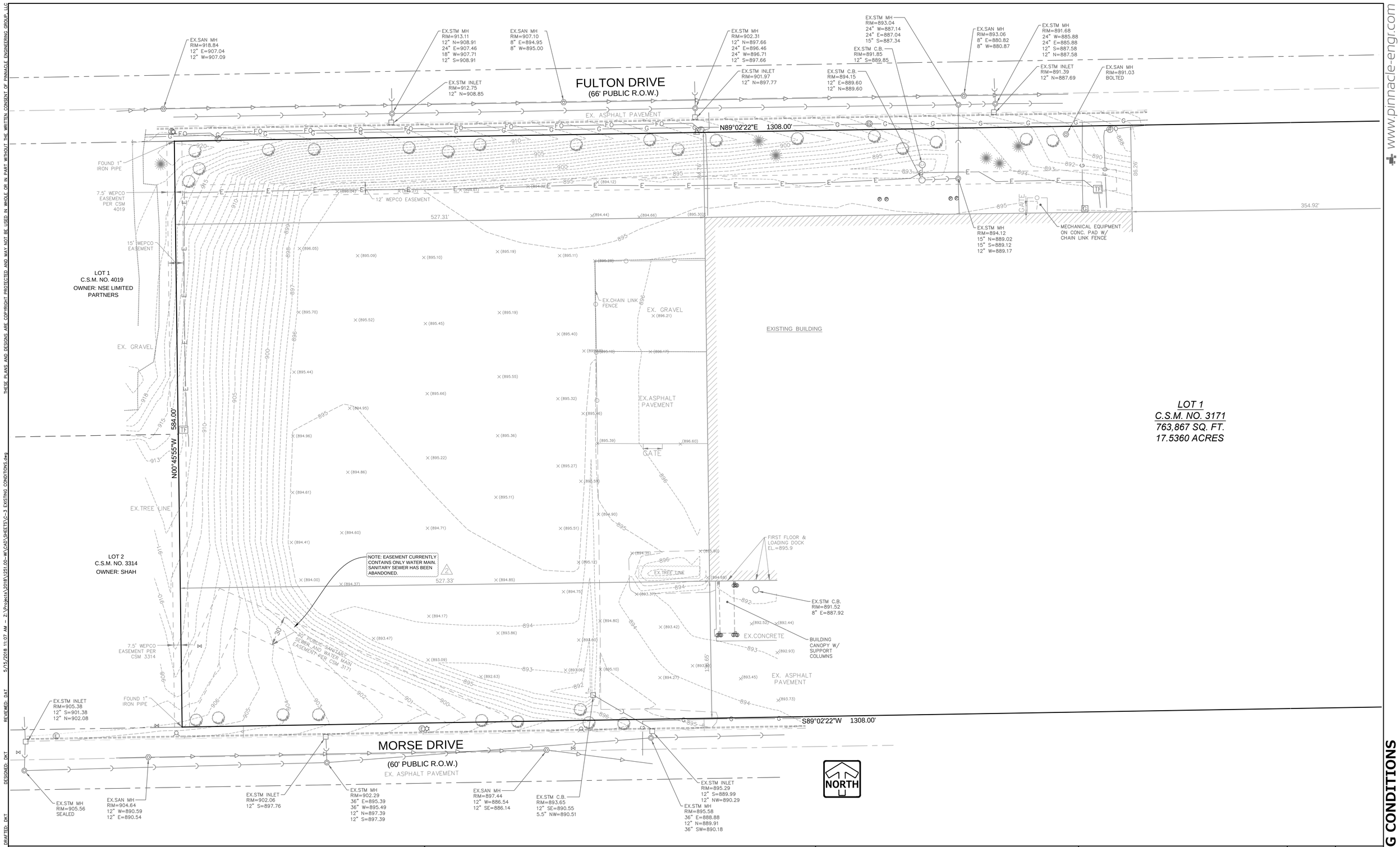

LOT 1
C.S.M. NO. 3171
763,867 SQ. FT.
17.5360 ACRES

www.pinnacle-engr.com

5/15/2018 11:07 AM - Z:\Projects\2018\251.00-WI\CAD\SHEETS\C-3 EXISTING CONDITIONS.dwg

DRAFTED: DKT DESIGNED: DKT REVIEWED: DAT

PLAN I DESIGN I DELIVER
www.pinnacle-engr.com
PINNACLE ENGINEERING GROUP
ENGINEERING I NATURAL RESOURCES I SURVEYING
CHICAGO OFFICE:
1051 E. MAIN ST. | SUITE 217
EAST DUNDEE, IL 60118
(847) 551-5300
CHICAGO I MILWAUKEE : NATIONWIDE

WACKER NEUSON - GERMANTOWN STORAGE EXPANSION AREA

GERMANTOWN, WISCONSIN

REVISIONS

1	ISSUE FOR PERMIT	04/13/18
2	PER VILLAGE REVIEW	05/10/18

EXISTING CONDITIONS

PEG JOB No. 251.00-WI
PEG PM DAT
START DATE 04/13/18
SCALE 1"=40'

SHEET C-3 OF C-6

© COPYRIGHT 2018

EXISTING CONDITIONS

THESE PLANS AND DESIGNS ARE COPYRIGHT PROTECTED AND MAY NOT BE USED IN WHOLE OR IN PART WITHOUT THE WRITTEN CONSENT OF PINNACLE ENGINEERING GROUP, LLC

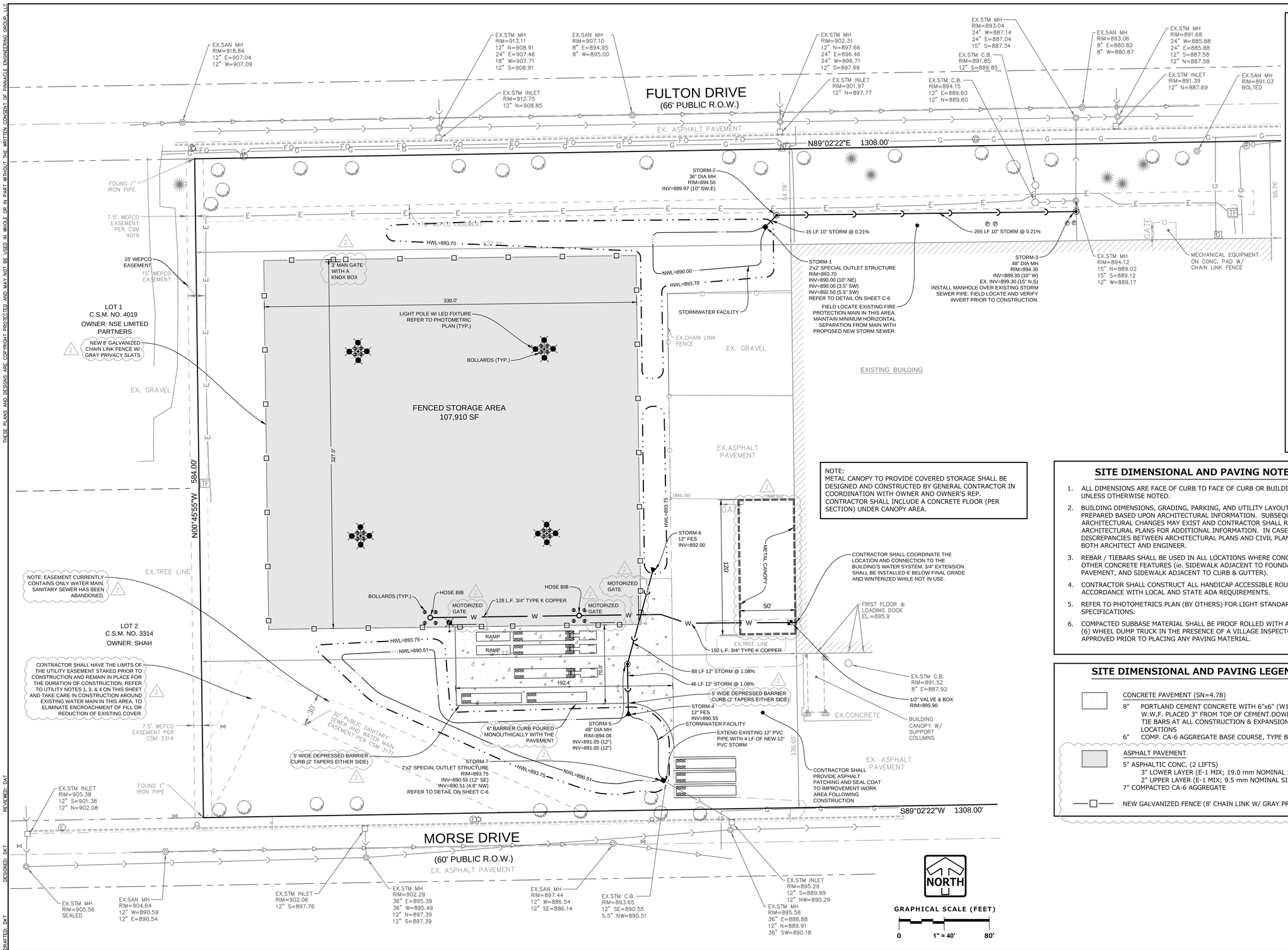

NOTE:
METAL CANOPY TO PROVIDE COVERED STORAGE SHALL BE DESIGNED AND CONSTRUCTED BY GENERAL CONTRACTOR IN COORDINATION WITH OWNER AND OWNER'S REP. CONTRACTOR SHALL INCLUDE A CONCRETE FLOOR (PER SECTION) UNDER CANOPY AREA.

UTILITY NOTES

1. CONTRACTOR SHALL NOTIFY THE OWNER, ENGINEER AND 811 OR DIGGERS HOTLINE AT LEAST 48 HOURS IN ADVANCE OF PERFORMING ANY WORK AND NOTIFY ENGINEERING OF ANY CONFLICTS WITH THE PROPOSED IMPROVEMENTS.
2. CONTRACTOR SHALL BE RESPONSIBLE FOR OBTAINING ALL PERMITS REQUIRED FOR UTILITY CONSTRUCTION.
3. ALL EXISTING INFORMATION AND EXISTING UTILITIES SHOWN ON THIS PLAN HAVE BEEN DETERMINED FROM THE BEST INFORMATION AVAILABLE AND ARE GIVEN FOR THE CONVENIENCE OF THE CONTRACTOR. THE ENGINEER ASSUMES NO RESPONSIBILITY FOR THEIR ACCURACY. PRIOR TO THE START OF ANY DEMOLITION ACTIVITY, THE CONTRACTOR SHALL NOTIFY THE UTILITY COMPANIES FOR LOCATION OF EXISTING UTILITIES.
4. ALL UTILITIES SHALL BE COORDINATED WITH THE APPROPRIATE UTILITY COMPANY OR AGENCY.
5. BUILDING DIMENSIONS, GRADING, PARKING, AND UTILITY LAYOUT HAVE BEEN PREPARED BASED UPON ARCHITECTURAL INFORMATION. SUBSEQUENT ARCHITECTURAL CHANGES MAY EXIST AND CONTRACTOR SHALL REFER TO ARCHITECTURAL PLANS FOR ADDITIONAL INFORMATION. IN CASE OF DISCREPANCIES BETWEEN ARCHITECTURAL PLANS AND CIVIL PLANS, THE CIVIL PLANS SHALL TAKE PRECEDENCE.
6. CONTRACTOR SHALL VERIFY LOCATION, SIZE, AND ELEVATION OF ALL BUILDING SERVICES WITH ARCHITECTURAL AND MEP PLANS.
7. CONTRACTOR SHALL ADJUST ALL RIM ELEVATIONS OF EXISTING STRUCTURES TO PROPOSED GRADE.
8. ALL UTILITY DIMENSIONS ARE TO CENTER OF PIPE OR CENTER OF STRUCTURE UNLESS OTHERWISE NOTED.
9. CONTRACTOR SHALL CONTACT EACH UTILITY COMPANY AND COORDINATE FINAL LOCATIONS OF ALL ELECTRIC, GAS, AND TELEPHONE SERVICES PRIOR TO START OF CONSTRUCTION. ALL UTILITY SLEEVES AND PIPE SHALL BE INCLUDED IN BID.
10. CONTRACTOR SHALL LOCATE ALL EXISTING SEWER AND WATERMAIN LOCATION, SIZE, ELEVATION, AND CONDITION AT POINTS OF CONNECTION AND WHERE PROPOSED UTILITIES SHALL CROSS OR POTENTIALLY COME IN CONFLICT WITH EXISTING LINES PRIOR TO CONSTRUCTION. CONTRACTOR SHALL NOTIFY ENGINEERING OF ANY DISCREPANCIES OR CONFLICTS.
11. LIGHTING IS SHOWN FOR REFERENCE ONLY. REFER TO PHOTOMETRICS PLAN FOR CONSTRUCTION.
12. UNDERGROUND IMPROVEMENTS SHALL BE CONSTRUCTED AND TESTED IN ACCORDANCE WITH THE VILLAGE, (INCLUDING THE PRESENCE OF A VILLAGE INSPECTOR DURING THE PRESSURE TESTING AND CHLORINATION OF THE WATER LINE) THE STANDARD SPECIFICATIONS FOR SEWER AND WATER IN WISCONSIN, STANDARD SPECIFICATIONS FOR HIGHWAY & STRUCTURE CONSTRUCTION, AND WISCONSIN ADMINISTRATIVE CODE, SPS360, 382-383. IN THE EVENT OF CONFLICTING GUIDELINES, THE MORE RESTRICTIVE SHALL GOVERN.
13. ALL WATERMAIN SHALL BE CONSTRUCTED WITH A MINIMUM 6.0' OF COVER.

SITE DIMENSIONAL AND PAVING NOTES

1. ALL DIMENSIONS ARE FACE OF CURB TO FACE OF CURB OR BUILDING FACE UNLESS OTHERWISE NOTED.
2. BUILDING DIMENSIONS, GRADING, PARKING, AND UTILITY LAYOUT HAVE BEEN PREPARED BASED UPON ARCHITECTURAL INFORMATION. SUBSEQUENT ARCHITECTURAL CHANGES MAY EXIST AND CONTRACTOR SHALL REFER TO ARCHITECTURAL PLANS FOR ADDITIONAL INFORMATION. IN CASE OF DISCREPANCIES BETWEEN ARCHITECTURAL PLANS AND CIVIL PLANS, NOTIFY BOTH ARCHITECT AND ENGINEER.
3. REBAR / TIEBARS SHALL BE USED IN ALL LOCATIONS WHERE CONCRETE ABUTS OTHER CONCRETE FEATURES (ie. SIDEWALK ADJACENT TO FOUNDATION WALL, PAVEMENT, AND SIDEWALK ADJACENT TO CURB & GUTTER).
4. CONTRACTOR SHALL CONSTRUCT ALL HANDICAP ACCESSIBLE ROUTES IN ACCORDANCE WITH LOCAL AND STATE ADA REQUIREMENTS.
5. REFER TO PHOTOMETRICS PLAN (BY OTHERS) FOR LIGHT STANDARDS AND SPECIFICATIONS.
6. COMPACTED SUBBASE MATERIAL SHALL BE PROOF ROLLED WITH A LOADED SIX (6) WHEEL DUMP TRUCK IN THE PRESENCE OF A VILLAGE INSPECTOR, AND APPROVED PRIOR TO PLACING ANY PAVING MATERIAL.

SITE DIMENSIONAL AND PAVING LEGEND

CONCRETE PAVEMENT (SN=4.78)

8" PORTLAND CEMENT CONCRETE WITH 6"x6" (W1.4xW1.4) W.W.F. PLACED 3" FROM TOP OF CEMENT.DOWEL AND TIE BARS AT ALL CONSTRUCTION & EXPANSION JOINT LOCATIONS

6" COMP. CA-6 AGGREGATE BASE COURSE, TYPE B

ASPHALT PAVEMENT

5" ASPHALTIC CONC. (2 LIFTS)
3" LOWER LAYER (E-1 MIX; 19.0 mm NOMINAL SIZE)
2" UPPER LAYER (E-1 MIX; 9.5 mm NOMINAL SIZE)
7" COMPACTED CA-6 AGGREGATE

NEW GALVANIZED FENCE (8' CHAIN LINK W/ GRAY PRIVACY SLATS)

UTILITY LEGEND

EXISTING	PROPOSED	
		SANITARY MANHOLE
		STORM MANHOLE
		CATCH BASIN/RISER
		INLET
		PRECAST FLARED END SECTION
		CONCRETE HEADWALL
		VALVE VAULT
		VALVE BOX
		FIRE HYDRANT
		BUFFALO BOX
		CLEANOUT
		SANITARY SEWER
		FORCEMAIN
		STORM SEWER
		WATERMAIN
		STREET LIGHT
		STREET SIGN
		LABELED UTILITY CROSSING

SITE DATA

TOTAL SITE	17.536 ACRES
IMPERVIOUS AREA	9.230 ACRES
PERVIOUS AREA	7.998 ACRES
OPEN WATER AREA	0.308 ACRES
DEVELOPMENT AREA	7.270 ACRES
IMPERVIOUS AREA	4.025 ACRES
PERVIOUS AREA	2.935 ACRES
OPEN WATER AREA	0.308 ACRES
EXISTING ZONING:	M1 LIMITED INDUSTRIAL

ADJACENT ZONING
NORTH: FULTON DRIVE / M1 LIMITED INDUSTRIAL
SOUTH: MORSE DRIVE / M1 LIMITED INDUSTRIAL
EAST: RIVER LANE / RD-2 RESIDENTIAL
WEST: M1 LIMITED INDUSTRIAL

NUMBER OF EMPLOYEES 70

REVIEWED: DAT
DESIGNED: DKT
DRAFTED: DKT

PLAN I DESIGN I DELIVER
www.pinnacle-engr.com

PINNACLE ENGINEERING GROUP
ENGINEERING I NATURAL RESOURCES I SURVEYING
CHICAGO OFFICE:
1051 E. MAIN ST. | SUITE 217
EAST DUNDEE, IL 60118
(847) 551-5300
CHICAGO I MILWAUKEE : NATIONWIDE

WACKER NEUSON - GERMANTOWN STORAGE EXPANSION AREA

GERMANTOWN, WISCONSIN

REVISIONS

1	ISSUE FOR PERMIT	04/13/18
2	PER VILLAGE REVIEW	05/10/18

SITE DIMENSIONAL, PAVING & UTILITY PLAN

PEG JOB No. 251.00-WI
PEG PM DAT
START DATE 04/13/18
SCALE 1"=40'

SHEET C-4 OF C-6

© COPYRIGHT 2018

SITE DIMENSIONAL, PAVING & UTILITY PLAN

www.pinnacle-engr.com

THESE PLANS AND DESIGNS ARE COPYRIGHT PROTECTED AND MAY NOT BE USED IN WHOLE OR IN PART WITHOUT THE WRITTEN CONSENT OF PINNACLE ENGINEERING GROUP, LLC

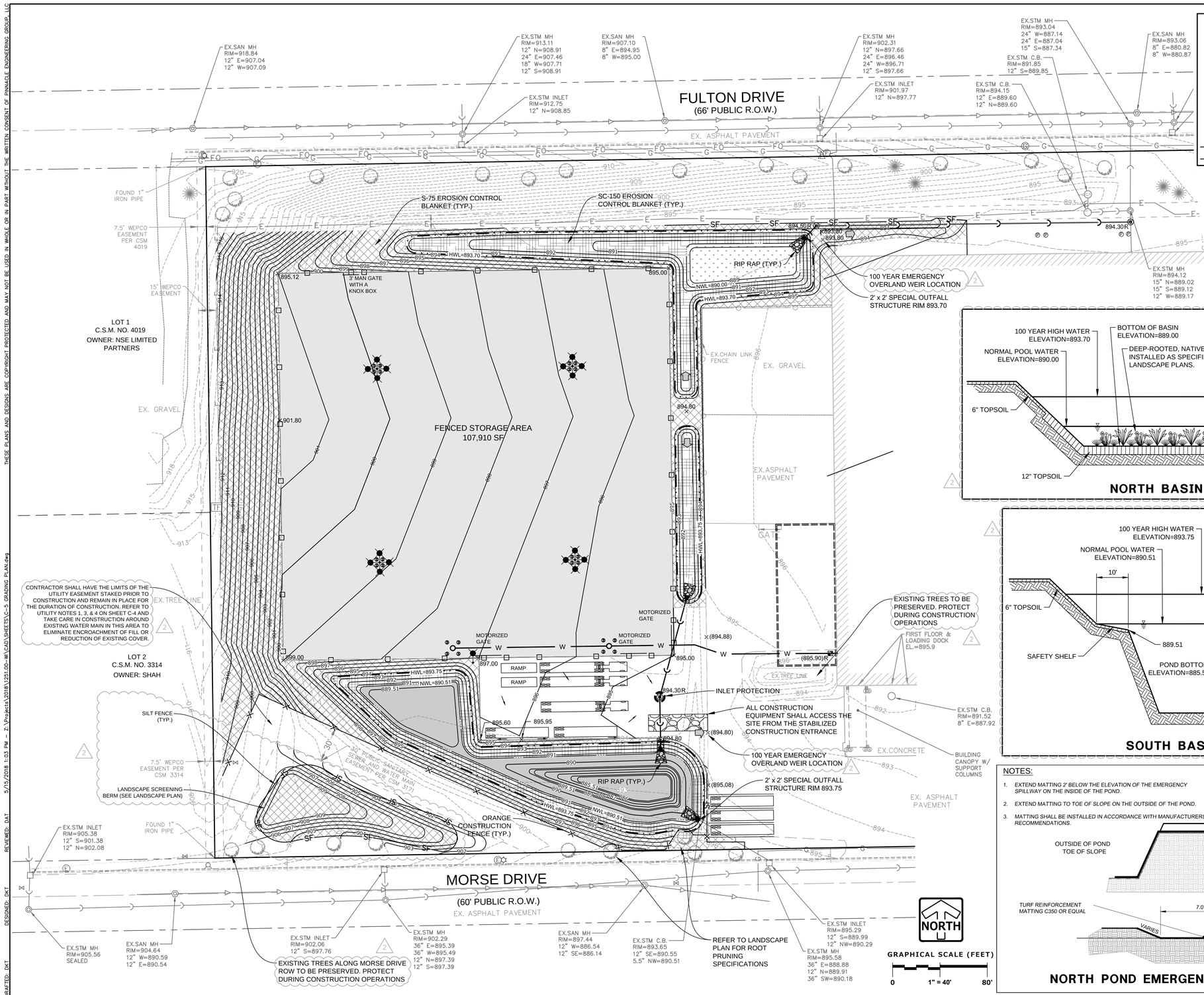

EROSION CONTROL LEGEND

- SEED AND BLANKET — NORTH AMERICAN GREEN S-75 EROSION CONTROL BLANKET (SEE LANDSCAPE PLAN FOR SEED MIX)
- SEED AND BLANKET — NORTH AMERICAN GREEN SC-150 EROSION CONTROL BLANKET (SEE LANDSCAPE PLAN FOR SEED MIX)
- RIP RAP
- INLET PROTECTION
- SF — SILT FENCE
- X — CONSTRUCTION FENCE

GRADING NOTES

1. CONTRACTOR SHALL CONTACT DIGGERS HOTLINE PRIOR TO CONSTRUCTION AND NOTIFY ENGINEERING OF ANY CONFLICTS WITH THE PROPOSED IMPROVEMENTS.
2. BUILDING DIMENSIONS, GRADING, PARKING, AND UTILITY LAYOUT HAVE BEEN PREPARED BASED UPON ARCHITECTURAL INFORMATION. SUBSEQUENT ARCHITECTURAL CHANGES MAY EXIST AND CONTRACTOR SHALL REFER TO ARCHITECTURAL PLANS FOR ADDITIONAL INFORMATION. IN CASE OF DISCREPANCIES BETWEEN ARCHITECTURAL PLANS AND CIVIL PLANS, NOTIFY BOTH ARCHITECT AND ENGINEER.
3. CONTRACTOR SHALL MEET ALL COMPACTION REQUIREMENTS AS SPECIFIED ON SHEET C-2 AND PER WISDOT.
4. CONTRACTOR SHALL CONSTRUCT ALL HANDICAP ACCESSIBLE ROUTES IN ACCORDANCE WITH LOCAL AND STATE ADA REQUIREMENTS.
5. ALL EXISTING AND PROPOSED CONTOURS ARE SHOWN IN 1' INCREMENTS.
6. CONTRACTOR SHALL NOT BLOCK DRAINAGE.
7. CONTRACTOR SHALL ADJUST ALL RIM ELEVATIONS OF EXISTING STRUCTURES TO PROPOSED GRADE.
8. CONTRACTOR SHALL REFER TO PLAN SPECIFICATIONS, SITE STABILIZATION PLAN, AND SWPPP PRIOR TO CONSTRUCTION FOR WATER QUALITY REQUIREMENTS ASSOCIATED WITH LAND DISTURBANCE.

GRADING LEGEND

EXISTING	PROPOSED	
○	●	STORM DRAINAGE STRUCTURE
▷	▶	PRECAST FLARED END SECTION
749	749	CONTOUR
× (750.00)	× 750.00	SPOT ELEVATION
		DIRECTION OF SURFACE FLOW
		SURVEYED TREE
		OVERFLOW RELIEF ROUTING
		SOIL BORING
		PROPOSED RIDGELINE
	4:1	TYPICAL SLOPE

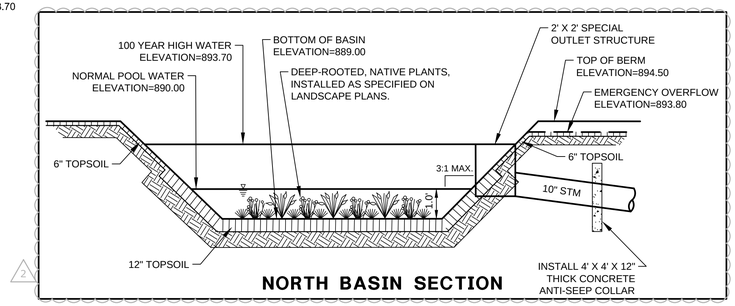

NORTH BASIN SECTION

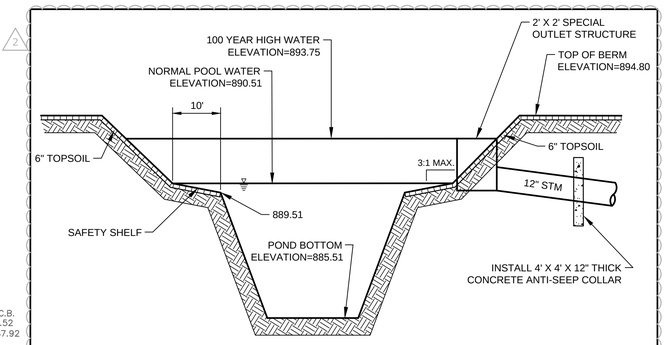

SOUTH BASIN SECTION

ELEVATIONS

1. CONTOURS ARE SHOWN AS FINISHED GRADE.
2. SPOT ELEVATIONS ARE SHOWN AS FLOW LINE ALONG THE CURB AND GUTTER AND FINISHED GRADE ELSE WHERE UNLESS SPECIFIED AS BELOW:
   EP = EDGE OF PAVEMENT
   TC = TOP OF CURB
   ME = MATCH EXISTING
   (636.17) = EXISTING SPOT GRADE

SEQUENCE OF CONSTRUCTION ACTIVITIES

1. INSTALLATION OF SOIL EROSION AND SEDIMENT CONSTROL MEASURES
   a) SILT FENCE INSTALLATION.
   b) STABILIZED CONSTRUCTION ENTRANCE.
   c) INSTALL INLET PROTECTION ON EXISTING OPEN GRATES.
2. TREE REMOVAL WHERE NECESSARY (CLEAR & GRUB).
3. DEMOLITION OF EXISTING BUILDING & PARKING LOT.
4. CONSTRUCT SEDIMENT TRAPPING DEVICES.
5. STRIP TOPSOIL, STOCKPILE TOPSOIL AND GRADE SITE.
6. TEMPORARY STABILIZE TOPSOIL STOCKPILES (SEED AND SILT FENCE AROUND TOE OF SLOPE).
7. CONSTRUCT PROPOSED IMPROVEMENTS.
8. INSTALL STORM SEWER, WATER MAIN, AND ASSOCIATED INLET & OUTLET PROTECTION.
9. TEMPORARILY STABILIZE ALL AREAS INCLUDING AREAS THAT HAVE REACHED TEMPORARY GRADE.
10. INSTALL STRUCTURES AND FINAL GRADE OPEN SPACE.
11. PERMANENTLY STABILIZE OPEN SPACE.

NOTES:

1. *EXTEND MATTING 2' BELOW THE ELEVATION OF THE EMERGENCY SPILLWAY ON THE INSIDE OF THE POND.*
2. *EXTEND MATTING TO TOE OF SLOPE ON THE OUTSIDE OF THE POND.*
3. *MATTING SHALL BE INSTALLED IN ACCORDANCE WITH MANUFACTURERS RECOMMENDATIONS.*

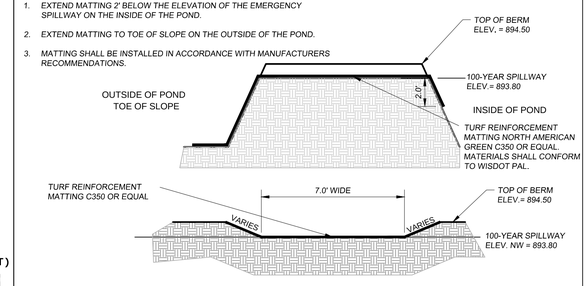

NORTH POND EMERGENCY SPILLWAY

EROSION CONTROL NOTES

1. THE WATER RESOURCES APPLICATION FOR PROJECT PERMIT (WRAPP) AND WDNR PERMIT SHALL BE OBTAINED PRIOR TO ANY EARTH MOVING ACTIVITIES.
2. A COPY OF THE STORMWATER POLLUTION PREVENTION PLAN (SWPPP) WILL BE KEPT ONSITE WITH ALL SUPPLEMENTAL MATERIAL AS REQUIRED BY WDNR GENERAL PERMIT.
3. NO SEDIMENT SHALL BE ALLOWED TO ENTER THE EXISTING STORM SEWER SYSTEM OR BODY OF WATER.
4. STREETS ADJACENT TO THE SITE SHALL BE KEPT FREE OF DIRT, MUD AND DEBRIS.

PLAN I DESIGN I DELIVER
www.pinnacle-engr.com
PINNACLE ENGINEERING GROUP
ENGINEERING I NATURAL RESOURCES I SURVEYING
CHICAGO OFFICE:
1051 E. MAIN ST. | SUITE 217
EAST DUNDEE, IL 60118
(847) 551-5300
CHICAGO I MILWAUKEE : NATIONWIDE

WACKER NEUSON - GERMANTOWN STORAGE EXPANSION AREA

GERMANTOWN, WISCONSIN

REVISIONS

1	ISSUE FOR PERMIT	04/13/18
2	PER VILLAGE REVIEW	05/10/18

GRADING & SITE STABILIZATION PLAN

PEG JOB No. 251.00-WI
PEG PM DAT
START DATE 04/13/18
SCALE 1"=40'

SHEET C-5 OF C-6

© COPYRIGHT 2018

www.pinnacle-engr.com

GRADING & SITE STABILIZATION PLAN

5/15/2018 1:03 PM – Z:\Projects\2018\251.00-WI\CAD\SHEETS\C-5 GRADING PLAN.dwg

REVIEWED: DAT

DESIGNED: DKT

DRAFTED: DKT

THESE PLANS AND DESIGNS ARE COPYRIGHT PROTECTED AND MAY NOT BE USED IN WHOLE OR IN PART WITHOUT THE WRITTEN CONSENT OF PINNACLE ENGINEERING GROUP, LLC

www.pinnacle-engr.com

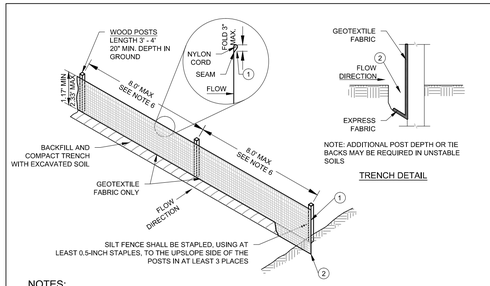

NOTES:

1. ALL SILT FENCE MATERIALS AND INSTALLATION SHALL BE IN CONFORMANCE WITH WI DNR TECHNICAL STANDARD 1056.
2. GEOTEXTILE FABRIC SHALL MEET THE REQUIREMENTS OF MATERIAL SPECIFICATION 592 GEOTEXTILE TABLE 1 OR 2, CLASS I WITH EQUIVALENT OPENING SIZE OF AT LEAST 30 FOR NONWOVEN AND 50 FOR WOVEN.
3. SILT FENCE SHALL BE ANCHORED BY SPREADING AT LEAST 8-INCHES OF FABRIC IN A 4-INCH WIDE AND 6-INCH DEEP TRENCH OR 6-INCH DEEP V-TRENCH ON THE UPSLOPE SIDE OF THE FENCE. TRENCHES SHALL NOT BE EXCAVATED WIDER OR DEEPER THAN NECESSARY FOR PROPER INSTALLATION.
4. FOLD MATERIAL TO FIT TRENCH AND BACKFILL AND COMPACT TRENCH WITH EXCAVATED SOIL.
5. WOOD POSTS SHALL BE A MINIMUM SIZE OF 1.125-INCHES x 1.125-INCHES OF DRIED OAK OR HICKORY.
6. SILT FENCE TO EXTEND ABOVE THE TOP OF PIPE, WHERE APPLICABLE.
7. POST SPACING SHALL BE SELECTED BASED ON GEOTEXTILE FABRIC (8-FEET FOR WOVEN AND 3-FEET FOR NON-WOVEN).

SILT FENCE

#SD02-SEDIMENT

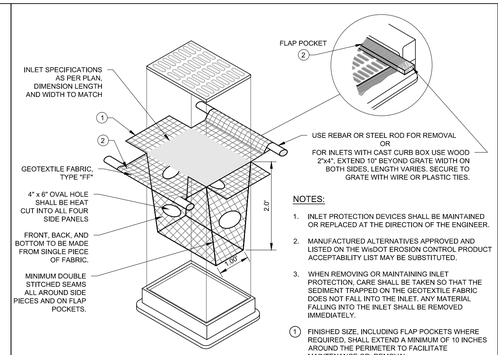

NOTES:

1. INLET PROTECTION DEVICES SHALL BE MAINTAINED OR REPLACED AT THE DIRECTION OF THE ENGINEER.
2. MANUFACTURED ALTERNATIVES APPROVED AND LISTED ON THE WisDOT EROSION CONTROL PRODUCT ACCEPTABILITY LIST MAY BE SUBSTITUTED.
3. WHEN REMOVING OR MAINTAINING INLET PROTECTION, CARE SHALL BE TAKEN SO THAT THE SEDIMENT TRAPPED ON THE GEOTEXTILE FABRIC DOES NOT FALL INTO THE INLET. ANY MATERIAL FALLING INTO THE INLET SHALL BE REMOVED IMMEDIATELY.

(1) FINISHED SIZE, INCLUDING FLAP POCKETS WHERE REQUIRED. SHALL EXTEND A MINIMUM OF 10 INCHES AROUND THE PERIMETER TO FACILITATE MAINTENANCE OR REMOVAL.

(2) FLAP POCKETS SHALL BE LARGE ENOUGH TO ACCEPT WOOD 2 INCH X 4 INCH.

INSTALLATION NOTES:

1. DO NOT INSTALL INLET PROTECTION TYPE "D" IN INLETS SHALLOWER THAN 30 INCHES, MEASURED FROM THE BOTTOM OF THE INLET TO THE TOP OF THE GRATE.
2. TRIM EXCESS FABRIC IN THE FLOW LINE TO WITHIN 3 INCHES OF THE GRATE.
3. THE INSTALLED BAG SHALL HAVE A MINIMUM SIDE CLEARANCE, BETWEEN THE INLET WALLS AND THE BAG, MEASURED AT THE BOTTOM OF THE OVERFLOW HOLES, OF 3 INCHES. WHERE NECESSARY THE CONTRACTOR SHALL CINCH THE BAG, USING PLASTIC ZIP TIES, TO ACHIEVE THE 3 INCHES CLEARANCE. THE TIES SHALL BE PLACED AT A MAXIMUM OF 4 INCHES FROM THE BOTTOM OF THE BAG.

INLET PROTECTION

#105-INLET PROTECTION

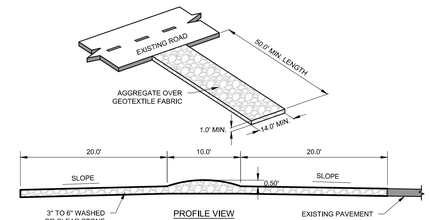

NOTES:

1. ALL TRACKING PAD MATERIALS AND INSTALLATION SHALL BE IN CONFORMANCE WITH WI DNR TECHNICAL STANDARD 1057.
2. TRACKING PADS SHALL BE INSTALLED PRIOR TO ANY TRAFFIC LEAVING THE SITE. CONTRACTOR SHALL VERIFY LOCATION WITH OWNER.
3. THE AGGREGATE FOR TRACKING PADS SHALL BE 3 TO 6 INCH CLEAR OR WASHED STONE. ALL MATERIALS TO BE RETAINED ON A 3-INCH SIEVE
4. THE AGGREGATE SHALL BE PLACED IN A LAYER AT LEAST 12-INCHES THICK. ON SITES WHERE SATURATED CONDITIONS ARE EXPECTED DURING THE LIFE OF THE PAD, THE PAD SHALL BE UNDERLAIN WITH GEOTEXTILE FABRIC WHICH MEETS MATERIAL SPECIFICATION 592 GEOTEXTILE, TABLE 1 OR 2, CLASS I, II OR IV, TO PREVENT MIGRATION OF UNDERLYING SOILS INTO THE STONE LAYER.
5. THE TRACKING PAD SHALL BE THE FULL WIDTH OF THE EGRESS POINT. MINIMUM WIDTH IS 14 FEET FOR ONE-WAY TRAFFIC AND 20 FEET FOR TWO-WAY TRAFFIC, WITH AN ADDITIONAL INCREASE OF 4 FEET FOR TRAILER TRAFFIC. THE TRACKING PAD SHALL BE A MINIMUM 50-FEET LONG.
6. ANY SEDIMENT TRACKED ONTO A PUBLIC OR PRIVATE ROAD SHOULD BE REMOVED BY STREET CLEANING, NOT FLUSHING, AT THE END OF EACH WORKING DAY.
7. TRACKING PADS SHALL, AT A MINIMUM, BE INSPECTED WEEKLY AND WITHIN 24-HOURS AFTER EVERY PRECIPITATION EVENT THAT PRODUCES 0.5-INCHES OF RAIN OR MORE DURING A 24-HOUR PERIOD.
8. THE TRACKING PAD PERFORMANCE SHALL BE MAINTAINED BY SCRAPING OR TOP-DRESSING WITH ADDITIONAL AGGREGATE.

CONSTRUCTION ENTRANCE

#107-CONSTRUCTION ENTRANCE

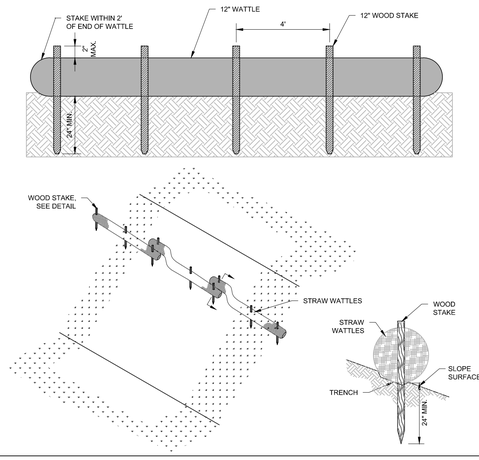

STRAW WATTLE

#137 06/01/15

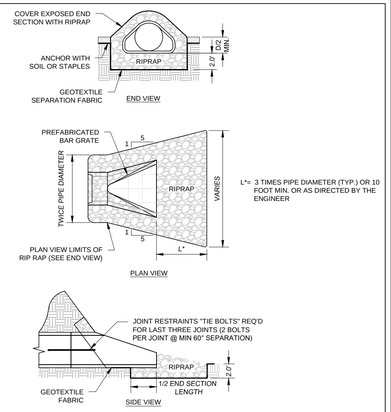

NOTES:

1. RIP RAP AND GEOTEXTILE FABRIC SHALL MEET REQUIREMENTS FOR STANDARD SPECIFICATIONS FOR HIGHWAY AND STRUCTURE CONSTRUCTION.

RIP RAP AT END SECTIONS

#424-1503610

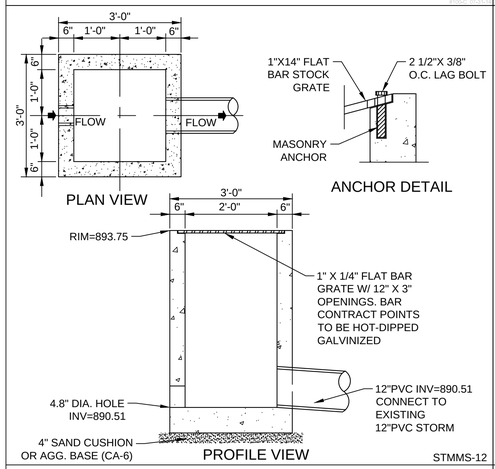

STORM NO. 7 SPECIAL OUTFALL STRUCTURE

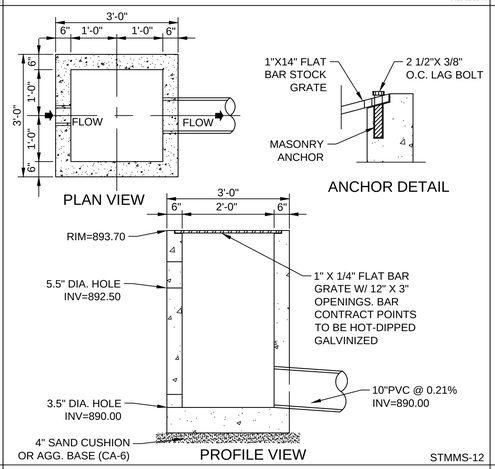

STORM NO. 1 SPECIAL OUTFALL STRUCTURE

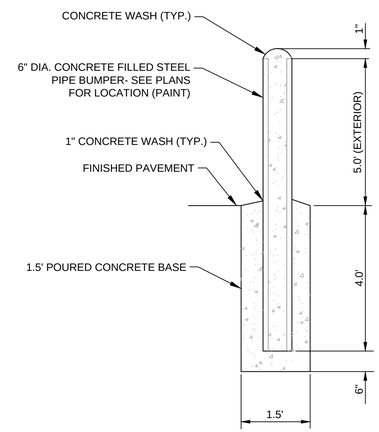

BOLLARD

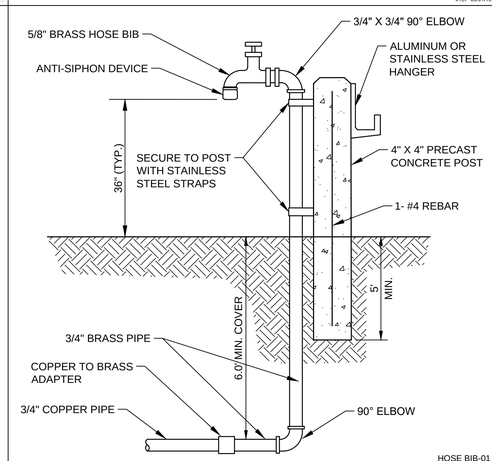

HOSE BIB-01

HOSE BIB DETAIL

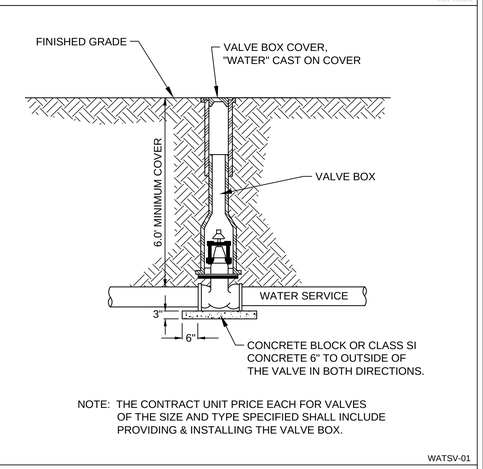

NOTE: THE CONTRACT UNIT PRICE EACH FOR VALVES OF THE SIZE AND TYPE SPECIFIED SHALL INCLUDE PROVIDING & INSTALLING THE VALVE BOX.

WATSV-01

SERVICE VALVE

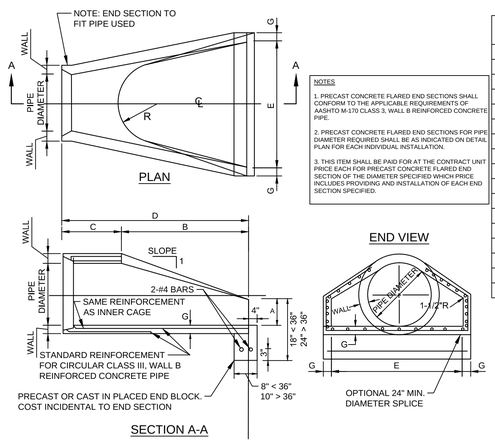

NOTES

1. PRECAST CONCRETE FLARED END SECTIONS SHALL CONFORM TO THE APPLICABLE REQUIREMENTS OF AASHTO M-170 CLASS 3, WALL B REINFORCED CONCRETE PIPE.
2. PRECAST CONCRETE FLARED END SECTIONS FOR PIPE DIAMETER REQUIRED SHALL BE AS INDICATED ON DETAIL PLAN FOR EACH INDIVIDUAL INSTALLATION.
3. THIS ITEM SHALL BE PAID FOR AT THE CONTRACT UNIT PRICE EACH FOR PRECAST CONCRETE FLARED END SECTION OF THE DIAMETER SPECIFIED WHICH PRICE INCLUDES PROVIDING AND INSTALLATION OF EACH END SECTION SPECIFIED.

PIPE DIA.	APPROX. QTY. (lbs)	WALL (in)	A (in)	B (in)	C (in)	D (in)	E (in)	G (in)	R (in)	APPROX. SLOPE
12"	530	2	4	24	4'-0 7/8"	6'-0 7/8"	24	2	9	1:2.4
15"	740	2 1/4	6	27	3'-10"	6'-1"	30	2 1/4"	11	1:2.4
18"	990	2 1/2	9	27	3'-10"	6'-1"	36	2 1/2	12	1:2.4
21"	1280	2 3/4	9	35	38	6'-1"	3'-6"	2 3/4	13	1:2.4
24"	1520	3	9 1/2	3'-7 1/2"	30	6'-1 1/2"	4'-0"	3	14	1:2.5
27"	1930	3 1/4	10 1/2	4'-0"	25 1/2	6'-1 1/2"	4'-6"	3 1/4	14 1/2	1:2.4
30"	2190	3 1/2	12	4'-6"	19 3/4	6'-1 3/4"	5'-0"	3 1/2	15	1:2.5
33"	3200	3 3/4	13 1/2	4'-10 1/2"	39 1/4	8'-1 3/4"	5'-6"	3 3/4	17 1/2	1:2.5
36"	4100	4	15	5'-3"	34 3/4	8'-1 3/4"	6'-0"	4	20	1:2.5
42"	5380	4 1/2	21	5'-3"	35	8'-2"	6'-6"	4 1/2	22	1:2.5
48"	6550	5	24	6'-0"	26	8'-2"	7'-0"	5	22	1:2.5
54"	8240	5 1/2	27	5'-5"	35	8'-4"	7'-6"	5 1/2	24	1:2.0
60"	8730	6	35	5'-0"	39	8'-3"	8'-0"	5	*	1:1.9
66"	10710	6 1/2	30	6'-0"	27	8'-3"	8'-6"	5 1/2	*	1:1.7
72"	12520	7	36	6'-6"	21	8'-3"	9'-0"	6	*	1:1.8
78"	14770	7 1/2	36	7'-6"	21	9'-3"	9'-6"	6 1/2	*	1:1.8
84"	18160	8	36	7'-6 1/2"	21	9'-3 1/2"	10'-0"	6 1/2	*	1:1.6

* RADIUS AS FURNISHED BY MANUFACTURER

NOTE: GRATES, WHERE SPECIFIED, SHALL BE PROVIDED FOR ALL PRECAST REINFORCED CONCRETE FLARED END SECTIONS.

FES-02

PRECAST REINFORCED CONCRETE FLARED END SECTION

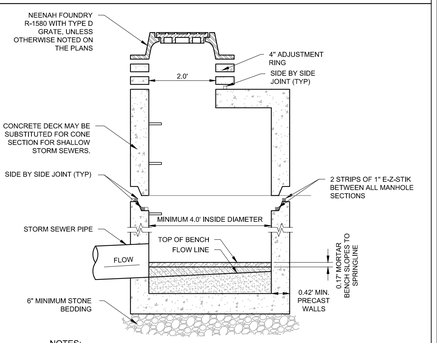

NOTES:

1. CLEAN UNDERSIDE OF ADJUSTING RING OR CAST IRON FRAME AND SET IN PLACE.
2. TUCK POINT MORTAR INTO ANNULAR CRACK AND BACKPLASTERED INSIDE AND OUTSIDE OF ALL JOINTS.
3. THE FLAT TOP MAY BE USED IN LIEU OF THE TAPERED TOP WHEN FIELD CONDITIONS PROHIBIT THE USE OF A FLAT TAPERED TOP.
4. MANHOLE CONSTRUCTION TO MEET REQUIREMENTS OF ASTM C478.
5. ECCENTRIC CONE SECTION OF MANHOLE TO BE SET OUTSIDE OF VEHICULAR WHEEL PATH NEAR ℄ OF ROADWAY.

STORM SEWER MANHOLE

#301-1503610

DRAFTED: DKT DESIGNED: DKT REVIEWED: DAT 5/15/2018 11:13 AM – Z:\Projects\2018\251.00-WI\CAD\SHEETS\CONSTRUCTION STANDARDS.dwg

PLAN | DESIGN | DELIVER
www.pinnacle-engr.com
PINNACLE ENGINEERING GROUP
ENGINEERING | NATURAL RESOURCES | SURVEYING
CHICAGO OFFICE:
1051 E. MAIN ST. | SUITE 217
EAST DUNDEE, IL 60118
(847) 551-5300
CHICAGO | MILWAUKEE : NATIONWIDE

WACKER NEUSON - GERMANTOWN STORAGE EXPANSION AREA

GERMANTOWN, WISCONSIN

REVISIONS

1	ISSUE FOR PERMIT	04/13/18	
2	PER VILLAGE REVIEW	05/10/18	

CONSTRUCTION STANDARDS

PEG JOB No. 251.00-WI
PEG PM DAT
START DATE 04/13/18
SCALE NONE

SHEET C-6 OF C-6

© COPYRIGHT 2018

CONSTRUCTION STANDARDS

THESE PLANS AND DESIGNS ARE COPYRIGHT PROTECTED AND MAY NOT BE USED IN WHOLE OR IN PART WITHOUT THE WRITTEN CONSENT OF PINNACLE ENGINEERING GROUP, LLC

LEGAL DESCRIPTION:

Lot 1 of Certified Survey Map No. 3171, as recorded in the Register of Deeds office for Washington County as Document No. 522846, being a part of the Southeast 1/4 and the Southwest 1/4 of the Northwest 1/4 of Section 21, Township 9 North, Range 20 East, Village of Germantown, Washington County, Wisconsin.

GENERAL NOTES

1. Survey prepared for: Neuson Logist Wacker
2. Field work completed on MARCH 2, 2018.
3. Easements based on Fidelity National Title Company Deed and Easement Report No. F-354253 dated March 15, 2018.
4. Existing improvements graphically shown on this survey are limited to a predefined "Project Area" specified by the Owner/Client. Pinnacle Engineering Group, LLC takes no responsibility for improvements outside of this "Project Area".
5. Flood Zone Classification: The property lies with in Zone "X" of the Flood Insurance Rate Map Community Panel No. 55131C0357D dated NOVEMBER 20, 2013. Zone "X" areas are determined to be outside the 0.2% annual chance floodplain.
6. Vertical Datum: National Geodetic Vertical Datum of 1929 (NGVD29). Contours are shown at a 1' interval based on actual ground survey of the current ground terrain. Reference Benchmark: Concrete monument with brass cap at the southeast corner of the Northwest 1/4 Section 21, Town 9 North, Range 20 East, Elevation = 871.55.
7. Underground utility locations shown are based on field location markings by Digger's Hotline ticket #20180803252 with a clear date of FEBRUARY 27, 2018. The location and size of underground structures and utilities shown hereon have been located based on a reasonable visual observation and are shown for informational purposes only. PINNACLE ENGINEERING GROUP, LLC. does not guarantee the location of utilities shown. Contact Digger's Hotline prior to the start of any activity.

LEGEND OF SYMBOLS & ABBREVIATIONS

SANITARY MANHOLE
STORM MANHOLE
STORM INLET
CLEANOUT
CATCH BASIN
LATERAL
UNKNOWN MANHOLE
WELL
HYDRANT
WATER VALVE
DOWN SPOUT
SPRINKLER VALVE
WATER SHUT OFF
STANDPIPE
WATER MANHOLE
FLOOD LIGHT
LIGHT POLE
TRAFFIC SIGNAL
UTILITY POLE
GUY WIRE
FIBER OPTIC MARKER
FIBER OPTIC MANHOLE/VAULT
TELEPHONE PEDESTAL
TELEPHONE MANHOLE/VAULT
TELEPHONE MARKER
TRANSFORMER
ELECTRIC METER/PEDESTAL
ELECTRIC MANHOLE/VAULT
CABLE TV RISER/BOX
CABLE TV MANHOLE/VAULT
GAS VALVE
GAS METER
GAS MARKER
AIR CONDITIONING UNIT
VENT
DIRECTIONAL ARROW
DUMPSTER
HANDICAP STALL
SPOT ELEVATION
POST INDICATOR VALVE
SIGN
MAIL BOX
FLAG POLE
BASKETBALL HOOP
BOLLARD
CROSS CUT
IRON PIPE
IRON REBAR/ROD
MAG NAIL
SECTION MONUMENT
BENCH MARK
CONIFER TREE
DECIDUOUS TREE
BUSH
WETLAND SYMBOL
SANITARY SEWER
STORM SEWER
WATER MAIN
FIBER OPTIC LINE
TELEPHONE LINE
ELECTRIC LINE
OVERHEAD WIRES
CABLE TELEVISION
GAS MAIN
WETLANDS
TREE LINE
NO ACCESS

CL. =CENTERLINE
CONC. =CONCRETE
EL. =ELEVATION
EXT. =EXISTING
INV. =INVERT
MON. =MONUMENT
P.O.B. =POINT OF BEGINNING
P.O.C. =POINT OF COMMENCEMENT
R.O.W =RIGHT OF WAY
SEC. =SECTION
SQ. FT. =SQUARE FEET
W/ =WITH
(R) =RECORDED AS
(D) =DEEDED AS

NORTH

GRAPHICAL SCALE (FEET)
0 1" = 50' 100'

Bearings referenced to the Wisconsin State Plane Coordinate System, South Zone (N.A.D. 1927). The east line of the Northwest 1/4 of Section 21, Township 9 North, Range 20 East has a bearing of S00°45'55"E.

I, John P. Konopacki, Professional Land Surveyor, hereby certify that this survey map is correct to the best of my knowledge and belief with the information provided and complies with requirements of Chapter A-E 7 s.35.93 of the Wisconsin State Statutes.

SIGNED
JOHN P. KONOPACKI,
PROFESSIONAL LAND SURVEYOR S-2461

WISCONSIN JOHN P. KONOPACKI S-2461 Waukesha, WI LAND SURVEYOR

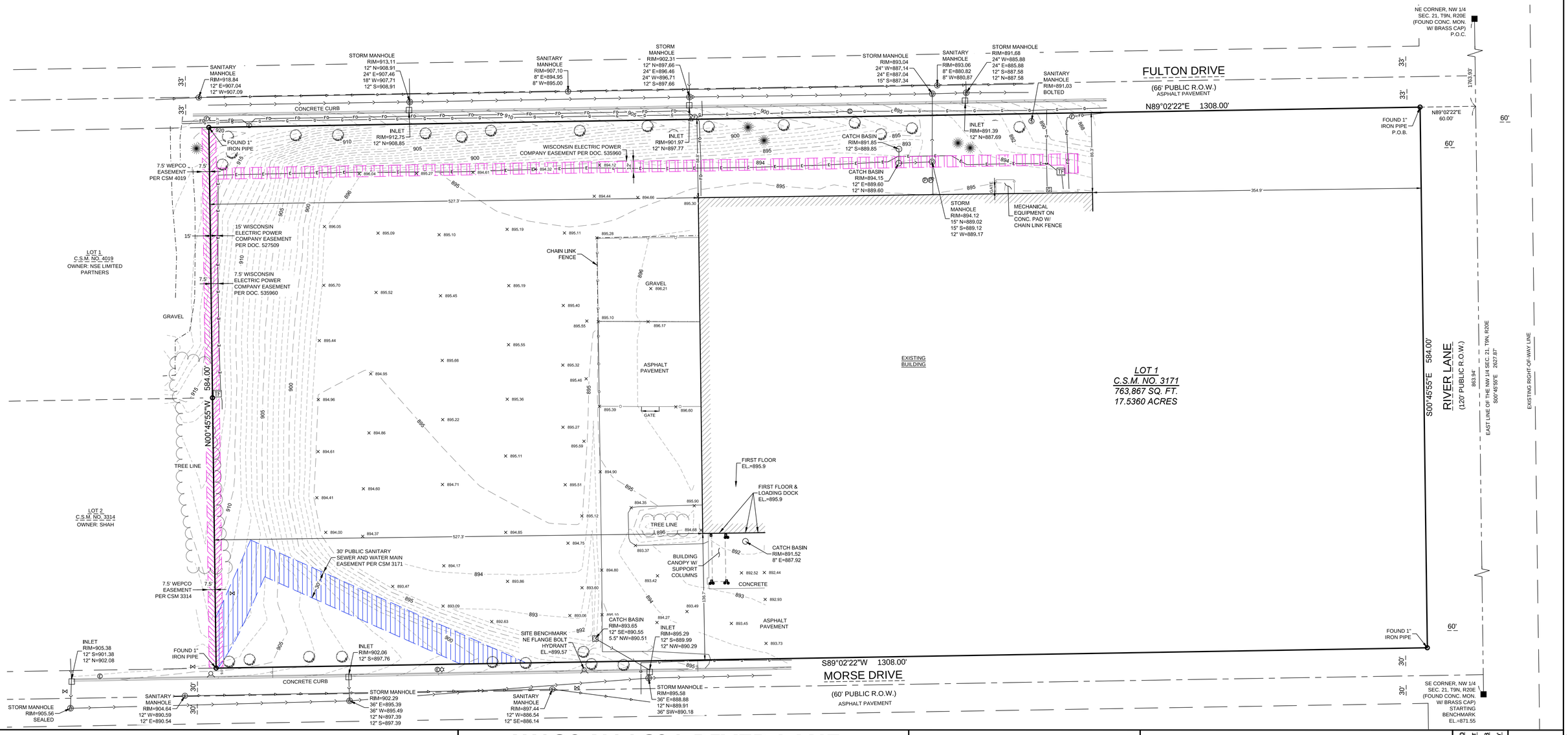

www.pinnacle-engr.com

REVIEWED: JPK
DESIGNED:
DRAFTED: ST

PLAN | DESIGN | DELIVER
www.pinnacle-engr.com
PINNACLE ENGINEERING GROUP
ENGINEERING | NATURAL RESOURCES | SURVEYING
CHICAGO | MILWAUKEE : NATIONWIDE

WISCONSIN OFFICE:
15850 W. BLUEMOUND ROAD
BROOKFIELD, WI 53005
(262) 754-8888

W180 N11691 RIVER LANE

LOT 1 OF C.S.M. NO. 3171, PART OF THE SE 1/4 AND THE SW 1/4 OF THE NW 1/4 OF SEC. 21, T9N, R20E, VILLAGE OF GERMANTOWN, WASHINGTON COUNTY, WISCONSIN

PLAT OF SURVEY

REVISIONS

1	ISSUE FOR PERMIT	04/13/18
2	PER VILLAGE REVIEW	05/10/18

PEG JOB No. 1251.00
PEG PM DAT
DATE 04/13/18
SCALE 1"=50'

SHEET 1 OF 1

SURVEY

© COPYRIGHT 2018

THESE PLANS AND DESIGNS ARE COPYRIGHT PROTECTED AND MAY NOT BE USED IN WHOLE OR IN PART WITHOUT THE WRITTEN CONSENT OF PINNACLE ENGINEERING GROUP, LLC

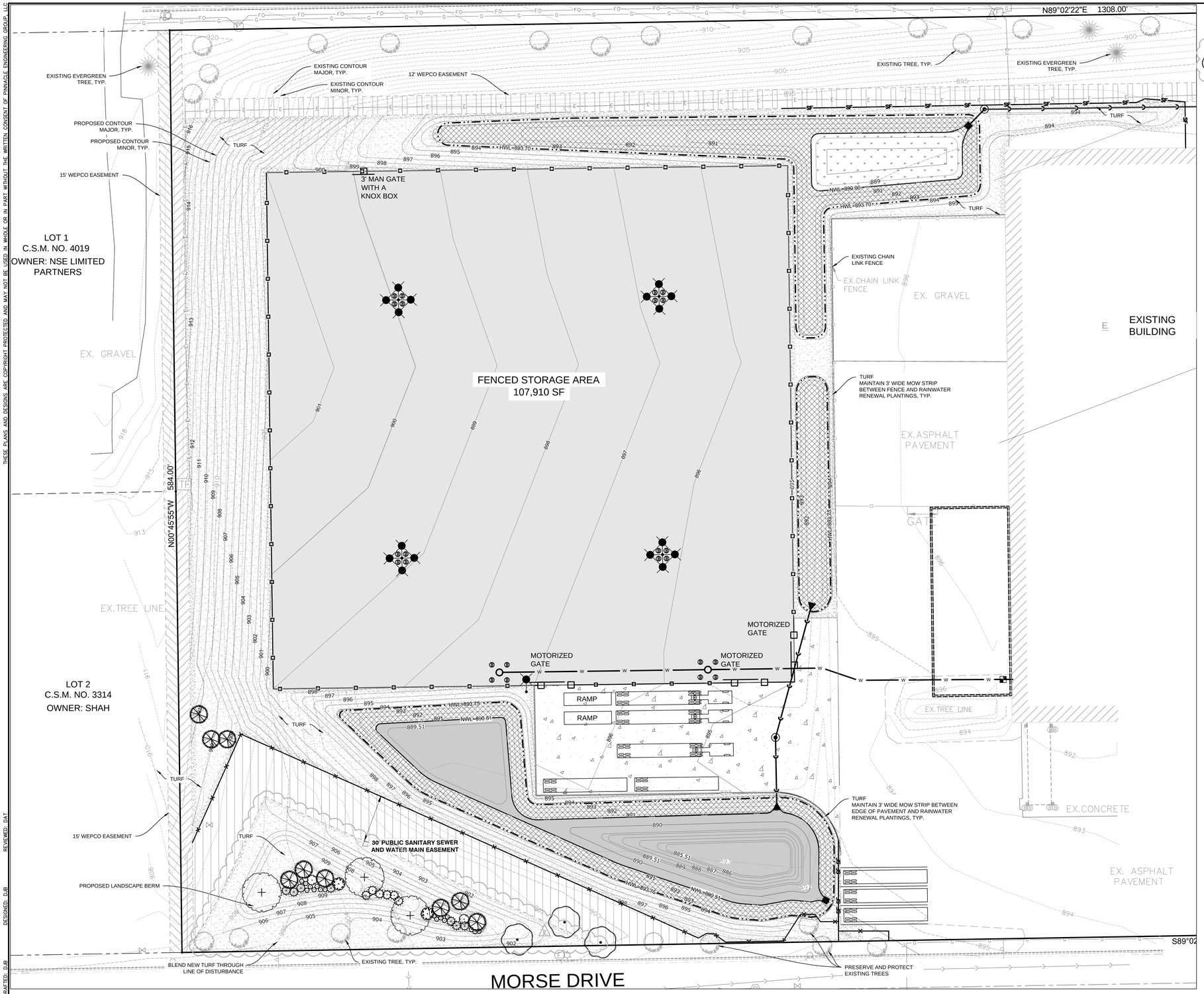

PLANT SCHEDULE

TREES	BOTANICAL NAME	COMMON NAME	SIZE	QTY
	Amelanchier x grandiflora 'Autumn Brilliance'	'Autumn Brilliance' Serviceberry	2" CAL.	3
	Crataegus viridis `Winter King`	`Winter King` Hawthorn	2" Cal.	3
	Picea glauca `Densata`	Black Hills Spruce	6` Tall	9

SHRUBS	BOTANICAL NAME	COMMON NAME	SIZE	QTY
	Ilex verticillata	Winterberry	5 gal.	2
	Juniperus chinensis `Mint Julep`	Mint Julep Juniper	2` Wide	6
	Juniperus horizontalis `Youngstown`	Creeping Juniper	2` Wide	7
	Potentilla fruticosa `McKay`s White`	McKay`s White Bush Cinquefoil	3 gal.	16
	Viburnum dentatum `Blue Muffin`	Southern Arrowwood	5 gal.	2

GROUND COVERS	BOTANICAL NAME	COMMON NAME	QTY
	RAINWATER RENEWAL MIX	AGRECOL RAINWATER RENEWAL MIX	29,477 sf

SEED	BOTANICAL NAME	COMMON NAME	QTY
	Turf Seed Drought Tolerant Dwarf Fescue Blend		55,021 sf

DETENTION BASIN PLUGS

BOTANICAL NAME	COMMON NAME	QTY.	SIZE	SPACING
Acorus calamus	Sweet Flag	146	3" Pot	18" oc
Alisma subcordatum	Water Plantain	59	3" Pot	18" oc
Carex comosa	Bottlebrush Sedge	146	3" Pot	18" oc
Carex crinita	CaterpillarSedge	59	3" Pot	18" oc
Carex hystericina	Porcupine Sedge	146	3" Pot	18" oc
Glyceria grandis	Reed Manna Grass	88	3" Pot	18" oc
Glyceria striata	Fowl Manna Grass	59	3" Pot	18" oc
Iris virginica shrevei	Shreve`s Iris	103	3" Pot	18" oc
Leersia oryzoides	Rice Cutgrass	103	3" Pot	18" oc
Sagittaria latifolia	Lance-Leafed Arrowhead	59	3" Pot	18" oc
Sparganium eurycarpum	Common Bur Reed	175	3" Pot	18" oc
Spartina pectinata	Prairie Cordgrass	321	3" Pot	18" oc

NORTH

GRAPHICAL SCALE (FEET)

0 1" = 30' 60'

www.pinnacle-engr.com

OVERALL LANDSCAPE PLAN

DRAFTED: DJB DESIGNED: DJB REVIEWED: DAT

PLAN I DESIGN I DELIVER
www.pinnacle-engr.com
PINNACLE ENGINEERING GROUP
ENGINEERING I NATURAL RESOURCES I SURVEYING
CHICAGO OFFICE:
1051 E. MAIN ST. | SUITE 217
EAST DUNDEE, IL 60118
(847) 551-5300
CHICAGO I MILWAUKEE I NATIONWIDE

WACKER NEUSON - GERMANTOWN STORAGE EXPANSION AREA

GERMANTOWN, WISCONSIN

REVISIONS

1	ISSUE FOR PERMIT	04/13/18
2	PER VILLAGE REVIEW	05/10/18

OVERALL LANDSCAPE PLAN

PEG JOB No. 251.00-W1
PEG PM DAT
START DATE 04/13/18
SCALE 1"=30'

SHEET LA-1 OF LA-3

© COPYRIGHT 2018

THESE PLANS AND DESIGNS ARE COPYRIGHT PROTECTED AND MAY NOT BE USED IN WHOLE OR IN PART WITHOUT THE WRITTEN CONSENT OF PINNACLE ENGINEERING GROUP, LLC

GENERAL PLANTING NOTES

1. THE LAYOUT OF ALL PLANTING BEDS AND INDIVIDUAL TREES AND SHRUBS SHALL BE STAKED BY THE CONTRACTOR IN ADVANCE OF INSTALLATION. FLAGGING, STAKES, OR PAINT MAY BE USED TO DELINEATE LOCATIONS AS SCALED FROM THE PLANS. AN APPROVED REPRESENTATIVE WILL REVIEW THESE LOCATIONS WITH THE CONTRACTOR AND MAKE MINOR ADJUSTMENTS AS NECESSARY.
2. THE CONTRACTOR IS RESPONSIBLE FOR INDEPENDENTLY DETERMINING THE PLANT MATERIAL QUANTITIES REQUIRED BY THE LANDSCAPE PLANS. REPORT ANY DISCREPANCIES TO THE LANDSCAPE ARCHITECT.
3. ALL PLANT MATERIAL SHALL COMPLY WITH STANDARDS DESCRIBED IN AMERICAN STANDARD OF NURSERY STOCK - Z60.1 ANSI. LANDSCAPE ARCHITECT OR OWNERS AUTHORIZED REPRESENTATIVE RESERVES THE RIGHT TO INSPECT AND POTENTIALLY REJECT ANY PLANT MATERIAL DEEMED TO NOT MEET THE REQUIRED STANDARDS.
4. NO PLANT MATERIAL OR PLANT SIZE SUBSTITUTIONS WILL BE ACCEPTED UNLESS APPROVAL BY THE LANDSCAPE ARCHITECT. ANY CHANGES SHALL BE SUBMITTED TO THE LANDSCAPE ARCHITECT IN WRITING PRIOR TO INSTALLATION.
5. ALL PLANT MATERIAL AND SEED SHALL BE PROVIDED FROM A NURSERY (WITHIN 200 MILES) WITH A SIMILAR PLANT HARDINESS ZONE AS PROJECT LOCATION. EXISTING SOIL SHALL BE AMENDED PER SOIL ANALYSIS REPORT TO ENSURE A PROPER GROWING MEDIUM IS ACHIEVED.
6. ALL PLANT MATERIAL SHALL BE INSTALLED IN ACCORDANCE WITH PLANTING DETAILS.
7. WHILE PLANTING TREES AND SHRUBS, BACKFILL $\frac{2}{3}$ OF PLANTING HOLE AND WATER TREE THOROUGHLY BEFORE INSTALLING THE REMAINDER OF SOIL MIXTURE. AFTER ALL SOIL HAS BEEN PLACED INTO THE PLANTING HOLE WATER THOROUGHLY AGAIN.
8. CONTRACTOR MUST LABEL ALL TREES WITH THE COMMON AND BOTANICAL NAMES PRIOR TO FINAL INSPECTION.
9. ALL PLANTING BEDS SHALL BE MULCHED WITH 3" DEEP SHREDDED HARDWOOD MULCH, AND ALL TREES PLANTED IN TURF AREAS SHALL RECEIVE A 3" DEEP SHREDDED HARDWOOD MULCHED RING AS SHOWN IN PLANTING DETAILS.
10. CONTRACTOR SHALL ENSURE THAT SOIL CONDITIONS AND COMPACTION ARE ADEQUATE TO ALLOW FOR PROPER DRAINAGE AROUND THE CONSTRUCTION SITE. UNDESIRABLE CONDITIONS SHALL BE BROUGHT TO THE ATTENTION OF THE LANDSCAPE ARCHITECT PRIOR TO BEGINNING OF WORK. IT SHALL BE THE CONTRACTOR'S RESPONSIBILITY TO ENSURE PROPER SURFACE AND SUBSURFACE DRAINAGE IN ALL AREAS
11. ALL TURF SEED AREAS SHALL RECEIVE A MINIMUM OF 4" DEPTH OF TOPSOIL. WITH APPROVAL, EXISTING SOIL MAY BE UTILIZED PROVIDED THE PROPER SOIL AMENDMENTS ARE TILLED THOROUGHLY INTO THE TOP 6" OF SOIL AS INDICATED IN THE SOIL PLACEMENT NOTES. REQUIRED AMENDMENTS SHALL BE DETERMINED BASED ON A SOIL ANALYSIS TO BE PERFORMED. ALL TOPSOIL AMENDMENT SHALL BE AGED WEED FREE MANURE OR CLASS 1 ORGANIC MATTER.
12. ALL PLANTING BEDS AND TREE RINGS SHALL HAVE A 4" DEEP TRENCHED BED EDGE CREATED BY EITHER A FLAT LANDSCAPE SPADE OR MECHANICAL EDGER. BED EDGES ARE TO BE CUT CLEAN AND SMOOTH AS SHOWN ON LANDSCAPE PLANS WITH A CLEAN DEFINITION BETWEEN TURF AND PLANTING AREAS.
13. FOR LAWN SEEDING, APPLY A STARTER FERTILIZER AND SEED UNIFORMLY AT THE RATE RECOMMENDED BY MANUFACTURER, AND PROVIDE A MULCH COVERING THAT IS SUITABLE TO PROMOTE SEED GERMINATION AND TURF ESTABLISHMENT. CONTRACTOR TO PROVIDE FERTILIZER, SEED, AND MULCH SPECIFICATIONS TO THE LANDSCAPE ARCHITECT FOR APPROVAL PRIOR TO INSTALLATION. EROSION CONTROL MEASURES ARE TO BE INSTALLED IN THOSE AREAS REQUIRING STABILIZATION (SWALES, SLOPES EXCEEDING 1:3, AND THOSE LOCATIONS INDICATED IN CIVIL DRAWINGS).
14. IN AREAS WHERE NEWLY SEEDED AREAS ABUT AREAS OF ESTABLISHED TURF, SEEDED AREAS SHALL BE BLENDED INTO EXISTING TO PROVIDE A CONSISTENT AND UNIFORM TURF.
15. CONTRACTOR TO ENSURE A SMOOTH, UNIFORM QUALITY TURF IS ACHIEVED WITH NO BARE SPOTS LARGER THAN 6" X 6". ANY BARE SPOTS LARGER THAN 6" X6" AT THE END OF ESTABLISHMENT PERIOD SHALL BE RESEEDED AT THE CONTRACTORS EXPENSE TO OBTAIN A DENSE, UNIFORM LAWN.
16. ALL PLANTING BEDS SHALL HAVE A MINIMUM 10" DEPTH OF PREPARED SOIL. WITH APPROVAL, EXISTING SOIL MAY BE UTILIZED PROVIDED THE PROPER SOIL AMENDMENTS ARE TILLED THOROUGHLY INTO THE TOP 10" OF SOIL. REFER TO SOIL PLACEMENT NOTES.
17. ALL FINISH GRADING AND LAWN AREAS TO BE INSTALLED BY LANDSCAPE CONTRACTOR.
18. ALL DISTURBED AREAS WITHIN THE PROJECT SHALL BE RESTORED TO ORIGINAL OR BETTER CONDITION.
19. ALL DISTURBED AREAS OUTSIDE THE LIMITS OF WORK SHALL BE RESTORED TO ORIGINAL OR BETTER CONDITION AT NO ADDITIONAL COST TO THE OWNER.
20. THE CONTRACTOR SHALL VERIFY ALL EXISTING UTILITIES, INCLUDING ANY IRRIGATION LINES, PRIOR TO DIGGING. CONSULT DIGGERS HOTLINE.
21. THE CONTRACTOR IS RESPONSIBLE FOR ALL PERMITS, FEES, AND LICENSES NECESSARY FOR THE INSTALLATION OF THIS PLAN.
22. THE CONTRACTOR IS TO REVIEW ALL SITE ENGINEERING DOCUMENTS PRIOR TO INSTALLATION. ANY CONFLICTS MUST BE REPORTED TO THE LANDSCAPE ARCHITECT. THESE LANDSCAPE DRAWINGS ARE FOR THE INSTALLATION OF PLANT MATERIALS ONLY UNLESS OTHERWISE STATED.
23. THE CONTRACTOR SHALL PROVIDE WATERING AND MAINTENANCE SERVICES FOR A PERIOD OF 60 DAYS TO ENSURE VEGETATIVE ESTABLISHMENT. UPON COMPLETION OF THE PROJECT, CONTRACTOR SHALL SUPPLY THE OWNER WITH ONGOING WATERING AND MAINTENANCE INSTRUCTIONS.
24. PLANT MATERIALS SHALL BE GUARANTEED FOR A PERIOD OF ONE (1) YEAR FROM TIME OF OWNER ACCEPTANCE. ONLY ONE REPLACEMENT PER PLANT WILL BE REQUIRED DURING THE WARRANTY PERIOD EXCEPT IN THE EVENT OF FAILURE TO COMPLY WITH THE SPECIFIED REQUIREMENTS.
25. CONTRACTOR IS RESPONSIBLE TO CONDUCT A FINAL WALK THROUGH WITH THE LANDSCAPE ARCHITECT AND OR OWNERS REPRESENTATIVE TO ANSWER QUESTIONS, PROVIDE INSTRUCTIONS, AND ENSURE THAT PROJECT REQUIREMENTS HAVE BEEN MET.
26. EXISTING TREES TO BE PROTECTED SHALL HAVE PROTECTIVE FENCING INSTALLED AS SHOWN IN DETAIL 7/LA-3. IF GRADING WORK WILL TAKE PLACE WITHIN THE DRIPLINE OF THE TREE, REFER TO DETAIL 8/LA-3 AND INSTALL PROTECTIVE FENCING AT THE DETERMINED LOCATION OF ROOT PRUNING.

SOIL PLACEMENT NOTES

1. LOOSEN SUBGRADE TO A MINIMUM DEPTH INDICATED IN PLANTING NOTES USING A CULTI-MULCHER OR SIMILAR EQUIPMENT, AND REMOVE STONES MEASURING OVER 1-1/2 INCHES IN ANY DIMENSION, STICKS, RUBBISH AND OTHER EXTRANEOUS MATTER.
2. THOROUGHLY BLEND PLANTING SOIL MIX FOR PLANTING BED AREAS. (1 PART EXISTING SOIL, 1 PART TOPSOIL, 1 PART ORGANIC SOIL AMENDMENT, 2.9 POUNDS PER CUBIC YARD OF 4-4-4 ANALYSIS SLOW-RELEASE FERTILIZER)
3. TREE AND SHRUB HOLES SHALL BE FILLED WITH A PREPARED PLANTING MIXTURE OF 1 PART TOPSOIL, 2 PARTS PLANTING SOIL MIX.
4. SPREAD SOIL AND SOIL AMENDMENTS TO DEPTH INDICATED ON DRAWINGS, BUT NOT LESS THAN REQUIRED TO MEET FINISH GRADES AFTER NATURAL SETTLEMENT. (FINISH GRADE OF PLANTING BEDS SHALL BE 3" BELOW ALL ADJACENT SURFACES. FINISH GRADE OF TURF SEEDING AREAS SHALL BE 1" BELOW ALL ADJACENT HARD SURFACES, WALKS, AND CURBS.)
5. PLACE APPROXIMATELY 1/2 OF TOTAL AMOUNT OF SOIL REQUIRED. WORK INTO TOP OF LOOSENED SUBGRADE TO CREATE A TRANSITION LAYER, THEN PLACE REMAINDER OF THE SOIL. SOIL TRANSITION LAYER SHALL BE TILLED TO A MINIMUM DEPTH OF 6" BELOW THE DEPTH OF NEWLY PLACED SOIL.
6. DO NOT SPREAD IF PLANTING SOIL OR SUBGRADE IS FROZEN, MUDDY, OR EXCESSIVELY WET.
7. FINISH GRADING: GRADE SOIL TO A SMOOTH, UNIFORM SURFACE PLANE WITH A LOOSE, UNIFORMLY FINE TEXTURE.
8. ROLL AND RAKE, REMOVE RIDGES, AND FILL DEPRESSIONS TO MEET FINISH GRADES.
9. RESTORE PLANTING BEDS IF ERODED OR OTHERWISE DISTURBED AFTER FINISH GRADING AND BEFORE PLANTING.

Specifications for Hand Broadcasting Rainwater Renewal Mix:

Seeding shall be conducted in late fall (September 1- Soil Freeze) so that seeds may lie dormant during the winter, allowing for stratification, or spring (March 1-June 1) to allow a complete growing season to become established.

A. Preparation of Soil Prior to Seeding

1. Prepare soil as specified for the construction of detention basin.
2. All foreign materials larger than 1-inch shall be removed from the soil prior to seeding or planting.
3. Area should be free from unsightly variations, ridges, and depressions.
4. Avoid driving over the specified area with machinery.

B. Cover Crop

1. Annual rye shall be spread at a density of 20 pounds per acre during the planting or seeding of the native plant species to stabilize the soil and reduce the growth of unwanted vegetation. This annual grass grows rapidly without competing with the wildflowers and grasses that are planted in the target areas.
2. Winter wheat or perennial rye shall not be used as a cover crop. These grasses may out compete prairie seedlings, leading to a reduction in the success of the plantings.
3. All seeding shall be covered with 1-inch of clean, non-invasive straw (no marsh hay, or reed canary grass) without seeds, within seven days. Wheat, rye, oats, or barley are acceptable forms of straw. Those areas of slopes steeper than 8:1 (eight feet horizontal to one foot vertical) shall be planted no later than October 1 and staked with an erosion control blanket to prevent erosion.

C. Seed Mix

Mix all prairie seed with vermiculite according to Agrecol recommendations.

1. Broadcast half the seed over the entire site or target area.
2. Broadcast the other half of seed perpendicular to the direction that the first half of the seed was broadcast.
3. Cover seed with ¼ -inch to ½ -inch of soil (use any excess soil from the site) with rake or drag.
4. Roll site to ensure firm seed-to-ground contact.
5. Keep seed constantly wet through germination period. Generally 3 weeks.

All seeding shall be covered with 1-inch of clean, non-invasive straw (no marsh hay, or reed canary grass) without seeds, within seven days. Wheat, rye, oats, or barley are acceptable forms of straw. Those areas of slopes steeper than 8:1 (eight feet horizontal to one foot vertical) shall be planted no later than October 1 and staked with an erosion control blanket to prevent erosion.

Native Plugs Installation (3" POTS)

Installation of plugs should occur on a cloudy, cool day in either the morning or afternoon. Planting should also occur as early in the season as possible once the risk of freezing has passed. Install plants species in a minimum grouping size of 15. Plant species with greater quantities shall be installed in larger groups. Each plant species should be distributed throughout all the basins to provide a unified look throughout the site. Plant groupings shall be planted as to blend into each other to provide a natural look without straight lines defined between groupings.

A. Preparation of Soil Prior to Planting

1. Prepare soil as specified for construction of the detention basin
2. All foreign materials larger than 1-inch shall be removed from the soil prior to seeding or planting.
3. Area should be free from unsightly variations, ridges, and depressions.
4. Avoid driving over the specified area with machinery.

B. Native Plug Installation

1. Dig a hole in your freshly worked soil about twice the diameter and the same height of the root ball of the plant. Put the soil aside to fill the hole back in later. Gently remove the plant from its container, and brush your hand over the root ball to stimulate the roots.
2. Place the plant in the hole. Place the roots at the proper level so that the plants roots aren't exposed and the foliage of low-lying plants doesn't get too wet. Fill the hole about half-way with the original soil. Gently pack the soil to remove any trapped air. Water plant thoroughly.
3. Finish filling in with soil around the plant, gently pack, and water thoroughly again.
4. Cover the base of the plant with 1" of straw mulch.
5. After planting, keep your plants well watered for the first year until they establish a good root system.

Weed Suppression Measures:

First Year - Perform spot spray with herbicide to suppress weeds. This should occur approximately every month of the growing season after infiltration basins have been rough graded.

Second Year - In May/June mow basins at 6-inch height to suppress weeds. Perform spot spray with herbicide to suppress weeds. Have qualified professional assess plantings. Repeat mowing basins and spot-spray in early July.

Third Year - In May/June mow basins at 6-inch height to suppress weeds. Perform spot spray with herbicide to suppress weeds.

Fourth Year - In May perform a prescribed burn. In June have qualified professional assess plantings.

DETENTION BASIN SEEDING MIX:

Establishment of a viable vegetation community within the Detention Basins will be completed by hand-broadcasting of pre-designed seed mixes. The specified mixes should include most of the following plant species:

Detention Basins - Agrecol "Rainwater Renewal" Mix or Equivalent

COMMON NAME	LATIN NAME
WILDFLOWERS	
Sweet Flag	Acorus calamus
Water Plantain	Alisma subcordatum
Meadow Anemone	Anemone canadensis
Great Angelica	Angelica atropurpurea
Red Milkweed	Asclepias incarnate
Swamp Aster	Aster puniceus
New England	Asteraster novae-angliae
Beggar's Ticks	Bidens frondosa
Spotted Joe Pye Weed	Eupatorium maculatum
Boneset	Eupatorium perfoliatum
Sneezeweed	Helenium autumnale
Tall St. John's Wort	Hypericum pyramidatum
Blue Flag Iris	Iris virginica
Marsh Blazing Star	Liatris spicata
Cardinal Flower	Lobelia cardinalis
Great Blue	LobeliaLobelia siphilitica
Water Horehound	Lycopus americanus
Glade mallow	Napaea dioica
Ditch Stonecrop	Penthorum sedoides
Mountain Mint	Pycnanthemum virginianum
Wild Golden Glow	Rudbeckia laciniata
Arrowhead	Sagittaria latifolia
Cupplant	Silphium perfoliatum
Grass-Leaved Goldenrod	Solidago graminifolia
Ohio Goldenrod*	Solidago ohioensis
Riddell's Goldenrod	Solidago riddelli
Giant Bur-reed	Sparganium eurycarpum
Blue Vervain	Verbena hastata
Ironweed	Vernonia fasciculate
LEGUMES	
Wild Senna	Cassia hebecarpa

COMMON NAME	LATIN NAME
SEDGES	
Bebb's Sedge	Carex bebbii
Bristly Sedge	Carex comosa
Fringed Sedge	Carex crinita
Bottlebrush Sedge	Carex hystericina
Lake Sedge	Carex lacustris
Running Marsh Sedge	Carex sartwellii
Woodland Sedge	Carex sprengellii
Fox Sedge	Carex stipata
Tussock Sedge	Carex stricta
Brown Fox Sedge	Carex vulpinoidea
Dudley's Rush	Juncus dudleyi
Path Rush	Juncus tenuis
Torrey's Rush	Juncus torreyi
Hard-Stem Bulrush	Scirpus acutus
Dark Green Bulrush	Scirpus atrovirens
Wool Grass	Scirpus cyperinus
Soft-Stem Bulrush	Scirpus validus
GRASSES	
Big Bluestem	Andropogon gerardi
Fringed Brome	Bromus ciliatus
Canada Blue Joint Grass	Calamagrostis canadensis
Wood Reed Grass	Cinna arundinacea
Riverbank Wild Rye	Elymus riparius
Virginia Wild Rye	Elymus virginicus
Rattlesnake Grass	Glyceria Canadensis
Giant Mana Grass	Glyceria grandis
Fowl Mana Grass	Glyceria striata
Rice Cut Grass	Leersia oryzoides
Switch Grass	Panicum virgatum
Prairie Cord Grass	Spartina pectinata

www.pinnacle-engr.com

DRAFTED: DJB DESIGNED: DJB REVIEWED: DAT

PLAN I DESIGN I DELIVER
www.pinnacle-engr.com
PINNACLE ENGINEERING GROUP
ENGINEERING I NATURAL RESOURCES I SURVEYING
CHICAGO OFFICE:
1051 E. MAIN ST. | SUITE 217
EAST DUNDEE, IL 60118
(847) 551-5300
CHICAGO I MILWAUKEE I NATIONWIDE

WACKER NEUSON - GERMANTOWN STORAGE EXPANSION AREA
GERMANTOWN, WISCONSIN

REVISIONS

1	ISSUE FOR PERMIT	04/13/18	
2	PER VILLAGE REVIEW	05/10/18	

LANDSCAPE NOTES

PEG JOB No. 251.00-W1
PEG PM DAT
START DATE 04/13/18
SCALE

SHEET LA-2 OF LA-3

©COPYRIGHT 2018

LANDSCAPE NOTES

THESE PLANS AND DESIGNS ARE COPYRIGHT PROTECTED AND MAY NOT BE USED IN WHOLE OR IN PART WITHOUT THE WRITTEN CONSENT OF PINNACLE ENGINEERING GROUP, LLC

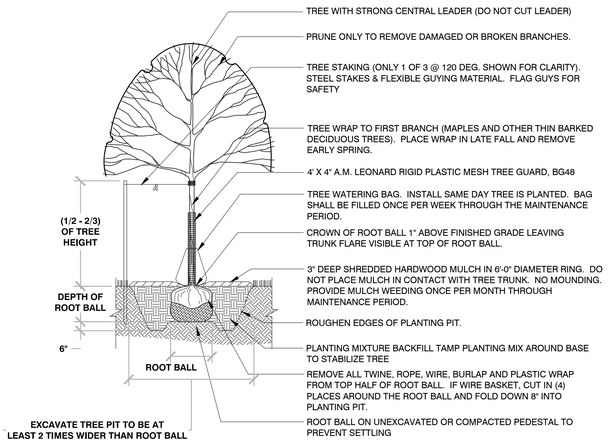

1 TREE PLANTING

1/4" = 1'-0" 329343-01

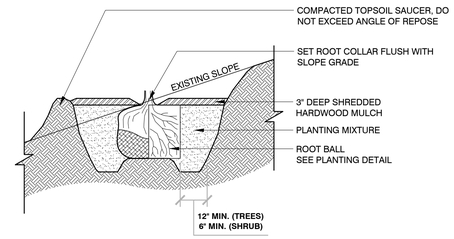

2 TREE PLANTING ON SLOPE

3/8" = 1'-0" 329343-02

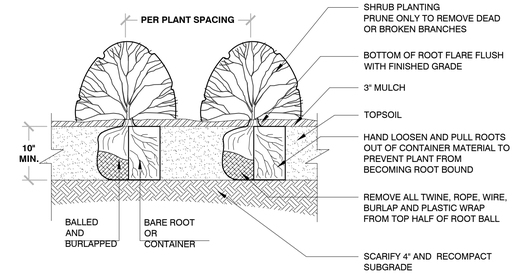

BAREROOT PLANTING NOTES:

1. SOAK ROOTS IN WATER FOR AT LEAST ONE HOUR BUT NOT MORE THAN 24 HOURS PRIOR TO PLANTING.
2. SCARIFY SIDES AND BOTTOMS OF HOLE.
3. PROCEED WITH CORRECTIVE PRUNING OF THE TOP AND BOTTOM ROOTS.
4. TRANSFER PLANT DIRECTLY FROM WATER TO HOLE. SET PLANT SO THE ROOT FLARE IS APPROXIMATELY AT THE FINISHED SOIL ELEVATION. SPREAD ROOTS OUT EVENLY. PLUMB AND IMMEDIATELY BACKFILL WITH PLANTING SOIL MIX.
5. WATER THOROUGHLY WITHIN 2 HOURS TO SETTLE PLANTS AND FILL VOIDS.
6. BACKFILL VOIDS AND WATER SECOND TIME.
7. PLACE MULCH WITHIN 48 HOURS OF THE SECOND WATERING UNLESS SOIL MOISTURE IS EXCESSIVE.

3 SHRUB PLANTING

1/2" = 1'-0" 329333-02

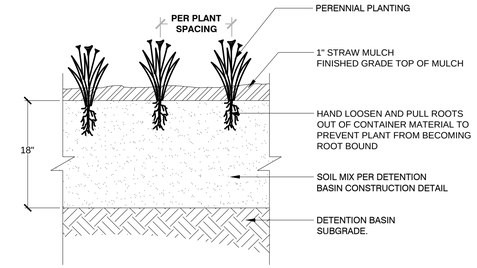

4 PERENNIAL PLANTING

1" = 1'-0" P-WA-01

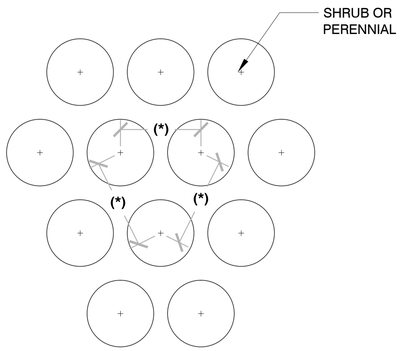

(*) = SPECIFIED PLANT SPACING PER PLANTING LIST

5 PLANT SPACING

3/4" = 1'-0" 3293-02

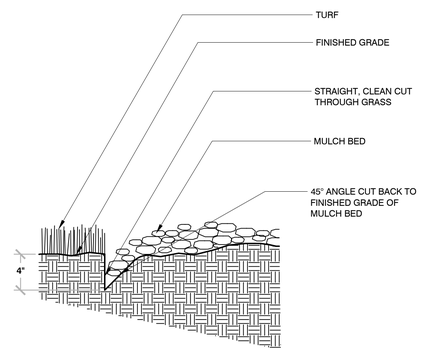

6 TRENCHED BED EDGE

3/4" = 1'-0" 3293-03

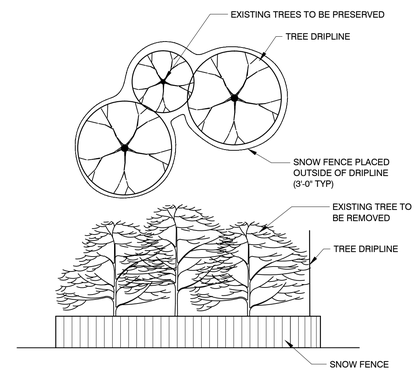

7 TREE PROTECTION

1 1/2" = 1'-0" 3293-05

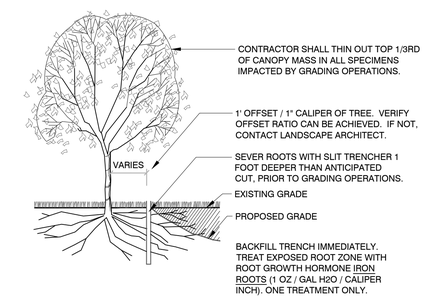

8 TREE ROOT PRUNING

1/8" = 1'-0" 3293-04

PLAN I DESIGN I DELIVER
www.pinnacle-engr.com
PINNACLE ENGINEERING GROUP
ENGINEERING I NATURAL RESOURCES I SURVEYING
CHICAGO OFFICE:
1051 E. MAIN ST. | SUITE 217
EAST DUNDEE, IL 60118
(847) 551-5300
CHICAGO I MILWAUKEE : NATIONWIDE

WACKER NEUSON - GERMANTOWN STORAGE EXPANSION AREA

GERMANTOWN, WISCONSIN

REVISIONS

1	ISSUE FOR PERMIT	04/13/18
2	PER VILLAGE REVIEW	05/10/18

PLANTING DETAILS

PEG JOB No. 125.00-W1
PEG PM DAT
START DATE 04/13/18
SCALE

SHEET LA-3 OF LA-3

© COPYRIGHT 2018

PLANTING DETAILS

www.pinnacle-engr.com

DRAFTED: DJB DESIGNED: DJB REVIEWED: DAT

Schedule

Symbol	Label	Quantity	Manufacturer	Catalog Number	Description	Lamp	Number Lamps	Filename	Lumens Per Lamp	Light Loss Factor	Wattage
	OA (2)	1	EATON - LUMARK (FORMER COOPER LIGHTING)	PFPRV-2-A40-T4-20	PREVAIL AREA AND ROADWAY LUMINAIRE (2) 70 CRI, 4000K LEDS AND TYPE IV OPTICS, BRONZE PAINTED FINISH		2	PRV-A40-D-UNV-T4-BZ.ies	7580	1	286
	OA (4)	4	EATON - LUMARK (FORMER COOPER LIGHTING)	PFPRV-4-A40-T4-20	PREVAIL AREA AND ROADWAY LUMINAIRE (2) 70 CRI, 4000K LEDS AND TYPE IV OPTICS, BRONZE PAINTED FINISH		2	PRV-A40-D-UNV-T4-BZ.ies	7580	1	572

Statistics

Description	Symbol	Avg	Max	Min	Max/Min	Avg/Min
Calc Zone #1	+	2.0 fc	11.6 fc	0.1 fc	116.0:1	20.0:1

Note

Fixture Mounting Height = 23' AFG
(Pole 20' + Base 3')

FC Measured at 0' AFG

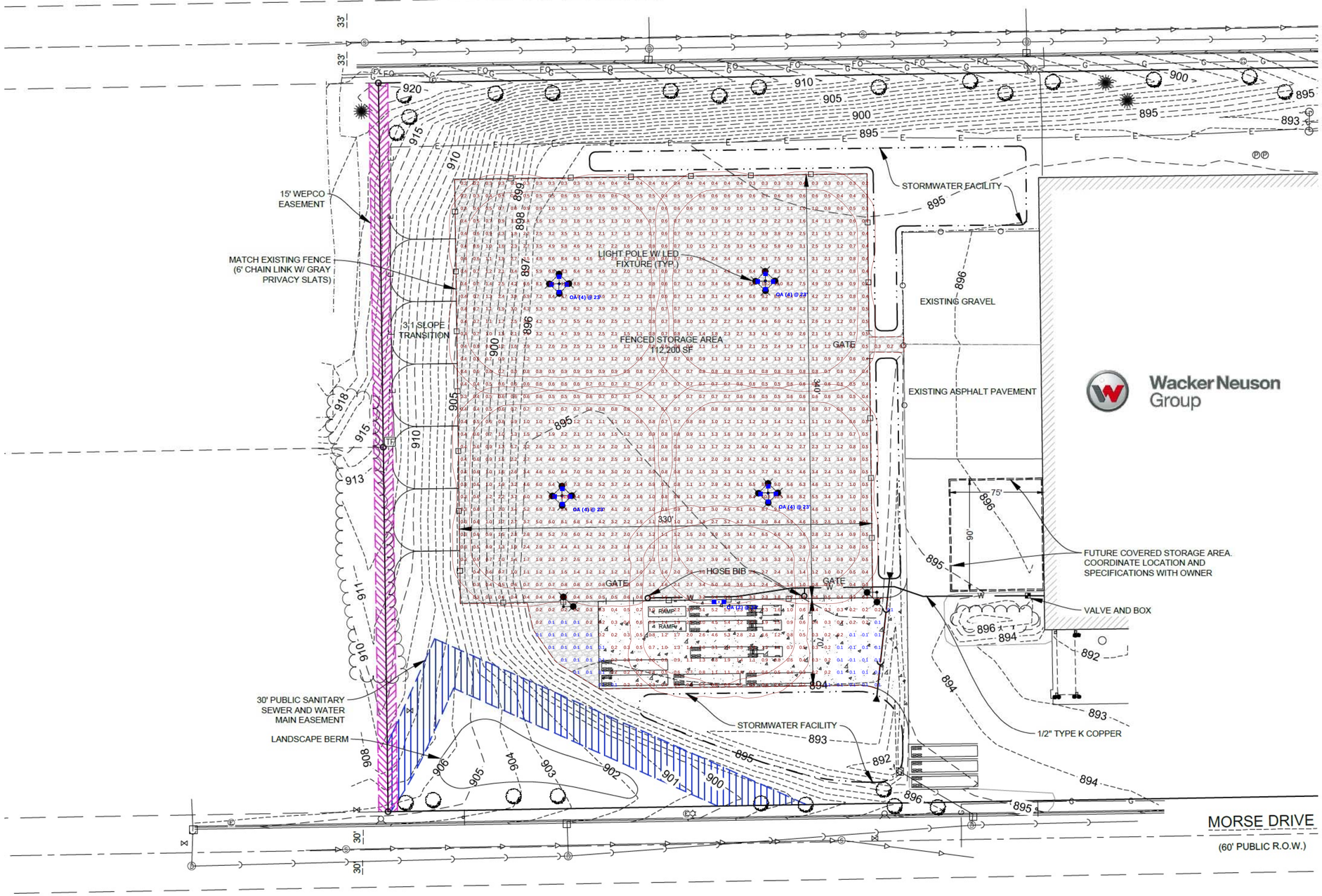

Plan View
Scale - 1" = 40ft

Wacker Neuson Group

WACKER - NEUSEN PROJECT - GERMANTOWN, WI - SITE REV2

ADAMSELECTRIC
POWERFUL SOLUTIONS
506 Nelson Lane
Hartford, WI 53027
PH: 262-673-5505 FAX: 262-673-5508

Designer
TDL
Date
5/10/2018
Scale
Not to Scale
Drawing No.

Summary

SHEET
PH-1

Document Number

DECLARATION OF COVENANT FOR STORM WATER MANAGEMENT FACILITY MAINTENANCE

THIS DECLARATION OF COVENANT FOR STORM WATER MANAGEMENT FACILITY MAINTENANCE and related covenants is declared and made this May day of 14th, 2018 by Wacker Neuson Logistics America, LLC ("Developer").

WHEREAS, Wacker Nueson Logistics America, LLC as Developer owns the real property described below on Exhibit A attached hereto and incorporated herein by reference (the "Property"); and

WHEREAS, Developer has developed the Property; and

WHEREAS, pursuant to subdivision and/or other applicable approvals, including permit approvals granted by the Village of Germantown, and in accordance with and obedience to conditions of such approvals and the applicable code provisions and Village policies governing storm water management facilities, and in order to insure that the storm water facilities constructed on and serving the Property continue to function according to the design and performance standards which they were constructed to meet, in perpetuity, Developer, for the benefit of itself, its successors in interest and the Property in perpetuity, hereby declares the following covenants, conditions and restrictions relating to the installation and maintenance of the storm water facilities on the subject Property.

Village Clerk
Village of Germantown
N112 W1701 Mequon Rd
P.O. Box 337
Germantown, WI 53022

WHEREAS, This Agreement includes the following exhibits:

_____GTNV_212-988_____
Parcel Identification Number(s) – (PIN)

Exhibit A: Legal Description of the real estate which this Agreement applies ("Property").

Exhibit B: Location Map(s) – shows an accurate location of each storm water management facility affected by this Agreement.

Exhibit C: Minimum Maintenance Requirements – prescribes those activities that must be carried out to maintain compliance with this Agreement.

Through this Declaration Developer hereby subjects the Property to the following covenants, conditions and restrictions:

1. Developer and its assigns and successors in interest ("Responsible Party") shall be responsible for the routine and extraordinary maintenance of the storm water management facilities identified in Exhibit B, and shall maintain the storm water management facilities and drainage easements in accordance with Exhibit C.
2. The Village of Germantown, or its designee, is authorized to access the Property as necessary to conduct inspections of the storm water management facilities and drainage easements to ascertain compliance with this Agreement and the minimum storm water management practice maintenance requirements prescribed in Exhibit C.
3. Upon notification to the Responsible Party by the Village of Germantown of maintenance deficiencies which require correction, the specified corrective actions shall be performed by the Responsible Party within a reasonable time frame, as shall be prescribed by the Village Engineer, which shall be no less than thirty (30) calendar days.
4. The Village of Germantown is authorized to perform the corrective actions identified in its inspection report or its notice if the Responsible Party does

not make the required corrections within the time period prescribed by the Village Engineer for corrective action. The costs and expenses of such corrective actions shall, in accordance with Section 66.0627 of the Wisconsin Statues, shall be invoiced to the Responsible Party and if not paid within the time determined by the Village Board, shall be entered on the tax roll as a special charge against the Property, and collected with any other taxes levied thereon for the year in which the work is completed.

5. This Declaration shall run with the Property and be binding upon the Developer and its successors and assigns. This Declaration may not be amended or abrogated in part or whole, without the express written consent of the Village of Germantown.

Dated this May day of 14th, 2018.

Owner:

_____
(Owners Signature)

Kris Zehren (Director of North American Logistics)
(Owners Typed Name)

Acknowledgements

State of Wisconsin) :ss
County of Washington)

Personally came before me this ____ day of _____, 200_, the above named Scott Bence to me known to be the person who executed the foregoing instrument and acknowledged the same.

_____.
[Name]
Notary Public, Washington County, WI
My commission expires:_____.

This document was drafted by:

Dwight Trostle

15850 W Bluemound Rd Brookfield, WI 53005

Exhibit A – Legal Description

The following description and reduced copy map identifies the land parcel(s) affected by this Declaration. For a larger scale view of the referenced document, contact the Washington County Register of Deeds office.

LEGAL DESCRIPTION:

Lot 1 of Certified Survey Map No. 3171, as recorded in the Register of Deeds office for Washington County as Document No. 522846, being a part of the Southeast 1/4 and the Southwest 1/4 of the Northwest 1/4 of Section 21, Township 9 North, Range 20 East, Village of Germantown, Washington County, Wisconsin.

Commencing at the Northeast corner of the Northwest 1/4 of said Section 21; thence South 00°45'55" East, along the East line of the Northwest 1/4 of Section 21, and the centerline of River Lane, 1763.93 feet to the place of beginning of the parcel of land hereinafter described; thence continuing South 00°45'55" East, along the East line of the Northwest 1/4 of Section 21, and the centerline of River Lane, 584.00 feet; thence South 89°02'22" West, 1368.00 feet; thence North 00°45'55" West, 584.00 feet; thence North 89°02'22" East, 1368.00 feet to the place of beginning, dedicating therefrom the Easterly 60.00 feet for public road purposes. The net area remaining containing 17.536 acres, 763,867.6 sq. ft.

Project Identifier: **Wacker Neuson – Germantown Storage Expansion Area**
Date of Recording: **May 14, 2018**
Map Produced By: **Pinnacle Engineering Group**
Legal Description: **Part of the Southeast Quarter (SE ¼) and (SW ¼) of (NW ¼) Section 21, Township 9N, Range 20E Washington County, Wisconsin.**

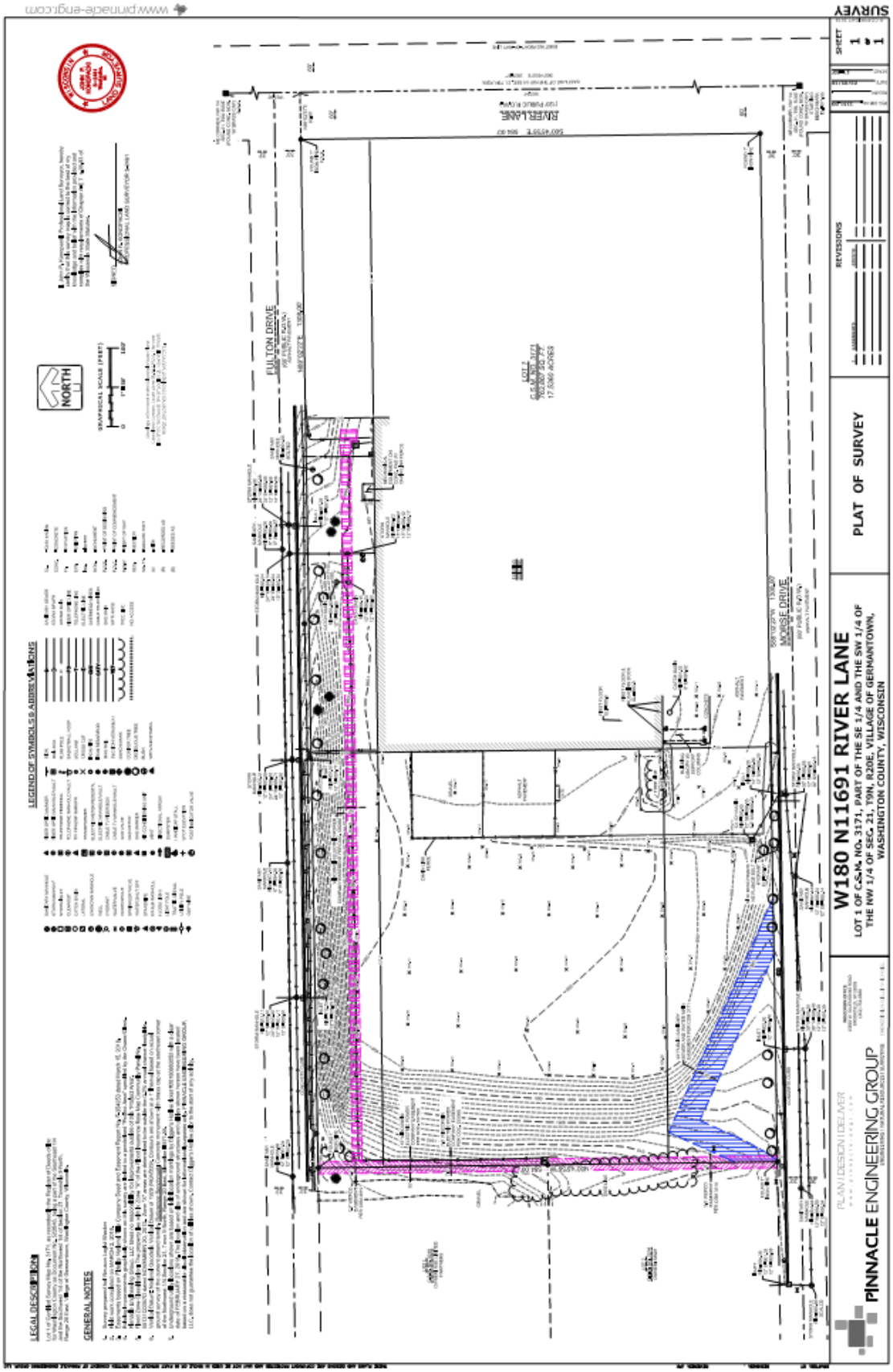
SURVEY
www.pinnacle-engr.com
PLAT OF SURVEY
W180 N11691 RIVER LANE
LOT 1 OF C.S.M. NO. 3171, PART OF THE SE 1/4 AND THE SW 1/4 OF THE NW 1/4 OF SEC. 21, T9N, R20E, VILLAGE OF GERMANTOWN, WASHINGTON COUNTY, WISCONSIN
PINNACLE ENGINEERING GROUP
PLAN / DESIGN / DELIVER
REVISIONS
SHEET
NORTH
GRAPHICAL SCALE (FEET)
LEGEND OF SYMBOLS & ABBREVIATIONS
LEGAL DESCRIPTION
GENERAL NOTES
FULTON DRIVE
RIVER LANE
MOOSE DRIVE

Exhibit B - Location Map
Storm Water Management Facilities Covered by this Declaration

The storm water management practices covered by this Declaration are depicted in the reduced copy of the construction plans, as shown below. The practices include two wet detention basins and all associated pipes, earthen berms, storm sewer and all associate structures, and other components of these practices.

Project Name**:** **Wacker Neuson – Germantown Storage Expansion Area**
Storm Water Practices**:** **Wet Detention Basins (2)**
Location of Practices**:** **Part of the Southeast Quarter (SE ¼) and (SW ¼) of (NW ¼) Section 21, Township 9N, Range 20E Washington County, Wisconsin.**
Owner: **Wacker Neuson Logistics America, LLC**

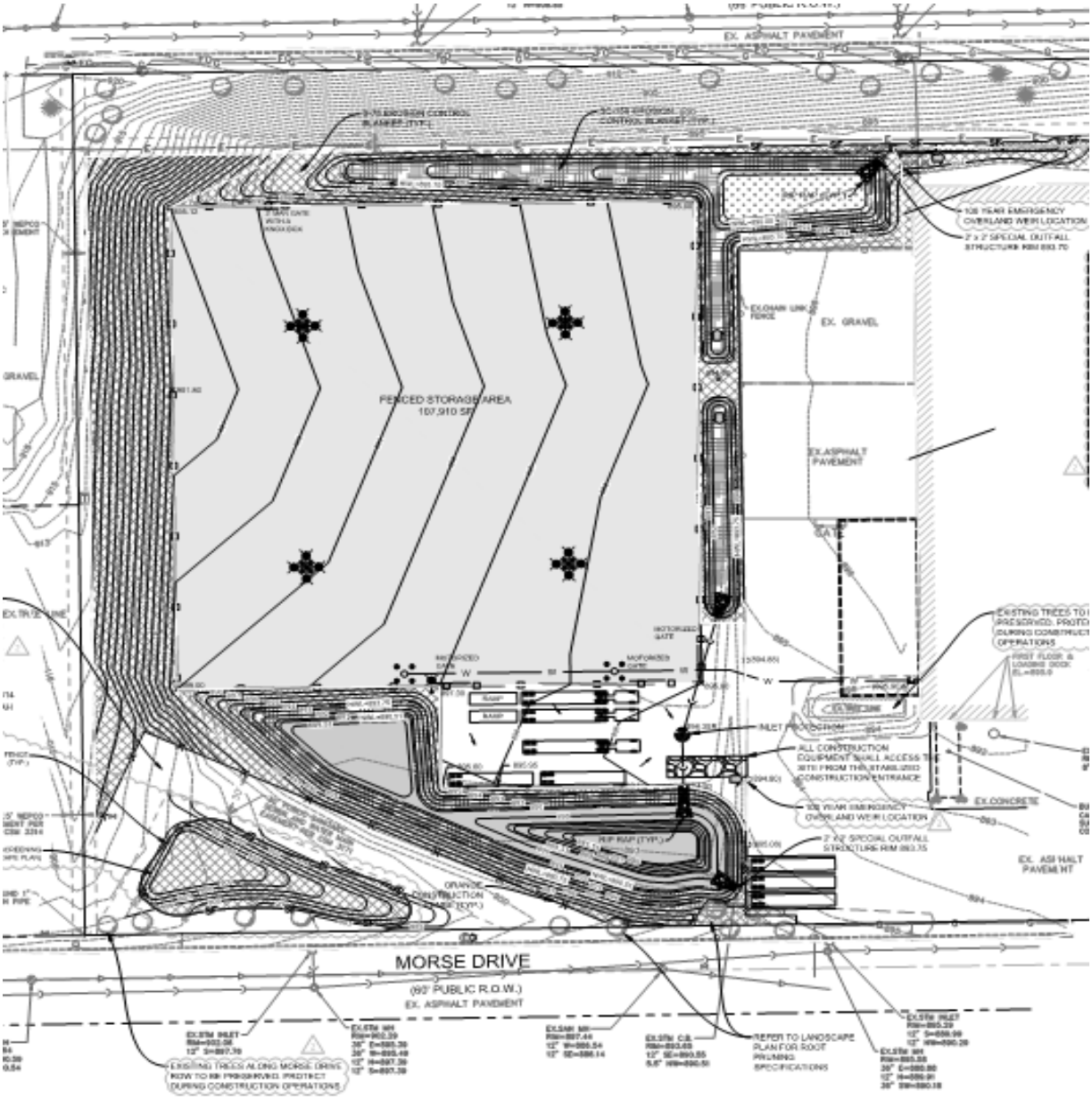

Exhibit C
Minimum Storm Water Management Facility Maintenance Requirements

This exhibit explains the basic function of each of the storm water management facilities shown on Exhibit B and prescribes the minimum maintenance requirements to remain compliant with conditions of development approval, storm water management plan acceptance, and Village ordinances and policies, as well as the rules of MMSD, and the Declaration to which this is appended. The maintenance activities listed below are aimed to ensure these facilities continue serving their intended functions in perpetuity. The list of activities is not all inclusive, but rather indicates the minimum type of maintenance that can be expected for this particular site. Access to the stormwater facilities for maintenance vehicles is shown in Exhibit B. Any failure of a storm water facility that is caused by a lack of maintenance will subject the Party to enforcement of the provisions in this Declaration, by the Village of Germantown.

System Description:
The wet detention basins are designed to trap at least 80% of sediment in runoff and maintain MMSD restricted peak flows. See cross sections and details below for pond basin design.

All elevations indicated in Exhibit C represent planned values and are presented in feet above mean sea level (NAD 1929). These are required to be field verified upon construction. Actual elevations (and more detailed information on the designs) can be obtained by contacting the Village of Germantown, and can be used as a reference point during maintenance inspections.

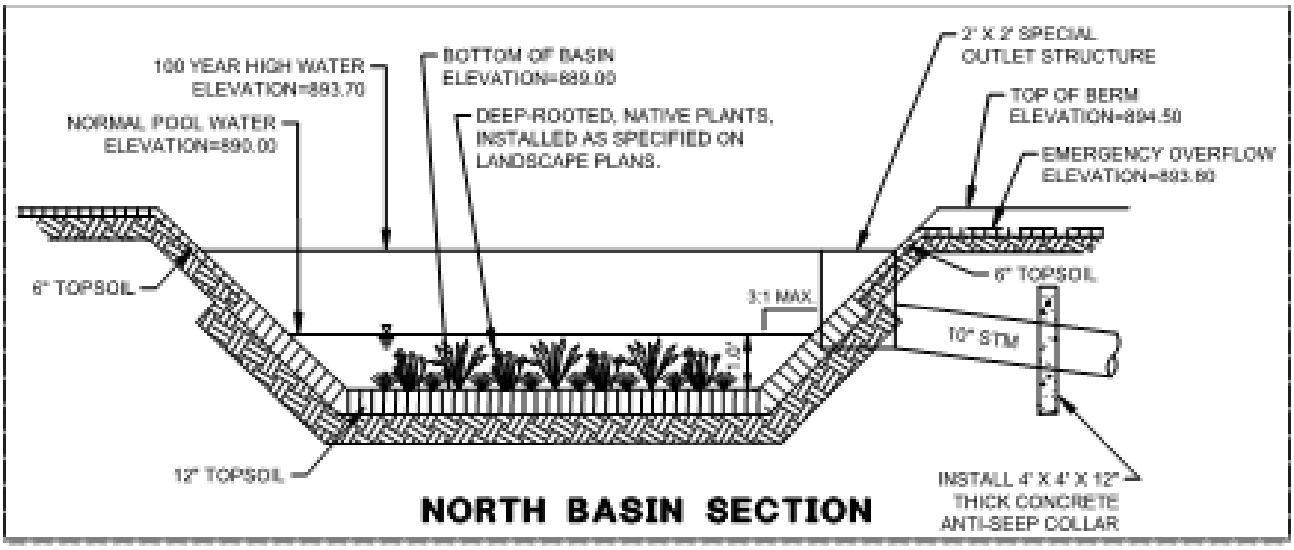

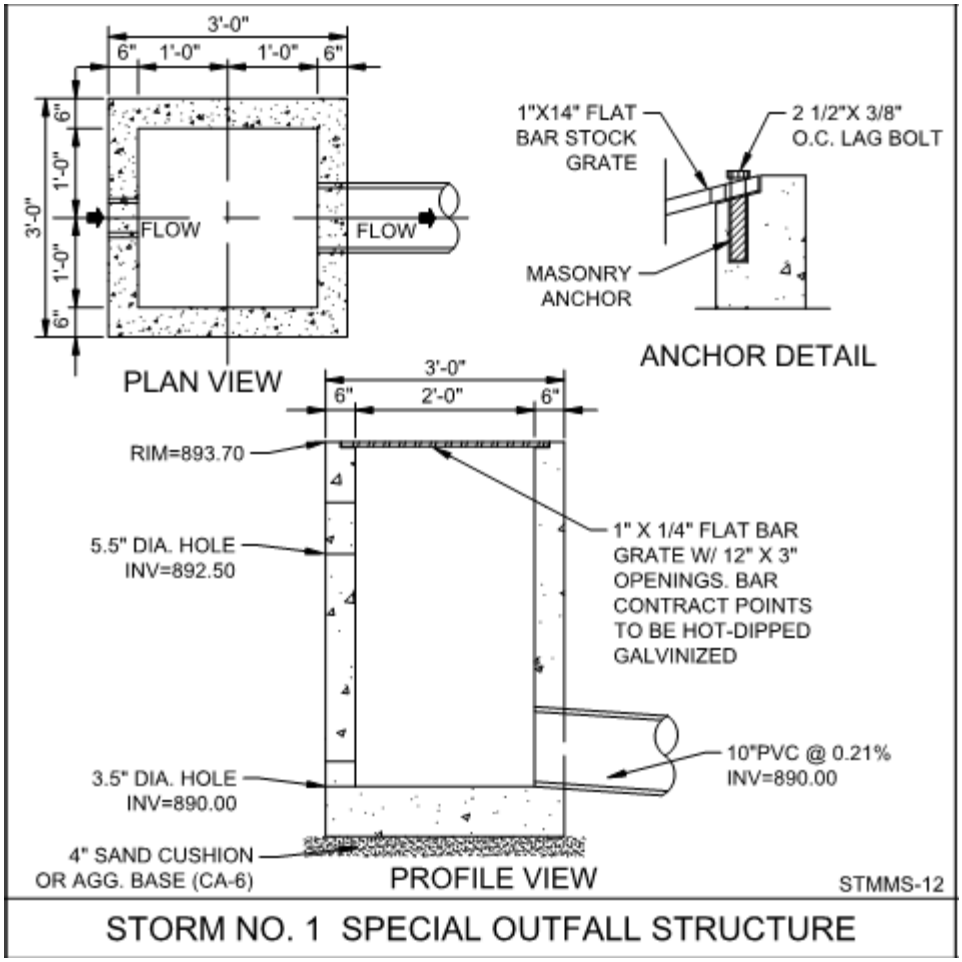

STORM NO. 1 SPECIAL OUTFALL STRUCTURE

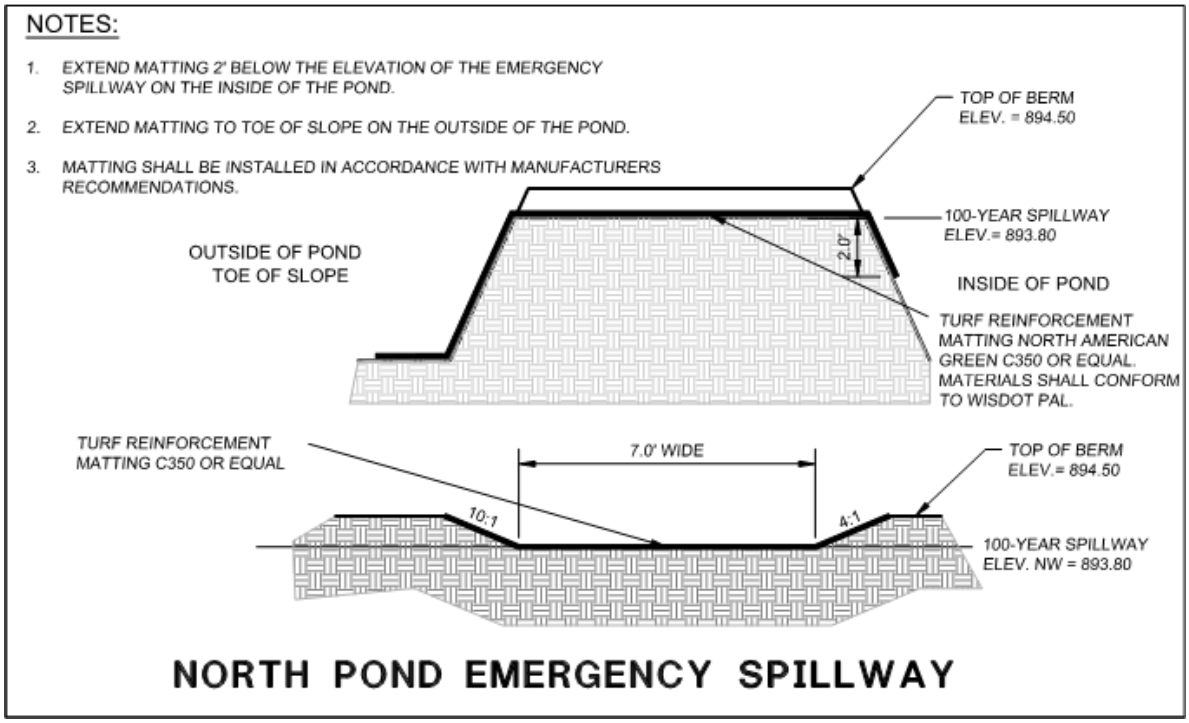

NORTH POND EMERGENCY SPILLWAY

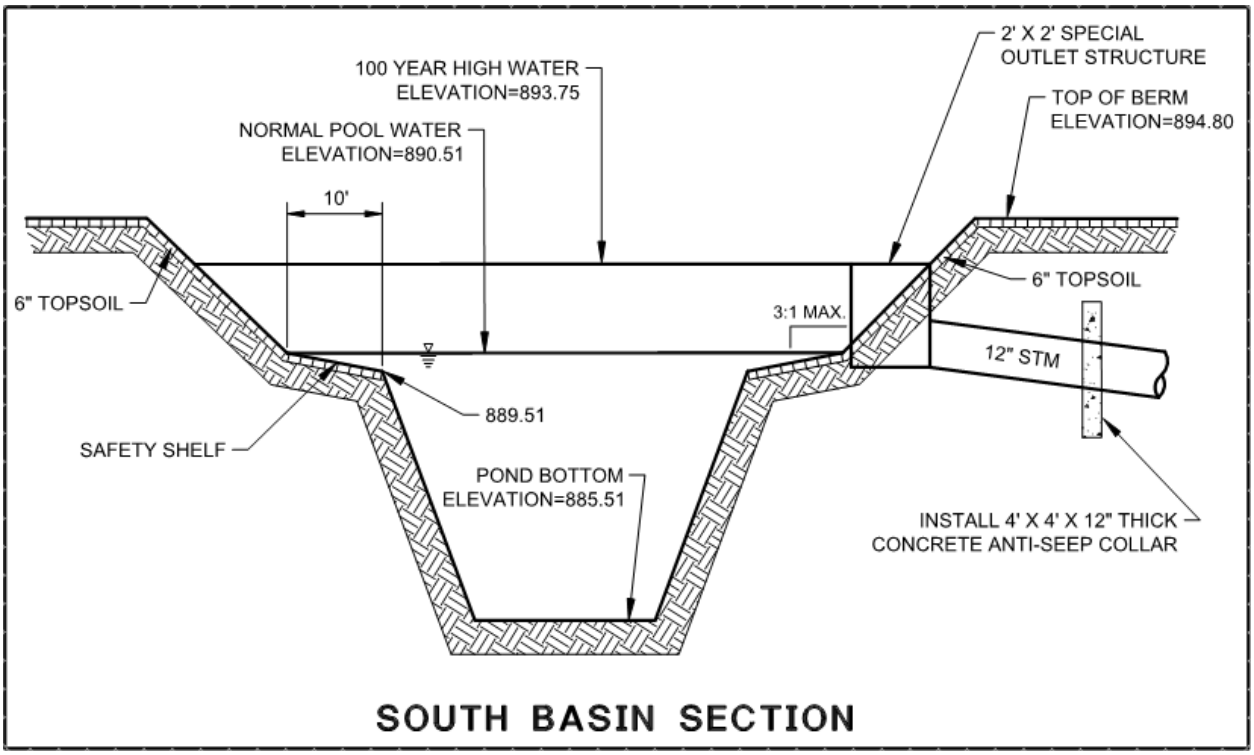

SOUTH BASIN SECTION

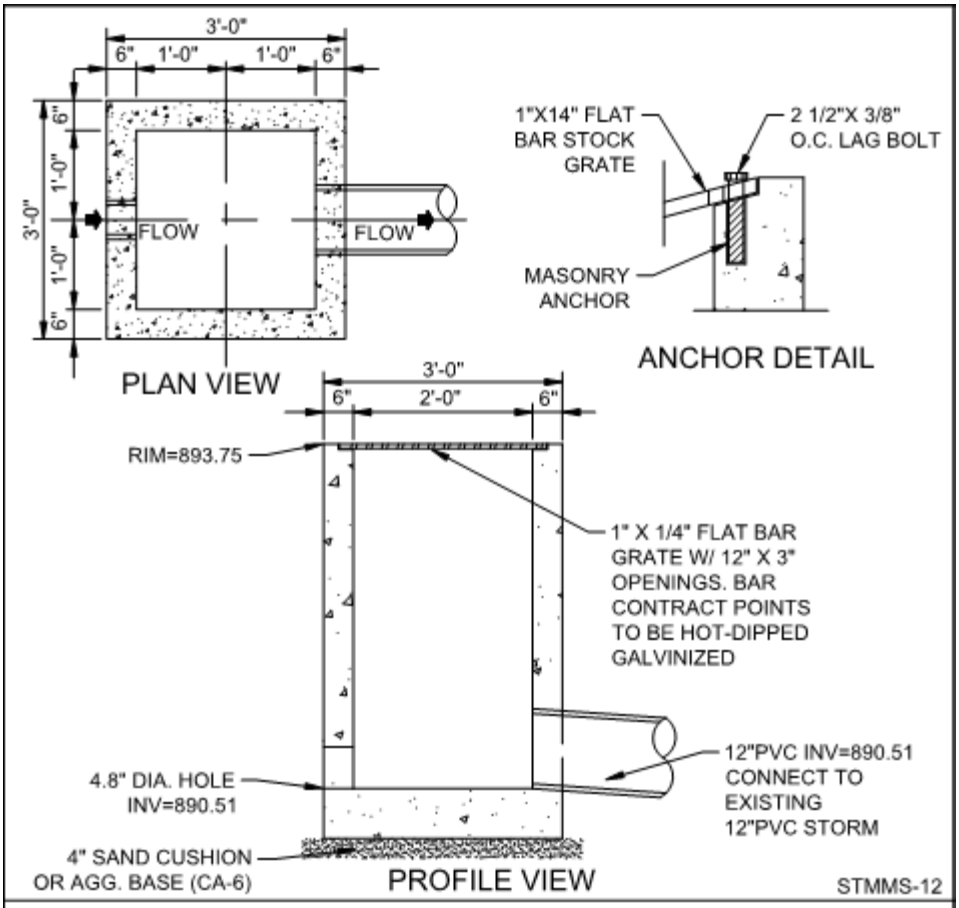

STORM NO. 7 SPECIAL OUTFALL STRUCTURE

Minimum Maintenance Requirements:

There is hereby incorporated by reference as though fully set forth at length, the latest edition of the Village of Germantown Stormwater Maintenance Manual for Private Facilities and Declarant shall observe all of the performance standards and undertake to perform all required inspection and maintenance activities provided therein, as a material provision of this covenant. All storm water wet, infiltration and bio-retention basins shall be inspected annually and/or after a 1/2" inch or more of rainfall in 24 hours.

Maintenance activities/procedures are required but are not limited to the following:

- Is the spillway level
- Adequate vegetation and ground cover
- Appropriate vegetation
- Adequate freeboard (Minimum of 1 foot from the top of the spillway to the top of the berm)
- Embankment erosion evident
- Cracking, bulging or sliding of embankment.
- Evidence of animal burrows
- Seepage evident on exterior face of embankment
- Vertical & horizontal alignment of top of dam as per plans
- Emergency spillway clear of obstructions and debris
- Maintenance access clear of obstruction
- Outfall channels functioning
- Under drain functioning
- Slope protection or rip-rap failures
- Undesirable vegetative growth
- Removal of floating debris required
- Visible oil/chemical presence
- Standing water or wet spots
- Sediment and/or trash accumulation
- Evidence of invasive species
- Evidence of excessive velocity/scour
- Encroachments on pond or easement area
- Complaints from residents
- Odor
- Grass mowing required
- Graffiti removal needed
- Insects in excess
- Any public hazards (specify)
- At least monthly, the site shall be inspected for spills (oil, grease, ect.). Spills shall be cleaned immediately and disposed of properly.
- No land disturbance (i.e. grading) of the basins or bio-retention facilities, other than for sediment removal, is allowed.
- Any other repair or maintenance needed to ensure the continued function of the storm water practices shall be implemented as needed.
- Any damaged portions of the storm sewer system shall be repaired and/or replace immediately. Upon system failure replace it with a WI Department of Commerce code compliant system.
- Any other repair or maintenance needed to ensure the continued function of the detention basin, bio-retention basin and infiltration basin as ordered by the Village of Germantown under the provisions listed on page 1 of this Agreement.

ASH GRAY ★

SR .48 SRI 56

Lumark

DESCRIPTION

The Prevail™ LED pole and fixture combination makes selection and installation of poles and fixtures simple. Included is the die-cast Prevail area, site and roadway luminaire with standard mounting arm, square straight steel pole, anchor bolts, base cover, template and hardware. Stock configurations are available in single and dual fixture combinations. The Prevail luminaire delivers a new level of versatility and value in patent pending, architectural design that delivers energy savings greater than 62% and replaces 150-450W metal halide fixtures. The Prevail fixture and pole combo is ideal for general area/site lighting applications.

Catalog #	PFPRV-2-A40-T4-20	Type
Project		OA(2)
Comments	4000K	Date
Prepared by	TDL	

SPECIFICATION FEATURES

Construction
Construction is comprised of a heavy-duty, single-piece die-cast aluminum housing in dark bronze polyester powder paint. The die-cast aluminum door is tethered to provide easy access to the driver if replacement is required. The optics is mounted on a versatile, aluminum plate that dissipates heat from the LEDs resulting in longer life of the fixture. The fixture is IP66 and 3G vibration rated (ANSI C136.31).

Optics
Available in Type III and IV distributions with lumen packages ranging from 6,173 to 18,992 nominal lumens. Light engine configurations consist of 1 or 2 high-efficacy LEDs mounted to metal-core circuit boards to maximize heat dissipation and promote long life (up to L92/60,000 hours at 25°C) per IESNA TM-21. For the ultimate level of spill light control, an optional house side shield accessory can be field or factory installed.

Electrical
Available in 120-277V 50/60Hz. 10kV/10kA surge protection standard. 0-10V dimming driver is standard with leads external to the fixture to accommodate controls capability such as dimming and occupancy. Suitable for ambient temperatures from -40°C to 40°C.

Controls
An integrated dimming and occupancy sensor is available in bi-level dimming (MSP/DIM) operation.

Mounting
The versatile, patent pending, standard mount arm accommodates multiple drill patterns ranging from 1-1/2" to 4-7/8". Removal of the door on the standard mounting arm enables wiring of the fixture without having to access the driver compartment. A knock-out on the standard mounting arm enables round pole mounting.

Pole
Shaft is one-piece construction ASTM A500 grade "B" steel, shot blasted and finished in dark bronze polyester powder coat. Anchor base is fabricated from ASTM grade steel. ASTM A366 steel full base cover is provided to enclose base plate and anchor bolts. Anchor bolts are per ASTM A576 with two nuts, two flat washers, and one lock washer. Hardware and threaded portion of bolt are hot dip galvanized. 3" hook for 3/4" bolt. 4" hook for 1" bolt.

Finish
Housing and cast parts finished in five-stage super TGIC polyester bronze powder coat paint, 2.5 mil nominal thickness for superior protection against fade and wear.

Warranty
Five-year warranty.

PFPRV PREVAIL POLE AND FIXTURE COMBO

LED

POLE AND FIXTURE COMBO

DIMENSIONS

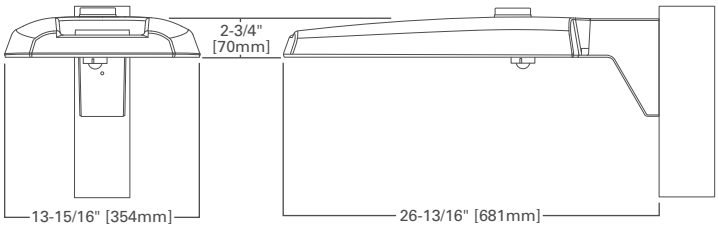

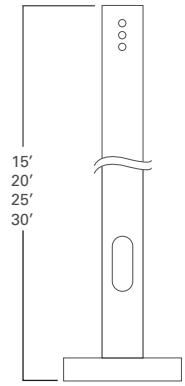

POLE MOUNT ARM

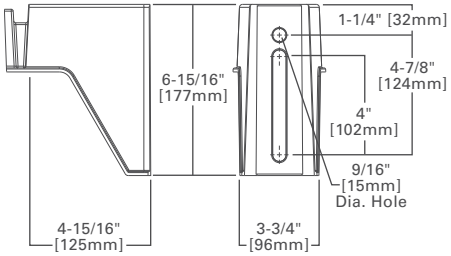

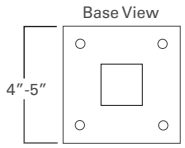

CERTIFICATION DATA
UL and cUL Wet Location Listed
IP66-Rated
3G Vibration Rated
ISO 9001
DesignLights Consortium™ Qualified*

ENERGY DATA
Electronic LED Driver
0.9 Power Factor
<20% Total Harmonic Distortion
120-277V/50 and 60Hz,
347V/60Hz, 480V/60Hz
-40°C Minimum Temperature Rating
+40°C Ambient Temperature Rating

EPA
Effective Projected Area (Sq. Ft.): 0.75
(1 fixture)

SHIPPING DATA
Approximate Net Weight:
20lbs. [9.09 kgs.] **(1 fixture)**

EATON
Powering Business Worldwide

*www.designlights.org

ORDERING INFORMATION

Sample Number: PFPRV-1-A25-T3-15-N/AB

Series [1, 2, 3]	**Number of Fixtures**	**Light Engine**	**Distribution**	**Pole Height**	**Maximum Wind Zone** (MPH)	**Options** (Add as Suffix)	**Accessories** (Order Separately)
PFPRV=Prevail Pole and Fixture Combo	**1**=1 **2**=2 **3**=3 **4**=4	**A15**=(1 LED) 6,100 Nominal Lumens **A25**=(2 LED) 10,200 Nominal Lumens **A40**=(2 LED) 15,100 Nominal Lumens **A60**=(2 LED) 18,900 Nominal Lumens	**T3**=Type III **T4**=Type IV	**15**=15' **20**=20' **25**=25' **30**=30'	**Blank**=80 **9**=90 **0**=100	**N/AB**=No Anchor Bolts (Used when ordered separately) **HSS**=House Side Shield **MSP/DIM-L12**=Integrated Sensor for Dimming Operation, 8' - 12' Mounting Height **MSP/DIM-L30**=Integrated Sensor for Dimming Operation, 12' - 30' Mounting Height **PER**=NEMA 3PIN Twistlock Photocontrol Receptacle [4] **PER7**=NEMA 7PIN Twistlock Photocontrol Receptacle [4]	**HS/VERD**=House Side Shield

NOTES: 1 4000K CCT, standard bronze, 120-277V, 0-10V dimming. **2** Standard mount arm included with fixture. Supplied with straight steel shaft, anchor bolts, template, base cover and hardware. **3** DesignLights Consortium™ Qualified and classified for DLC standard, refer to www.designlights.org for details. **4** Not available with MSP options.

POWER AND LUMENS

Light Engine		**A15**	**A25**	**A40**	**A60**
Nominal Power (Watts)		57W	87W	143W	163W
Input Current @ 120V (A)		0.49	0.76	1.23	1.34
Input Current @ 277V (A)		0.22	0.35	0.54	0.60
Input Current @ 347V (A)		0.18	0.28	0.45	0.49
Input Current @ 480V (A)		0.13	0.21	0.33	0.35
Type II	Lumens	6,139	10,204	15,073	18,830
	BUG Rating	B1-U0-G1	B2-U0-G2	B3-U0-G3	B3-U0-G3
Type III	Lumens	6,192	10,292	15,203	18,992
	BUG Rating	B1-U0-G2	B2-U0-G3	B2-U0-G3	B3-U0-G4
Type IV	Lumens	6,173	10,261	15,157	18,935
	BUG Rating	B1-U0-G3	B2-U0-G3	B2-U0-G4	B2-U0-G5
Type V	Lumens	6,393	10,627	15,697	19,610
	BUG Rating	B3-U0-G3	B4-U0-G3	B4-U0-G4	B5-U0-G4

NOTE: Lumen output for standard bronze fixture color. Different housing colors impact lumen output. IES files for the non-standard colors are available upon request.

LUMEN MAINTENANCE

Ambient Temperature	**25,000 Hours***	**50,000 Hours***	**60,000 Hours***	**Theoretical 100,000 Hours**	**Theoretical L70 (Hours)***
25°C	> 96%	> 93%	> 92%	> 87%	> 260,000
40°C	> 96%	> 93%	> 92%	> 87%	> 255,000
50°C	> 95%	> 92%	> 91%	> 86%	> 250,000

* Per IESNA TM-21 data.

LUMEN MULTIPLIER

Ambient Temperature	**Lumen Multiplier**
10°C	1.02
15°C	1.01
25°C	1.00
40°C	0.99

ONE FIXTURE CONFIGURATION
(30FT CONFIGURATIONS WITH 80, 90 AND 100MPH WIND ZONES USE A 5" POLE)

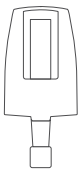

EPA=0.75
T3=18,992
T4=18,935

Mounting Height (Feet)	Lumens (Nominal)	Distribution	Maximum Wind Zone (MPH)			HID Equivalent (Wattage)
			80	90	100	
15'	6,192	Type III	PFPRV-1-A15-T3-15 [2]	PFPRV-1-A15-T3-15-9 [2]	PFPRV-1-A15-T3-15-0 [2]	150W
	6,173	Type IV	PFPRV-1-A15-T4-15 [2]	PFPRV-1-A15-T4-15-9 [2]	PFPRV-1-A15-T4-15-0 [2]	150W
	10,292	Type III	PFPRV-1-A25-T3-15 [2]	PFPRV-1-A25-T3-15-9 [2]	PFPRV-1-A25-T3-15-0 [2]	250W
	10,261	Type IV	PFPRV-1-A25-T4-15 [2]	PFPRV-1-A25-T4-15-9 [2]	PFPRV-1-A25-T4-15-0 [2]	250W
	15,203	Type III	PFPRV-1-A40-T3-15 [2]	PFPRV-1-A40-T3-15-9 [2]	PFPRV-1-A40-T3-15-0 [2]	400W
	15,157	Type IV	PFPRV-1-A40-T4-15 [2]	PFPRV-1-A40-T4-15-9 [2]	PFPRV-1-A40-T4-15-0 [2]	400W
	18,992	Type III	PFPRV-1-A60-T3-15 [2]	PFPRV-1-A60-T3-15-9 [2]	PFPRV-1-A60-T3-15-0 [2]	450W
	18,935	Type IV	PFPRV-1-A60-T4-15 [2]	PFPRV-1-A60-T4-15-9 [2]	PFPRV-1-A60-T4-15-0 [2]	450W
20'	6,192	Type III	PFPRV-1-A15-T3-20 [2]	PFPRV-1-A15-T3-20-9 [2]	PFPRV-1-A15-T3-20-0 [2]	150W
	6,173	Type IV	PFPRV-1-A15-T4-20 [2]	PFPRV-1-A15-T4-20-9 [2]	PFPRV-1-A15-T4-20-0 [2]	150W
	10,292	Type III	PFPRV-1-A25-T3-20 [2]	PFPRV-1-A25-T3-20-9 [2]	PFPRV-1-A25-T3-20-0 [2]	250W
	10,261	Type IV	PFPRV-1-A25-T4-20 [2]	PFPRV-1-A25-T4-20-9 [2]	PFPRV-1-A25-T4-20-0 [2]	250W
	15,203	Type III	PFPRV-1-A40-T3-20 [2]	PFPRV-1-A40-T3-20-9 [2]	PFPRV-1-A40-T3-20-0 [2]	400W
	15,157	Type IV	PFPRV-1-A40-T4-20 [2]	PFPRV-1-A40-T4-25-9 [2]	PFPRV-1-A40-T4-20-0 [2]	400W
	18,992	Type III	PFPRV-1-A60-T3-20 [2]	PFPRV-1-A60-T3-20-9 [2]	PFPRV-1-A60-T3-20-0 [2]	450W
	18,935	Type IV	PFPRV-1-A60-T4-20 [2]	PFPRV-1-A60-T4-20-9 [2]	PFPRV-1-A60-T4-20-0 [2]	450W
25'	6,192	Type III	PFPRV-1-A15-T3-25 [2]	PFPRV-1-A15-T3-25-9 [2]	PFPRV-1-A15-T3-25-0 [2]	150W
	6,173	Type IV	PFPRV-1-A15-T4-25 [2]	PFPRV-1-A15-T4-25-9 [2]	PFPRV-1-A15-T4-25-0 [2]	150W
	10,292	Type III	PFPRV-1-A25-T3-25 [2]	PFPRV-1-A25-T3-25-9 [2]	PFPRV-1-A25-T3-25-0 [2]	250W
	10,261	Type IV	PFPRV-1-A25-T4-25 [2]	PFPRV-1-A25-T4-25-9 [2]	PFPRV-1-A25-T4-25-0 [2]	250W
	15,203	Type III	PFPRV-1-A40-T3-25 [2]	PFPRV-1-A40-T3-25-9 [2]	PFPRV-1-A40-T3-25-0 [2]	400W
	15,157	Type IV	PFPRV-1-A40-T4-25 [2]	PFPRV-1-A40-T4-25-9 [2]	PFPRV-1-A40-T4-25-0 [2]	400W
	18,992	Type III	PFPRV-1-A60-T3-25 [2]	PFPRV-1-A60-T3-25-9 [2]	PFPRV-1-A60-T3-25-0 [2]	450W
	18,935	Type IV	PFPRV-1-A60-T4-25 [2]	PFPRV-1-A60-T4-25-9 [2]	PFPRV-1-A60-T4-25-0 [2]	450W
30'	6,192	Type III	PFPRV-1-A15-T3-30 [3]	PFPRV-1-A15-T3-30-9 [3]	PFPRV-1-A15-T3-30-0 [4]	150W
	6,173	Type IV	PFPRV-1-A15-T4-30 [3]	PFPRV-1-A15-T4-30-9 [3]	PFPRV-1-A15-T4-30-0 [4]	150W
	10,292	Type III	PFPRV-1-A25-T3-30 [3]	PFPRV-1-A25-T3-30-9 [3]	PFPRV-1-A25-T3-30-0 [4]	250W
	10,261	Type IV	PFPRV-1-A25-T4-30 [3]	PFPRV-1-A25-T4-30-9 [3]	PFPRV-1-A25-T4-30-0 [4]	250W
	15,203	Type III	PFPRV-1-A40-T3-30 [3]	PFPRV-1-A40-T3-30-9 [3]	PFPRV-1-A40-T3-30-0 [4]	400W
	15,157	Type IV	PFPRV-1-A40-T4-30 [3]	PFPRV-1-A40-T4-30-9 [3]	PFPRV-1-A40-T4-30-0 [4]	400W
	18,992	Type III	PFPRV-1-A60-T3-30 [3]	PFPRV-1-A60-T3-30-9 [3]	PFPRV-1-A60-T3-30-0 [4]	450W
	18,935	Type IV	PFPRV-1-A60-T4-30 [3]	PFPRV-1-A60-T4-30-9 [3]	PFPRV-1-A60-T4-30-0 [4]	450W

NOTES:

1. Customer is responsible for engineering analysis to confirm pole and fixture compatibility for all applications. Refer to installation instructions IB500002EN and pole white paper WP513001EN for additional support information.

2. Supplied with 4A Square Straight Steel Shaft (SSS), Anchor Bolts (AB1), Template (TMP1), hardware and base cover. 15' combo SS4A15SFM4, 20' combo SS4A20SFM4, and 25' combo SS4A25SFM4.

3. Supplied with 5A Square Straight Steel Shaft (SSS), Anchor Bolts (AB1), Template (TMP1), hardware and base cover. 30' combo SS5A30SFM4.

4. Supplied with 5M Square Straight Steel Shaft (SSS), Anchor Bolts (AB1), Template (TMP1), hardware and base cover. 30' combo SS5M30SFM4.

5. Refer to In Stock Guide for stocked configurations and availability.

TWO FIXTURE CONFIGURATION
(30FT CONFIGURATIONS WITH 80, 90, 100MPH WIND ZONES AND 25FT CONFIGURATIONS WITH 100MPH WIND ZONE USE 5" POLES)

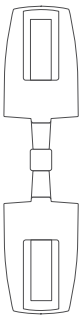

EPA=1.50

Mounting Height (Feet)	Lumens (Nominal)	Distribution	Maximum Wind Zone (MPH)			HID Equivalent (Wattage)
			80	90	100	
15'	6,192	Type III	PFPRV-2-A15-T3-15 [2]	PFPRV-2-A15-T3-15-9 [2]	PFPRV-2-A15-T3-15-0 [2]	150W
	6,173	Type IV	PFPRV-2-A15-T4-15 [2]	PFPRV-2-A15-T4-15-9 [2]	PFPRV-2-A15-T4-15-0 [2]	150W
	10,292	Type III	PFPRV-2-A25-T3-15 [2]	PFPRV-2-A25-T3-15-9 [2]	PFPRV-2-A25-T3-15-0 [2]	250W
	10,261	Type IV	PFPRV-2-A25-T4-15 [2]	PFPRV-2-A25-T4-15-9 [2]	PFPRV-2-A25-T4-15-0 [2]	250W
	15,203	Type III	PFPRV-2-A40-T3-15 [2]	PFPRV-2-A40-T3-15-9 [2]	PFPRV-2-A40-T3-15-0 [2]	400W
	15,157	Type IV	PFPRV-2-A40-T4-15 [2]	PFPRV-2-A40-T4-15-9 [2]	PFPRV-2-A40-T4-15-0 [2]	400W
	18,992	Type III	PFPRV-2-A60-T3-15 [2]	PFPRV-2-A60-T3-15-9 [2]	PFPRV-2-A60-T3-15-0 [2]	450W
	18,935	Type IV	PFPRV-2-A60-T4-15 [2]	PFPRV-2-A60-T4-15-9 [2]	PFPRV-2-A60-T4-15-0 [2]	450W
20'	6,192	Type III	PFPRV-2-A15-T3-20 [2]	PFPRV-2-A15-T3-20-9 [2]	PFPRV-2-A15-T3-20-0 [2]	150W
	6,173	Type IV	PFPRV-2-A15-T4-20 [2]	PFPRV-2-A15-T4-20-9 [2]	PFPRV-2-A15-T4-20-0 [2]	150W
	10,292	Type III	PFPRV-2-A25-T3-20 [2]	PFPRV-2-A25-T3-20-9 [2]	PFPRV-2-A25-T3-20-0 [2]	250W
	10,261	Type IV	PFPRV-2-A25-T4-20 [2]	PFPRV-2-A25-T4-20-9 [2]	PFPRV-2-A25-T4-20-0 [2]	250W
	15,203	Type III	PFPRV-2-A40-T3-20 [2]	PFPRV-2-A40-T3-20-9 [2]	PFPRV-2-A40-T3-20-0 [2]	400W
	15,157	Type IV	PFPRV-2-A40-T4-20 [2]	PFPRV-2-A40-T4-25-9 [2]	PFPRV-2-A40-T4-20-0 [2]	400W
	18,992	Type III	PFPRV-2-A60-T3-20 [2]	PFPRV-2-A60-T3-20-9 [2]	PFPRV-2-A60-T3-20-0 [2]	450W
	18,935	Type IV	PFPRV-2-A60-T4-20 [2]	PFPRV-2-A60-T4-20-9 [2]	PFPRV-2-A60-T4-20-0 [2]	450W
25'	6,192	Type III	PFPRV-2-A15-T3-25 [2]	PFPRV-2-A15-T3-25-9 [2]	PFPRV-2-A15-T3-25-0 [3]	150W
	6,173	Type IV	PFPRV-2-A15-T4-25 [2]	PFPRV-2-A15-T4-25-9 [2]	PFPRV-2-A15-T4-25-0 [3]	150W
	10,292	Type III	PFPRV-2-A25-T3-25 [2]	PFPRV-2-A25-T3-25-9 [2]	PFPRV-2-A25-T3-25-0 [3]	250W
	10,261	Type IV	PFPRV-2-A25-T4-25 [2]	PFPRV-2-A25-T4-25-9 [2]	PFPRV-2-A25-T4-25-0 [3]	250W
	15,203	Type III	PFPRV-2-A40-T3-25 [2]	PFPRV-2-A40-T3-25-9 [2]	PFPRV-2-A40-T3-25-0 [3]	400W
	15,157	Type IV	PFPRV-2-A40-T4-25 [2]	PFPRV-2-A40-T4-25-9 [2]	PFPRV-2-A40-T4-25-0 [3]	400W
	18,992	Type III	PFPRV-2-A60-T3-25 [2]	PFPRV-2-A60-T3-25-9 [2]	PFPRV-2-A60-T3-25-0 [3]	450W
	18,935	Type IV	PFPRV-2-A60-T4-25 [2]	PFPRV-2-A60-T4-25-9 [2]	PFPRV-2-A60-T4-25-0 [3]	450W
30'	6,192	Type III	PFPRV-2-A15-T3-30 [3]	PFPRV-2-A15-T3-30-9 [3]	PFPRV-2-A15-T3-30-0 [4]	150W
	6,173	Type IV	PFPRV-2-A15-T4-30 [3]	PFPRV-2-A15-T4-30-9 [3]	PFPRV-2-A15-T4-30-0 [4]	150W
	10,292	Type III	PFPRV-2-A25-T3-30 [3]	PFPRV-2-A25-T3-30-9 [3]	PFPRV-2-A25-T3-30-0 [4]	250W
	10,261	Type IV	PFPRV-2-A25-T4-30 [3]	PFPRV-2-A25-T4-30-9 [3]	PFPRV-2-A25-T4-30-0 [4]	250W
	15,203	Type III	PFPRV-2-A40-T3-30 [3]	PFPRV-2-A40-T3-30-9 [3]	PFPRV-2-A40-T3-30-0 [4]	400W
	15,157	Type IV	PFPRV-2-A40-T4-30 [3]	PFPRV-2-A40-T4-30-9 [3]	PFPRV-2-A40-T4-30-0 [4]	400W
	18,992	Type III	PFPRV-2-A60-T3-30 [3]	PFPRV-2-A60-T3-30-9 [3]	PFPRV-2-A60-T3-30-0 [4]	450W
	18,935	Type IV	PFPRV-2-A60-T4-30 [3]	PFPRV-2-A60-T4-30-9 [3]	PFPRV-2-A60-T4-30-0 [4]	450W

NOTES:

1. Customer is responsible for engineering analysis to confirm pole and fixture compatibility for all applications. Refer to installation instructions IB500002EN and pole white paper WP513001EN for additional support information.

2. Supplied with 4A Square Straight Steel Shaft (SSS), Anchor Bolts (AB1), Template (TMP1), hardware and base cover. 15' combo SS4A15SFM4, 20' combo SS4A20SFM4, and 25' combo SS4A25SFM4.

3. Supplied with 5A Square Straight Steel Shaft (SSS), Anchor Bolts (AB1), Template (TMP1), hardware and base cover. 25' combo SS5A25SFM4 and 30' combo SS5A30SFM4.

4. Supplied with 5M Square Straight Steel Shaft (SSS), Anchor Bolts (AB1), Template (TMP1), hardware and base cover. 30' combo SS5M30SFM4.

5. Refer to In Stock Guide for stocked configurations and availability.

THREE FIXTURE CONFIGURATION
(30FT CONFIGURATIONS WITH 80, 90, 100MPH WIND ZONES AND 25FT CONFIGURATIONS WITH 90, 100MPH WIND ZONE USE 5" POLES)

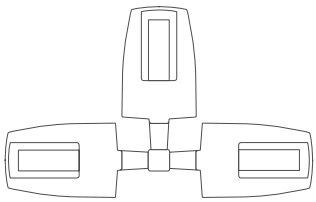

EPA=2.25

Mounting Height (Feet)	Lumens (Nominal)	Distribution	Maximum Wind Zone (MPH)			HID Equivalent (Wattage)
			80	90	100	
15'	6,192	Type III	PFPRV-3-A15-T3-15 [2]	PFPRV-3-A15-T3-15-9 [2]	PFPRV-3-A15-T3-15-0 [2]	150W
	6,173	Type IV	PFPRV-3-A15-T4-15 [2]	PFPRV-3-A15-T4-15-9 [2]	PFPRV-3-A15-T4-15-0 [2]	150W
	10,292	Type III	PFPRV-3-A25-T3-15 [2]	PFPRV-3-A25-T3-15-9 [2]	PFPRV-3-A25-T3-15-0 [2]	250W
	10,261	Type IV	PFPRV-3-A25-T4-15 [2]	PFPRV-3-A25-T4-15-9 [2]	PFPRV-3-A25-T4-15-0 [2]	250W
	15,203	Type III	PFPRV-3-A40-T3-15 [2]	PFPRV-3-A40-T3-15-9 [2]	PFPRV-3-A40-T3-15-0 [2]	400W
	15,157	Type IV	PFPRV-3-A40-T4-15 [2]	PFPRV-3-A40-T4-15-9 [2]	PFPRV-3-A40-T4-15-0 [2]	400W
	18,992	Type III	PFPRV-3-A60-T3-15 [2]	PFPRV-3-A60-T3-15-9 [2]	PFPRV-3-A60-T3-15-0 [2]	450W
	18,935	Type IV	PFPRV-3-A60-T4-15 [2]	PFPRV-3-A60-T4-15-9 [2]	PFPRV-3-A60-T4-15-0 [2]	450W
20'	6,192	Type III	PFPRV-3-A15-T3-20 [2]	PFPRV-3-A15-T3-20-9 [2]	PFPRV-3-A15-T3-20-0 [2]	150W
	6,173	Type IV	PFPRV-3-A15-T4-20 [2]	PFPRV-3-A15-T4-20-9 [2]	PFPRV-3-A15-T4-20-0 [2]	150W
	10,292	Type III	PFPRV-3-A25-T3-20 [2]	PFPRV-3-A25-T3-20-9 [2]	PFPRV-3-A25-T3-20-0 [2]	250W
	10,261	Type IV	PFPRV-3-A25-T4-20 [2]	PFPRV-3-A25-T4-20-9 [2]	PFPRV-3-A25-T4-20-0 [2]	250W
	15,203	Type III	PFPRV-3-A40-T3-20 [2]	PFPRV-3-A40-T3-20-9 [2]	PFPRV-3-A40-T3-20-0 [2]	400W
	15,157	Type IV	PFPRV-3-A40-T4-20 [2]	PFPRV-3-A40-T4-25-9 [2]	PFPRV-3-A40-T4-20-0 [2]	400W
	18,992	Type III	PFPRV-3-A60-T3-20 [2]	PFPRV-3-A60-T3-20-9 [2]	PFPRV-3-A60-T3-20-0 [2]	450W
	18,935	Type IV	PFPRV-3-A60-T4-20 [2]	PFPRV-3-A60-T4-20-9 [2]	PFPRV-3-A60-T4-20-0 [2]	450W
25'	6,192	Type III	PFPRV-3-A15-T3-25 [2]	PFPRV-3-A15-T3-25-9 [3]	PFPRV-3-A15-T3-25-0 [3]	150W
	6,173	Type IV	PFPRV-3-A15-T4-25 [2]	PFPRV-3-A15-T4-25-9 [3]	PFPRV-3-A15-T4-25-0 [3]	150W
	10,292	Type III	PFPRV-3-A25-T3-25 [2]	PFPRV-3-A25-T3-25-9 [3]	PFPRV-3-A25-T3-25-0 [3]	250W
	10,261	Type IV	PFPRV-3-A25-T4-25 [2]	PFPRV-3-A25-T4-25-9 [3]	PFPRV-3-A25-T4-25-0 [3]	250W
	15,203	Type III	PFPRV-3-A40-T3-25 [2]	PFPRV-3-A40-T3-25-9 [3]	PFPRV-3-A40-T3-25-0 [3]	400W
	15,157	Type IV	PFPRV-3-A40-T4-25 [2]	PFPRV-3-A40-T4-25-9 [3]	PFPRV-3-A40-T4-25-0 [3]	400W
	18,992	Type III	PFPRV-3-A60-T3-25 [2]	PFPRV-3-A60-T3-25-9 [3]	PFPRV-3-A60-T3-25-0 [3]	450W
	18,935	Type IV	PFPRV-3-A60-T4-25 [2]	PFPRV-3-A60-T4-25-9 [3]	PFPRV-3-A60-T4-25-0 [3]	450W
30'	6,192	Type III	PFPRV-3-A15-T3-30 [3]	PFPRV-3-A15-T3-30-9 [4]	PFPRV-3-A15-T3-30-0 [4]	150W
	6,173	Type IV	PFPRV-3-A15-T4-30 [3]	PFPRV-3-A15-T4-30-9 [4]	PFPRV-3-A15-T4-30-0 [4]	150W
	10,292	Type III	PFPRV-3-A25-T3-30 [3]	PFPRV-3-A25-T3-30-9 [4]	PFPRV-3-A25-T3-30-0 [4]	250W
	10,261	Type IV	PFPRV-3-A25-T4-30 [3]	PFPRV-3-A25-T4-30-9 [4]	PFPRV-3-A25-T4-30-0 [4]	250W
	15,203	Type III	PFPRV-3-A40-T3-30 [3]	PFPRV-3-A40-T3-30-9 [4]	PFPRV-3-A40-T3-30-0 [4]	400W
	15,157	Type IV	PFPRV-3-A40-T4-30 [3]	PFPRV-3-A40-T4-30-9 [4]	PFPRV-3-A40-T4-30-0 [4]	400W
	18,992	Type III	PFPRV-3-A60-T3-30 [3]	PFPRV-3-A60-T3-30-9 [4]	PFPRV-3-A60-T3-30-0 [4]	450W
	18,935	Type IV	PFPRV-3-A60-T4-30 [3]	PFPRV-3-A60-T4-30-9 [4]	PFPRV-3-A60-T4-30-0 [4]	450W

NOTES:

1. Customer is responsible for engineering analysis to confirm pole and fixture compatibility for all applications. Refer to installation instructions IB500002EN and pole white paper WP513001EN for additional support information.

2. Supplied with 4A Square Straight Steel Shaft (SSS), Anchor Bolts (AB1), Template (TMP1), hardware and base cover. 15' combo SS4A15SFM4, 20' combo SS4A20SFM4, and 25' combo SS4A25SFM4.

3. Supplied with 5A Square Straight Steel Shaft (SSS), Anchor Bolts (AB1), Template (TMP1), hardware and base cover. 25' combo SS5A25SFM4 and 30' combo SS5A30SFM4.

4. Supplied with 5M Square Straight Steel Shaft (SSS), Anchor Bolts (AB1), Template (TMP1), hardware and base cover. 30' combo SS5M30SFM4.

5. Refer to In Stock Guide for availability.

FOUR FIXTURE CONFIGURATION
(30FT CONFIGURATIONS WITH 80, 90, 100MPH WIND ZONES AND 25FT CONFIGURATIONS WITH 100MPH WIND ZONE USE 5" POLES)

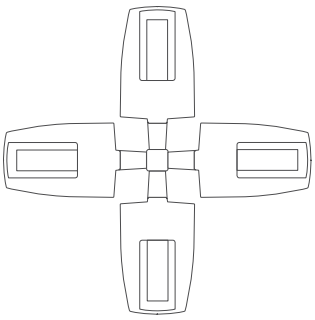

EPA=3.00

Mounting Height (Feet)	Lumens (Nominal)	Distribution	Maximum Wind Zone (MPH)			HID Equivalent (Wattage)
			80	90	100	
15'	6,192	Type III	PFPRV-4-A15-T3-15 [2]	PFPRV-4-A15-T3-15-9 [2]	PFPRV-4-A15-T3-15-0 [2]	150W
	6,173	Type IV	PFPRV-4-A15-T4-15 [2]	PFPRV-4-A15-T4-15-9 [2]	PFPRV-4-A15-T4-15-0 [2]	150W
	10,292	Type III	PFPRV-4-A25-T3-15 [2]	PFPRV-4-A25-T3-15-9 [2]	PFPRV-4-A25-T3-15-0 [2]	250W
	10,261	Type IV	PFPRV-4-A25-T4-15 [2]	PFPRV-4-A25-T4-15-9 [2]	PFPRV-4-A25-T4-15-0 [2]	250W
	15,203	Type III	PFPRV-4-A40-T3-15 [2]	PFPRV-4-A40-T3-15-9 [2]	PFPRV-4-A40-T3-15-0 [2]	400W
	15,157	Type IV	PFPRV-4-A40-T4-15 [2]	PFPRV-4-A40-T4-15-9 [2]	PFPRV-4-A40-T4-15-0 [2]	400W
	18,992	Type III	PFPRV-4-A60-T3-15 [2]	PFPRV-4-A60-T3-15-9 [2]	PFPRV-4-A60-T3-15-0 [2]	450W
	18,935	Type IV	PFPRV-4-A60-T4-15 [2]	PFPRV-4-A60-T4-15-9 [2]	PFPRV-4-A60-T4-15-0 [2]	450W
20'	6,192	Type III	PFPRV-4-A15-T3-20 [2]	PFPRV-4-A15-T3-20-9 [2]	PFPRV-4-A15-T3-20-0 [2]	150W
	6,173	Type IV	PFPRV-4-A15-T4-20 [2]	PFPRV-4-A15-T4-20-9 [2]	PFPRV-4-A15-T4-20-0 [2]	150W
	10,292	Type III	PFPRV-4-A25-T3-20 [2]	PFPRV-4-A25-T3-20-9 [2]	PFPRV-4-A25-T3-20-0 [2]	250W
	10,261	Type IV	PFPRV-4-A25-T4-20 [2]	PFPRV-4-A25-T4-20-9 [2]	PFPRV-4-A25-T4-20-0 [2]	250W
	15,203	Type III	PFPRV-4-A40-T3-20 [2]	PFPRV-4-A40-T3-20-9 [2]	PFPRV-4-A40-T3-20-0 [2]	400W
	15,157	Type IV	PFPRV-4-A40-T4-20 [2]	PFPRV-4-A40-T4-25-9 [2]	PFPRV-4-A40-T4-20-0 [2]	400W
	18,992	Type III	PFPRV-4-A60-T3-20 [2]	PFPRV-4-A60-T3-20-9 [2]	PFPRV-4-A60-T3-20-0 [2]	450W
	18,935	Type IV	PFPRV-4-A60-T4-20 [2]	PFPRV-4-A60-T4-20-9 [2]	PFPRV-4-A60-T4-20-0 [2]	450W
25'	6,192	Type III	PFPRV-4-A15-T3-25 [2]	PFPRV-4-A15-T3-25-9 [3]	PFPRV-4-A15-T3-25-0 [3]	150W
	6,173	Type IV	PFPRV-4-A15-T4-25 [2]	PFPRV-4-A15-T4-25-9 [3]	PFPRV-4-A15-T4-25-0 [3]	150W
	10,292	Type III	PFPRV-4-A25-T3-25 [2]	PFPRV-4-A25-T3-25-9 [3]	PFPRV-4-A25-T3-25-0 [3]	250W
	10,261	Type IV	PFPRV-4-A25-T4-25 [2]	PFPRV-4-A25-T4-25-9 [3]	PFPRV-4-A25-T4-25-0 [3]	250W
	15,203	Type III	PFPRV-4-A40-T3-25 [2]	PFPRV-4-A40-T3-25-9 [3]	PFPRV-4-A40-T3-25-0 [3]	400W
	15,157	Type IV	PFPRV-4-A40-T4-25 [2]	PFPRV-4-A40-T4-25-9 [3]	PFPRV-4-A40-T4-25-0 [3]	400W
	18,992	Type III	PFPRV-4-A60-T3-25 [2]	PFPRV-4-A60-T3-25-9 [3]	PFPRV-4-A60-T3-25-0 [3]	450W
	18,935	Type IV	PFPRV-4-A60-T4-25 [2]	PFPRV-4-A60-T4-25-9 [3]	PFPRV-4-A60-T4-25-0 [3]	450W
30'	6,192	Type III	PFPRV-4-A15-T3-30 [3]	PFPRV-4-A15-T3-30-9 [4]	PFPRV-4-A15-T3-30-0 [4]	150W
	6,173	Type IV	PFPRV-4-A15-T4-30 [3]	PFPRV-4-A15-T4-30-9 [4]	PFPRV-4-A15-T4-30-0 [4]	150W
	10,292	Type III	PFPRV-4-A25-T3-30 [3]	PFPRV-4-A25-T3-30-9 [4]	PFPRV-4-A25-T3-30-0 [4]	250W
	10,261	Type IV	PFPRV-4-A25-T4-30 [3]	PFPRV-4-A25-T4-30-9 [4]	PFPRV-4-A25-T4-30-0 [4]	250W
	15,203	Type III	PFPRV-4-A40-T3-30 [3]	PFPRV-4-A40-T3-30-9 [4]	PFPRV-4-A40-T3-30-0 [4]	400W
	15,157	Type IV	PFPRV-4-A40-T4-30 [3]	PFPRV-4-A40-T4-30-9 [4]	PFPRV-4-A40-T4-30-0 [4]	400W
	18,992	Type III	PFPRV-4-A60-T3-30 [3]	PFPRV-4-A60-T3-30-9 [4]	PFPRV-4-A60-T3-30-0 [4]	450W
	18,935	Type IV	PFPRV-4-A60-T4-30 [3]	PFPRV-4-A60-T4-30-9 [4]	PFPRV-4-A60-T4-30-0 [4]	450W

NOTES:

1. Customer is responsible for engineering analysis to confirm pole and fixture compatibility for all applications. Refer to installation instructions IB500002EN and pole white paper WP513001EN for additional support information.

2. Supplied with 4A Square Straight Steel Shaft (SSS), Anchor Bolts (AB1), Template (TMP1), hardware and base cover. 15' combo SS4A15SFM4, 20' combo SS4A20SFM4, and 25' combo SS4A25SFM4.

3. Supplied with 5A Square Straight Steel Shaft (SSS), Anchor Bolts (AB1), Template (TMP1), hardware and base cover. 25' combo SS5A25SFM4 and 30' combo SS5A30SFM4.

4. Supplied with 5M Square Straight Steel Shaft (SSS), Anchor Bolts (AB1), Template (TMP1), hardware and base cover. 30' combo SS5M30SFM4.

5. Refer to In Stock Guide for availability.

Lumark

DESCRIPTION

The Prevail™ LED pole and fixture combination makes selection and installation of poles and fixtures simple. Included is the die-cast Prevail area, site and roadway luminaire with standard mounting arm, square straight steel pole, anchor bolts, base cover, template and hardware. Stock configurations are available in single and dual fixture combinations. The Prevail luminaire delivers a new level of versatility and value in patent pending, architectural design that delivers energy savings greater than 62% and replaces 150-450W metal halide fixtures. The Prevail fixture and pole combo is ideal for general area/site lighting applications.

		Type
Catalog #	PFPRV-4-A40-T4-20	OA(4)
Project		
Comments	4000K	Date
Prepared by	TDL	

SPECIFICATION FEATURES

Construction
Construction is comprised of a heavy-duty, single-piece die-cast aluminum housing in dark bronze polyester powder paint. The die-cast aluminum door is tethered to provide easy access to the driver if replacement is required. The optics is mounted on a versatile, aluminum plate that dissipates heat from the LEDs resulting in longer life of the fixture. The fixture is IP66 and 3G vibration rated (ANSI C136.31).

Optics
Available in Type III and IV distributions with lumen packages ranging from 6,173 to 18,992 nominal lumens. Light engine configurations consist of 1 or 2 high-efficacy LEDs mounted to metal-core circuit boards to maximize heat dissipation and promote long life (up to L92/60,000 hours at 25°C) per IESNA TM-21. For the ultimate level of spill light control, an optional house side shield accessory can be field or factory installed.

Electrical
Available in 120-277V 50/60Hz. 10kV/10kA surge protection standard. 0-10V dimming driver is standard with leads external to the fixture to accommodate controls capability such as dimming and occupancy. Suitable for ambient temperatures from -40°C to 40°C.

Controls
An integrated dimming and occupancy sensor is available in bi-level dimming (MSP/DIM) operation.

Mounting
The versatile, patent pending, standard mount arm accommodates multiple drill patterns ranging from 1-1/2" to 4-7/8". Removal of the door on the standard mounting arm enables wiring of the fixture without having to access the driver compartment. A knock-out on the standard mounting arm enables round pole mounting.

Pole
Shaft is one-piece construction ASTM A500 grade "B" steel, shot blasted and finished in dark bronze polyester powder coat. Anchor base is fabricated from ASTM grade steel. ASTM A366 steel full base cover is provided to enclose base plate and anchor bolts. Anchor bolts are per ASTM A576 with two nuts, two flat washers, and one lock washer. Hardware and threaded portion of bolt are hot dip galvanized. 3" hook for 3/4" bolt. 4" hook for 1" bolt.

Finish
Housing and cast parts finished in five-stage super TGIC polyester bronze powder coat paint, 2.5 mil nominal thickness for superior protection against fade and wear.

Warranty
Five-year warranty.

PFPRV PREVAIL POLE AND FIXTURE COMBO

LED

POLE AND FIXTURE COMBO

DIMENSIONS

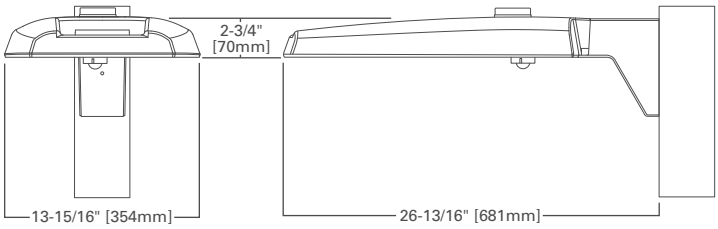

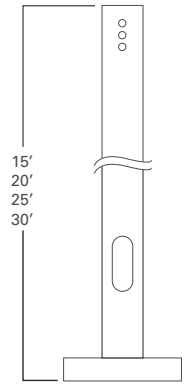

POLE MOUNT ARM

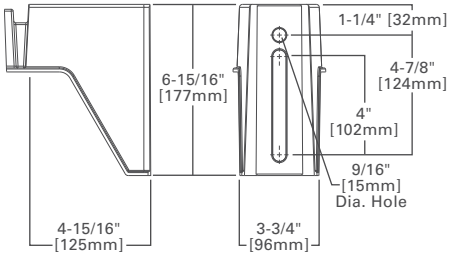

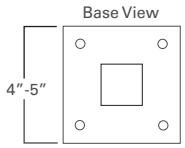

CERTIFICATION DATA
UL and cUL Wet Location Listed
IP66-Rated
3G Vibration Rated
ISO 9001
DesignLights Consortium™ Qualified*

ENERGY DATA
Electronic LED Driver
0.9 Power Factor
<20% Total Harmonic Distortion
120-277V/50 and 60Hz,
347V/60Hz, 480V/60Hz
-40°C Minimum Temperature Rating
+40°C Ambient Temperature Rating

EPA
Effective Projected Area (Sq. Ft.): 0.75
(1 fixture)

SHIPPING DATA
Approximate Net Weight:
20lbs. [9.09 kgs.] **(1 fixture)**

EATON
Powering Business Worldwide

*www.designlights.org

ORDERING INFORMATION

Sample Number: PFPRV-1-A25-T3-15-N/AB

Series [1, 2, 3]	**Number of Fixtures**	**Light Engine**	**Distribution**	**Pole Height**	**Maximum Wind Zone** (MPH)	**Options** (Add as Suffix)	**Accessories** (Order Separately)
PFPRV=Prevail Pole and Fixture Combo	**1**=1 **2**=2 **3**=3 **4**=4	**A15**=(1 LED) 6,100 Nominal Lumens **A25**=(2 LED) 10,200 Nominal Lumens **A40**=(2 LED) 15,100 Nominal Lumens **A60**=(2 LED) 18,900 Nominal Lumens	**T3**=Type III **T4**=Type IV	**15**=15' **20**=20' **25**=25' **30**=30'	**Blank**=80 **9**=90 **0**=100	**N/AB**=No Anchor Bolts (Used when ordered separately) **HSS**=House Side Shield **MSP/DIM-L12**=Integrated Sensor for Dimming Operation, 8' - 12' Mounting Height **MSP/DIM-L30**=Integrated Sensor for Dimming Operation, 12' - 30' Mounting Height **PER**=NEMA 3PIN Twistlock Photocontrol Receptacle [4] **PER7**=NEMA 7PIN Twistlock Photocontrol Receptacle [4]	**HS/VERD**=House Side Shield

NOTES: 1 4000K CCT, standard bronze, 120-277V, 0-10V dimming. **2** Standard mount arm included with fixture. Supplied with straight steel shaft, anchor bolts, template, base cover and hardware. **3** DesignLights Consortium™ Qualified and classified for DLC standard, refer to www.designlights.org for details. **4** Not available with MSP options.

POWER AND LUMENS

Light Engine		**A15**	**A25**	**A40**	**A60**
Nominal Power (Watts)		57W	87W	143W	163W
Input Current @ 120V (A)		0.49	0.76	1.23	1.34
Input Current @ 277V (A)		0.22	0.35	0.54	0.60
Input Current @ 347V (A)		0.18	0.28	0.45	0.49
Input Current @ 480V (A)		0.13	0.21	0.33	0.35
Type II	Lumens	6,139	10,204	15,073	18,830
	BUG Rating	B1-U0-G1	B2-U0-G2	B3-U0-G3	B3-U0-G3
Type III	Lumens	6,192	10,292	15,203	18,992
	BUG Rating	B1-U0-G2	B2-U0-G3	B2-U0-G3	B3-U0-G4
Type IV	Lumens	6,173	10,261	15,157	18,935
	BUG Rating	B1-U0-G3	B2-U0-G3	B2-U0-G4	B2-U0-G5
Type V	Lumens	6,393	10,627	15,697	19,610
	BUG Rating	B3-U0-G3	B4-U0-G3	B4-U0-G4	B5-U0-G4

NOTE: Lumen output for standard bronze fixture color. Different housing colors impact lumen output. IES files for the non-standard colors are available upon request.

LUMEN MAINTENANCE

Ambient Temperature	**25,000 Hours***	**50,000 Hours***	**60,000 Hours***	**Theoretical 100,000 Hours**	**Theoretical L70 (Hours)***
25°C	> 96%	> 93%	> 92%	> 87%	> 260,000
40°C	> 96%	> 93%	> 92%	> 87%	> 255,000
50°C	> 95%	> 92%	> 91%	> 86%	> 250,000

* Per IESNA TM-21 data.

LUMEN MULTIPLIER

Ambient Temperature	**Lumen Multiplier**
10°C	1.02
15°C	1.01
25°C	1.00
40°C	0.99

ONE FIXTURE CONFIGURATION
(30FT CONFIGURATIONS WITH 80, 90 AND 100MPH WIND ZONES USE A 5" POLE)

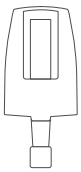

EPA=0.75
T3=18,992
T4=18,935

Mounting Height (Feet)	Lumens (Nominal)	Distribution	Maximum Wind Zone (MPH)			HID Equivalent (Wattage)
			80	90	100	
15'	6,192	Type III	PFPRV-1-A15-T3-15 [2]	PFPRV-1-A15-T3-15-9 [2]	PFPRV-1-A15-T3-15-0 [2]	150W
	6,173	Type IV	PFPRV-1-A15-T4-15 [2]	PFPRV-1-A15-T4-15-9 [2]	PFPRV-1-A15-T4-15-0 [2]	150W
	10,292	Type III	PFPRV-1-A25-T3-15 [2]	PFPRV-1-A25-T3-15-9 [2]	PFPRV-1-A25-T3-15-0 [2]	250W
	10,261	Type IV	PFPRV-1-A25-T4-15 [2]	PFPRV-1-A25-T4-15-9 [2]	PFPRV-1-A25-T4-15-0 [2]	250W
	15,203	Type III	PFPRV-1-A40-T3-15 [2]	PFPRV-1-A40-T3-15-9 [2]	PFPRV-1-A40-T3-15-0 [2]	400W
	15,157	Type IV	PFPRV-1-A40-T4-15 [2]	PFPRV-1-A40-T4-15-9 [2]	PFPRV-1-A40-T4-15-0 [2]	400W
	18,992	Type III	PFPRV-1-A60-T3-15 [2]	PFPRV-1-A60-T3-15-9 [2]	PFPRV-1-A60-T3-15-0 [2]	450W
	18,935	Type IV	PFPRV-1-A60-T4-15 [2]	PFPRV-1-A60-T4-15-9 [2]	PFPRV-1-A60-T4-15-0 [2]	450W
20'	6,192	Type III	PFPRV-1-A15-T3-20 [2]	PFPRV-1-A15-T3-20-9 [2]	PFPRV-1-A15-T3-20-0 [2]	150W
	6,173	Type IV	PFPRV-1-A15-T4-20 [2]	PFPRV-1-A15-T4-20-9 [2]	PFPRV-1-A15-T4-20-0 [2]	150W
	10,292	Type III	PFPRV-1-A25-T3-20 [2]	PFPRV-1-A25-T3-20-9 [2]	PFPRV-1-A25-T3-20-0 [2]	250W
	10,261	Type IV	PFPRV-1-A25-T4-20 [2]	PFPRV-1-A25-T4-20-9 [2]	PFPRV-1-A25-T4-20-0 [2]	250W
	15,203	Type III	PFPRV-1-A40-T3-20 [2]	PFPRV-1-A40-T3-20-9 [2]	PFPRV-1-A40-T3-20-0 [2]	400W
	15,157	Type IV	PFPRV-1-A40-T4-20 [2]	PFPRV-1-A40-T4-25-9 [2]	PFPRV-1-A40-T4-20-0 [2]	400W
	18,992	Type III	PFPRV-1-A60-T3-20 [2]	PFPRV-1-A60-T3-20-9 [2]	PFPRV-1-A60-T3-20-0 [2]	450W
	18,935	Type IV	PFPRV-1-A60-T4-20 [2]	PFPRV-1-A60-T4-20-9 [2]	PFPRV-1-A60-T4-20-0 [2]	450W
25'	6,192	Type III	PFPRV-1-A15-T3-25 [2]	PFPRV-1-A15-T3-25-9 [2]	PFPRV-1-A15-T3-25-0 [2]	150W
	6,173	Type IV	PFPRV-1-A15-T4-25 [2]	PFPRV-1-A15-T4-25-9 [2]	PFPRV-1-A15-T4-25-0 [2]	150W
	10,292	Type III	PFPRV-1-A25-T3-25 [2]	PFPRV-1-A25-T3-25-9 [2]	PFPRV-1-A25-T3-25-0 [2]	250W
	10,261	Type IV	PFPRV-1-A25-T4-25 [2]	PFPRV-1-A25-T4-25-9 [2]	PFPRV-1-A25-T4-25-0 [2]	250W
	15,203	Type III	PFPRV-1-A40-T3-25 [2]	PFPRV-1-A40-T3-25-9 [2]	PFPRV-1-A40-T3-25-0 [2]	400W
	15,157	Type IV	PFPRV-1-A40-T4-25 [2]	PFPRV-1-A40-T4-25-9 [2]	PFPRV-1-A40-T4-25-0 [2]	400W
	18,992	Type III	PFPRV-1-A60-T3-25 [2]	PFPRV-1-A60-T3-25-9 [2]	PFPRV-1-A60-T3-25-0 [2]	450W
	18,935	Type IV	PFPRV-1-A60-T4-25 [2]	PFPRV-1-A60-T4-25-9 [2]	PFPRV-1-A60-T4-25-0 [2]	450W
30'	6,192	Type III	PFPRV-1-A15-T3-30 [3]	PFPRV-1-A15-T3-30-9 [3]	PFPRV-1-A15-T3-30-0 [4]	150W
	6,173	Type IV	PFPRV-1-A15-T4-30 [3]	PFPRV-1-A15-T4-30-9 [3]	PFPRV-1-A15-T4-30-0 [4]	150W
	10,292	Type III	PFPRV-1-A25-T3-30 [3]	PFPRV-1-A25-T3-30-9 [3]	PFPRV-1-A25-T3-30-0 [4]	250W
	10,261	Type IV	PFPRV-1-A25-T4-30 [3]	PFPRV-1-A25-T4-30-9 [3]	PFPRV-1-A25-T4-30-0 [4]	250W
	15,203	Type III	PFPRV-1-A40-T3-30 [3]	PFPRV-1-A40-T3-30-9 [3]	PFPRV-1-A40-T3-30-0 [4]	400W
	15,157	Type IV	PFPRV-1-A40-T4-30 [3]	PFPRV-1-A40-T4-30-9 [3]	PFPRV-1-A40-T4-30-0 [4]	400W
	18,992	Type III	PFPRV-1-A60-T3-30 [3]	PFPRV-1-A60-T3-30-9 [3]	PFPRV-1-A60-T3-30-0 [4]	450W
	18,935	Type IV	PFPRV-1-A60-T4-30 [3]	PFPRV-1-A60-T4-30-9 [3]	PFPRV-1-A60-T4-30-0 [4]	450W

NOTES:

1. Customer is responsible for engineering analysis to confirm pole and fixture compatibility for all applications. Refer to installation instructions IB500002EN and pole white paper WP513001EN for additional support information.

2. Supplied with 4A Square Straight Steel Shaft (SSS), Anchor Bolts (AB1), Template (TMP1), hardware and base cover. 15' combo SS4A15SFM4, 20' combo SS4A20SFM4, and 25' combo SS4A25SFM4.

3. Supplied with 5A Square Straight Steel Shaft (SSS), Anchor Bolts (AB1), Template (TMP1), hardware and base cover. 30' combo SS5A30SFM4.

4. Supplied with 5M Square Straight Steel Shaft (SSS), Anchor Bolts (AB1), Template (TMP1), hardware and base cover. 30' combo SS5M30SFM4.

5. Refer to In Stock Guide for stocked configurations and availability.

TWO FIXTURE CONFIGURATION
(30FT CONFIGURATIONS WITH 80, 90, 100MPH WIND ZONES AND 25FT CONFIGURATIONS WITH 100MPH WIND ZONE USE 5" POLES)

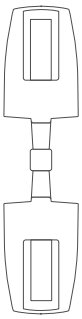

EPA=1.50

Mounting Height (Feet)	Lumens (Nominal)	Distribution	Maximum Wind Zone (MPH)			HID Equivalent (Wattage)
			80	90	100	
15'	6,192	Type III	PFPRV-2-A15-T3-15 [2]	PFPRV-2-A15-T3-15-9 [2]	PFPRV-2-A15-T3-15-0 [2]	150W
	6,173	Type IV	PFPRV-2-A15-T4-15 [2]	PFPRV-2-A15-T4-15-9 [2]	PFPRV-2-A15-T4-15-0 [2]	150W
	10,292	Type III	PFPRV-2-A25-T3-15 [2]	PFPRV-2-A25-T3-15-9 [2]	PFPRV-2-A25-T3-15-0 [2]	250W
	10,261	Type IV	PFPRV-2-A25-T4-15 [2]	PFPRV-2-A25-T4-15-9 [2]	PFPRV-2-A25-T4-15-0 [2]	250W
	15,203	Type III	PFPRV-2-A40-T3-15 [2]	PFPRV-2-A40-T3-15-9 [2]	PFPRV-2-A40-T3-15-0 [2]	400W
	15,157	Type IV	PFPRV-2-A40-T4-15 [2]	PFPRV-2-A40-T4-15-9 [2]	PFPRV-2-A40-T4-15-0 [2]	400W
	18,992	Type III	PFPRV-2-A60-T3-15 [2]	PFPRV-2-A60-T3-15-9 [2]	PFPRV-2-A60-T3-15-0 [2]	450W
	18,935	Type IV	PFPRV-2-A60-T4-15 [2]	PFPRV-2-A60-T4-15-9 [2]	PFPRV-2-A60-T4-15-0 [2]	450W
20'	6,192	Type III	PFPRV-2-A15-T3-20 [2]	PFPRV-2-A15-T3-20-9 [2]	PFPRV-2-A15-T3-20-0 [2]	150W
	6,173	Type IV	PFPRV-2-A15-T4-20 [2]	PFPRV-2-A15-T4-20-9 [2]	PFPRV-2-A15-T4-20-0 [2]	150W
	10,292	Type III	PFPRV-2-A25-T3-20 [2]	PFPRV-2-A25-T3-20-9 [2]	PFPRV-2-A25-T3-20-0 [2]	250W
	10,261	Type IV	PFPRV-2-A25-T4-20 [2]	PFPRV-2-A25-T4-20-9 [2]	PFPRV-2-A25-T4-20-0 [2]	250W
	15,203	Type III	PFPRV-2-A40-T3-20 [2]	PFPRV-2-A40-T3-20-9 [2]	PFPRV-2-A40-T3-20-0 [2]	400W
	15,157	Type IV	PFPRV-2-A40-T4-20 [2]	PFPRV-2-A40-T4-25-9 [2]	PFPRV-2-A40-T4-20-0 [2]	400W
	18,992	Type III	PFPRV-2-A60-T3-20 [2]	PFPRV-2-A60-T3-20-9 [2]	PFPRV-2-A60-T3-20-0 [2]	450W
	18,935	Type IV	PFPRV-2-A60-T4-20 [2]	PFPRV-2-A60-T4-20-9 [2]	PFPRV-2-A60-T4-20-0 [2]	450W
25'	6,192	Type III	PFPRV-2-A15-T3-25 [2]	PFPRV-2-A15-T3-25-9 [2]	PFPRV-2-A15-T3-25-0 [3]	150W
	6,173	Type IV	PFPRV-2-A15-T4-25 [2]	PFPRV-2-A15-T4-25-9 [2]	PFPRV-2-A15-T4-25-0 [3]	150W
	10,292	Type III	PFPRV-2-A25-T3-25 [2]	PFPRV-2-A25-T3-25-9 [2]	PFPRV-2-A25-T3-25-0 [3]	250W
	10,261	Type IV	PFPRV-2-A25-T4-25 [2]	PFPRV-2-A25-T4-25-9 [2]	PFPRV-2-A25-T4-25-0 [3]	250W
	15,203	Type III	PFPRV-2-A40-T3-25 [2]	PFPRV-2-A40-T3-25-9 [2]	PFPRV-2-A40-T3-25-0 [3]	400W
	15,157	Type IV	PFPRV-2-A40-T4-25 [2]	PFPRV-2-A40-T4-25-9 [2]	PFPRV-2-A40-T4-25-0 [3]	400W
	18,992	Type III	PFPRV-2-A60-T3-25 [2]	PFPRV-2-A60-T3-25-9 [2]	PFPRV-2-A60-T3-25-0 [3]	450W
	18,935	Type IV	PFPRV-2-A60-T4-25 [2]	PFPRV-2-A60-T4-25-9 [2]	PFPRV-2-A60-T4-25-0 [3]	450W
30'	6,192	Type III	PFPRV-2-A15-T3-30 [3]	PFPRV-2-A15-T3-30-9 [3]	PFPRV-2-A15-T3-30-0 [4]	150W
	6,173	Type IV	PFPRV-2-A15-T4-30 [3]	PFPRV-2-A15-T4-30-9 [3]	PFPRV-2-A15-T4-30-0 [4]	150W
	10,292	Type III	PFPRV-2-A25-T3-30 [3]	PFPRV-2-A25-T3-30-9 [3]	PFPRV-2-A25-T3-30-0 [4]	250W
	10,261	Type IV	PFPRV-2-A25-T4-30 [3]	PFPRV-2-A25-T4-30-9 [3]	PFPRV-2-A25-T4-30-0 [4]	250W
	15,203	Type III	PFPRV-2-A40-T3-30 [3]	PFPRV-2-A40-T3-30-9 [3]	PFPRV-2-A40-T3-30-0 [4]	400W
	15,157	Type IV	PFPRV-2-A40-T4-30 [3]	PFPRV-2-A40-T4-30-9 [3]	PFPRV-2-A40-T4-30-0 [4]	400W
	18,992	Type III	PFPRV-2-A60-T3-30 [3]	PFPRV-2-A60-T3-30-9 [3]	PFPRV-2-A60-T3-30-0 [4]	450W
	18,935	Type IV	PFPRV-2-A60-T4-30 [3]	PFPRV-2-A60-T4-30-9 [3]	PFPRV-2-A60-T4-30-0 [4]	450W

NOTES:

1. Customer is responsible for engineering analysis to confirm pole and fixture compatibility for all applications. Refer to installation instructions IB500002EN and pole white paper WP513001EN for additional support information.

2. Supplied with 4A Square Straight Steel Shaft (SSS), Anchor Bolts (AB1), Template (TMP1), hardware and base cover. 15' combo SS4A15SFM4, 20' combo SS4A20SFM4, and 25' combo SS4A25SFM4.

3. Supplied with 5A Square Straight Steel Shaft (SSS), Anchor Bolts (AB1), Template (TMP1), hardware and base cover. 25' combo SS5A25SFM4 and 30' combo SS5A30SFM4.

4. Supplied with 5M Square Straight Steel Shaft (SSS), Anchor Bolts (AB1), Template (TMP1), hardware and base cover. 30' combo SS5M30SFM4.

5. Refer to In Stock Guide for stocked configurations and availability.

THREE FIXTURE CONFIGURATION
(30FT CONFIGURATIONS WITH 80, 90, 100MPH WIND ZONES AND 25FT CONFIGURATIONS WITH 90, 100MPH WIND ZONE USE 5" POLES)

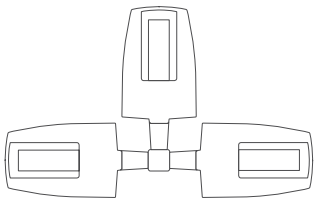

EPA=2.25

Mounting Height (Feet)	Lumens (Nominal)	Distribution	Maximum Wind Zone (MPH)			HID Equivalent (Wattage)
			80	90	100	
15'	6,192	Type III	PFPRV-3-A15-T3-15 [2]	PFPRV-3-A15-T3-15-9 [2]	PFPRV-3-A15-T3-15-0 [2]	150W
	6,173	Type IV	PFPRV-3-A15-T4-15 [2]	PFPRV-3-A15-T4-15-9 [2]	PFPRV-3-A15-T4-15-0 [2]	150W
	10,292	Type III	PFPRV-3-A25-T3-15 [2]	PFPRV-3-A25-T3-15-9 [2]	PFPRV-3-A25-T3-15-0 [2]	250W
	10,261	Type IV	PFPRV-3-A25-T4-15 [2]	PFPRV-3-A25-T4-15-9 [2]	PFPRV-3-A25-T4-15-0 [2]	250W
	15,203	Type III	PFPRV-3-A40-T3-15 [2]	PFPRV-3-A40-T3-15-9 [2]	PFPRV-3-A40-T3-15-0 [2]	400W
	15,157	Type IV	PFPRV-3-A40-T4-15 [2]	PFPRV-3-A40-T4-15-9 [2]	PFPRV-3-A40-T4-15-0 [2]	400W
	18,992	Type III	PFPRV-3-A60-T3-15 [2]	PFPRV-3-A60-T3-15-9 [2]	PFPRV-3-A60-T3-15-0 [2]	450W
	18,935	Type IV	PFPRV-3-A60-T4-15 [2]	PFPRV-3-A60-T4-15-9 [2]	PFPRV-3-A60-T4-15-0 [2]	450W
20'	6,192	Type III	PFPRV-3-A15-T3-20 [2]	PFPRV-3-A15-T3-20-9 [2]	PFPRV-3-A15-T3-20-0 [2]	150W
	6,173	Type IV	PFPRV-3-A15-T4-20 [2]	PFPRV-3-A15-T4-20-9 [2]	PFPRV-3-A15-T4-20-0 [2]	150W
	10,292	Type III	PFPRV-3-A25-T3-20 [2]	PFPRV-3-A25-T3-20-9 [2]	PFPRV-3-A25-T3-20-0 [2]	250W
	10,261	Type IV	PFPRV-3-A25-T4-20 [2]	PFPRV-3-A25-T4-20-9 [2]	PFPRV-3-A25-T4-20-0 [2]	250W
	15,203	Type III	PFPRV-3-A40-T3-20 [2]	PFPRV-3-A40-T3-20-9 [2]	PFPRV-3-A40-T3-20-0 [2]	400W
	15,157	Type IV	PFPRV-3-A40-T4-20 [2]	PFPRV-3-A40-T4-25-9 [2]	PFPRV-3-A40-T4-20-0 [2]	400W
	18,992	Type III	PFPRV-3-A60-T3-20 [2]	PFPRV-3-A60-T3-20-9 [2]	PFPRV-3-A60-T3-20-0 [2]	450W
	18,935	Type IV	PFPRV-3-A60-T4-20 [2]	PFPRV-3-A60-T4-20-9 [2]	PFPRV-3-A60-T4-20-0 [2]	450W
25'	6,192	Type III	PFPRV-3-A15-T3-25 [2]	PFPRV-3-A15-T3-25-9 [3]	PFPRV-3-A15-T3-25-0 [3]	150W
	6,173	Type IV	PFPRV-3-A15-T4-25 [2]	PFPRV-3-A15-T4-25-9 [3]	PFPRV-3-A15-T4-25-0 [3]	150W
	10,292	Type III	PFPRV-3-A25-T3-25 [2]	PFPRV-3-A25-T3-25-9 [3]	PFPRV-3-A25-T3-25-0 [3]	250W
	10,261	Type IV	PFPRV-3-A25-T4-25 [2]	PFPRV-3-A25-T4-25-9 [3]	PFPRV-3-A25-T4-25-0 [3]	250W
	15,203	Type III	PFPRV-3-A40-T3-25 [2]	PFPRV-3-A40-T3-25-9 [3]	PFPRV-3-A40-T3-25-0 [3]	400W
	15,157	Type IV	PFPRV-3-A40-T4-25 [2]	PFPRV-3-A40-T4-25-9 [3]	PFPRV-3-A40-T4-25-0 [3]	400W
	18,992	Type III	PFPRV-3-A60-T3-25 [2]	PFPRV-3-A60-T3-25-9 [3]	PFPRV-3-A60-T3-25-0 [3]	450W
	18,935	Type IV	PFPRV-3-A60-T4-25 [2]	PFPRV-3-A60-T4-25-9 [3]	PFPRV-3-A60-T4-25-0 [3]	450W
30'	6,192	Type III	PFPRV-3-A15-T3-30 [3]	PFPRV-3-A15-T3-30-9 [4]	PFPRV-3-A15-T3-30-0 [4]	150W
	6,173	Type IV	PFPRV-3-A15-T4-30 [3]	PFPRV-3-A15-T4-30-9 [4]	PFPRV-3-A15-T4-30-0 [4]	150W
	10,292	Type III	PFPRV-3-A25-T3-30 [3]	PFPRV-3-A25-T3-30-9 [4]	PFPRV-3-A25-T3-30-0 [4]	250W
	10,261	Type IV	PFPRV-3-A25-T4-30 [3]	PFPRV-3-A25-T4-30-9 [4]	PFPRV-3-A25-T4-30-0 [4]	250W
	15,203	Type III	PFPRV-3-A40-T3-30 [3]	PFPRV-3-A40-T3-30-9 [4]	PFPRV-3-A40-T3-30-0 [4]	400W
	15,157	Type IV	PFPRV-3-A40-T4-30 [3]	PFPRV-3-A40-T4-30-9 [4]	PFPRV-3-A40-T4-30-0 [4]	400W
	18,992	Type III	PFPRV-3-A60-T3-30 [3]	PFPRV-3-A60-T3-30-9 [4]	PFPRV-3-A60-T3-30-0 [4]	450W
	18,935	Type IV	PFPRV-3-A60-T4-30 [3]	PFPRV-3-A60-T4-30-9 [4]	PFPRV-3-A60-T4-30-0 [4]	450W

NOTES:

1. Customer is responsible for engineering analysis to confirm pole and fixture compatibility for all applications. Refer to installation instructions IB500002EN and pole white paper WP513001EN for additional support information.

2. Supplied with 4A Square Straight Steel Shaft (SSS), Anchor Bolts (AB1), Template (TMP1), hardware and base cover. 15' combo SS4A15SFM4, 20' combo SS4A20SFM4, and 25' combo SS4A25SFM4.

3. Supplied with 5A Square Straight Steel Shaft (SSS), Anchor Bolts (AB1), Template (TMP1), hardware and base cover. 25' combo SS5A25SFM4 and 30' combo SS5A30SFM4.

4. Supplied with 5M Square Straight Steel Shaft (SSS), Anchor Bolts (AB1), Template (TMP1), hardware and base cover. 30' combo SS5M30SFM4.

5. Refer to In Stock Guide for availability.

FOUR FIXTURE CONFIGURATION
(30FT CONFIGURATIONS WITH 80, 90, 100MPH WIND ZONES AND 25FT CONFIGURATIONS WITH 100MPH WIND ZONE USE 5" POLES)

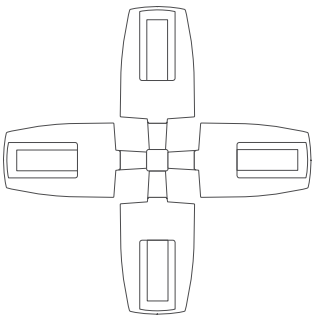

EPA=3.00

Mounting Height (Feet)	Lumens (Nominal)	Distribution	Maximum Wind Zone (MPH)			HID Equivalent (Wattage)
			80	90	100	
15'	6,192	Type III	PFPRV-4-A15-T3-15 [2]	PFPRV-4-A15-T3-15-9 [2]	PFPRV-4-A15-T3-15-0 [2]	150W
	6,173	Type IV	PFPRV-4-A15-T4-15 [2]	PFPRV-4-A15-T4-15-9 [2]	PFPRV-4-A15-T4-15-0 [2]	150W
	10,292	Type III	PFPRV-4-A25-T3-15 [2]	PFPRV-4-A25-T3-15-9 [2]	PFPRV-4-A25-T3-15-0 [2]	250W
	10,261	Type IV	PFPRV-4-A25-T4-15 [2]	PFPRV-4-A25-T4-15-9 [2]	PFPRV-4-A25-T4-15-0 [2]	250W
	15,203	Type III	PFPRV-4-A40-T3-15 [2]	PFPRV-4-A40-T3-15-9 [2]	PFPRV-4-A40-T3-15-0 [2]	400W
	15,157	Type IV	PFPRV-4-A40-T4-15 [2]	PFPRV-4-A40-T4-15-9 [2]	PFPRV-4-A40-T4-15-0 [2]	400W
	18,992	Type III	PFPRV-4-A60-T3-15 [2]	PFPRV-4-A60-T3-15-9 [2]	PFPRV-4-A60-T3-15-0 [2]	450W
	18,935	Type IV	PFPRV-4-A60-T4-15 [2]	PFPRV-4-A60-T4-15-9 [2]	PFPRV-4-A60-T4-15-0 [2]	450W
20'	6,192	Type III	PFPRV-4-A15-T3-20 [2]	PFPRV-4-A15-T3-20-9 [2]	PFPRV-4-A15-T3-20-0 [2]	150W
	6,173	Type IV	PFPRV-4-A15-T4-20 [2]	PFPRV-4-A15-T4-20-9 [2]	PFPRV-4-A15-T4-20-0 [2]	150W
	10,292	Type III	PFPRV-4-A25-T3-20 [2]	PFPRV-4-A25-T3-20-9 [2]	PFPRV-4-A25-T3-20-0 [2]	250W
	10,261	Type IV	PFPRV-4-A25-T4-20 [2]	PFPRV-4-A25-T4-20-9 [2]	PFPRV-4-A25-T4-20-0 [2]	250W
	15,203	Type III	PFPRV-4-A40-T3-20 [2]	PFPRV-4-A40-T3-20-9 [2]	PFPRV-4-A40-T3-20-0 [2]	400W
	15,157	Type IV	PFPRV-4-A40-T4-20 [2]	PFPRV-4-A40-T4-25-9 [2]	PFPRV-4-A40-T4-20-0 [2]	400W
	18,992	Type III	PFPRV-4-A60-T3-20 [2]	PFPRV-4-A60-T3-20-9 [2]	PFPRV-4-A60-T3-20-0 [2]	450W
	18,935	Type IV	PFPRV-4-A60-T4-20 [2]	PFPRV-4-A60-T4-20-9 [2]	PFPRV-4-A60-T4-20-0 [2]	450W
25'	6,192	Type III	PFPRV-4-A15-T3-25 [2]	PFPRV-4-A15-T3-25-9 [3]	PFPRV-4-A15-T3-25-0 [3]	150W
	6,173	Type IV	PFPRV-4-A15-T4-25 [2]	PFPRV-4-A15-T4-25-9 [3]	PFPRV-4-A15-T4-25-0 [3]	150W
	10,292	Type III	PFPRV-4-A25-T3-25 [2]	PFPRV-4-A25-T3-25-9 [3]	PFPRV-4-A25-T3-25-0 [3]	250W
	10,261	Type IV	PFPRV-4-A25-T4-25 [2]	PFPRV-4-A25-T4-25-9 [3]	PFPRV-4-A25-T4-25-0 [3]	250W
	15,203	Type III	PFPRV-4-A40-T3-25 [2]	PFPRV-4-A40-T3-25-9 [3]	PFPRV-4-A40-T3-25-0 [3]	400W
	15,157	Type IV	PFPRV-4-A40-T4-25 [2]	PFPRV-4-A40-T4-25-9 [3]	PFPRV-4-A40-T4-25-0 [3]	400W
	18,992	Type III	PFPRV-4-A60-T3-25 [2]	PFPRV-4-A60-T3-25-9 [3]	PFPRV-4-A60-T3-25-0 [3]	450W
	18,935	Type IV	PFPRV-4-A60-T4-25 [2]	PFPRV-4-A60-T4-25-9 [3]	PFPRV-4-A60-T4-25-0 [3]	450W
30'	6,192	Type III	PFPRV-4-A15-T3-30 [3]	PFPRV-4-A15-T3-30-9 [4]	PFPRV-4-A15-T3-30-0 [4]	150W
	6,173	Type IV	PFPRV-4-A15-T4-30 [3]	PFPRV-4-A15-T4-30-9 [4]	PFPRV-4-A15-T4-30-0 [4]	150W
	10,292	Type III	PFPRV-4-A25-T3-30 [3]	PFPRV-4-A25-T3-30-9 [4]	PFPRV-4-A25-T3-30-0 [4]	250W
	10,261	Type IV	PFPRV-4-A25-T4-30 [3]	PFPRV-4-A25-T4-30-9 [4]	PFPRV-4-A25-T4-30-0 [4]	250W
	15,203	Type III	PFPRV-4-A40-T3-30 [3]	PFPRV-4-A40-T3-30-9 [4]	PFPRV-4-A40-T3-30-0 [4]	400W
	15,157	Type IV	PFPRV-4-A40-T4-30 [3]	PFPRV-4-A40-T4-30-9 [4]	PFPRV-4-A40-T4-30-0 [4]	400W
	18,992	Type III	PFPRV-4-A60-T3-30 [3]	PFPRV-4-A60-T3-30-9 [4]	PFPRV-4-A60-T3-30-0 [4]	450W
	18,935	Type IV	PFPRV-4-A60-T4-30 [3]	PFPRV-4-A60-T4-30-9 [4]	PFPRV-4-A60-T4-30-0 [4]	450W

NOTES:

1. Customer is responsible for engineering analysis to confirm pole and fixture compatibility for all applications. Refer to installation instructions IB500002EN and pole white paper WP513001EN for additional support information.

2. Supplied with 4A Square Straight Steel Shaft (SSS), Anchor Bolts (AB1), Template (TMP1), hardware and base cover. 15' combo SS4A15SFM4, 20' combo SS4A20SFM4, and 25' combo SS4A25SFM4.

3. Supplied with 5A Square Straight Steel Shaft (SSS), Anchor Bolts (AB1), Template (TMP1), hardware and base cover. 25' combo SS5A25SFM4 and 30' combo SS5A30SFM4.

4. Supplied with 5M Square Straight Steel Shaft (SSS), Anchor Bolts (AB1), Template (TMP1), hardware and base cover. 30' combo SS5M30SFM4.

5. Refer to In Stock Guide for availability.

All primary Structure painted;
Primer - Red - only.

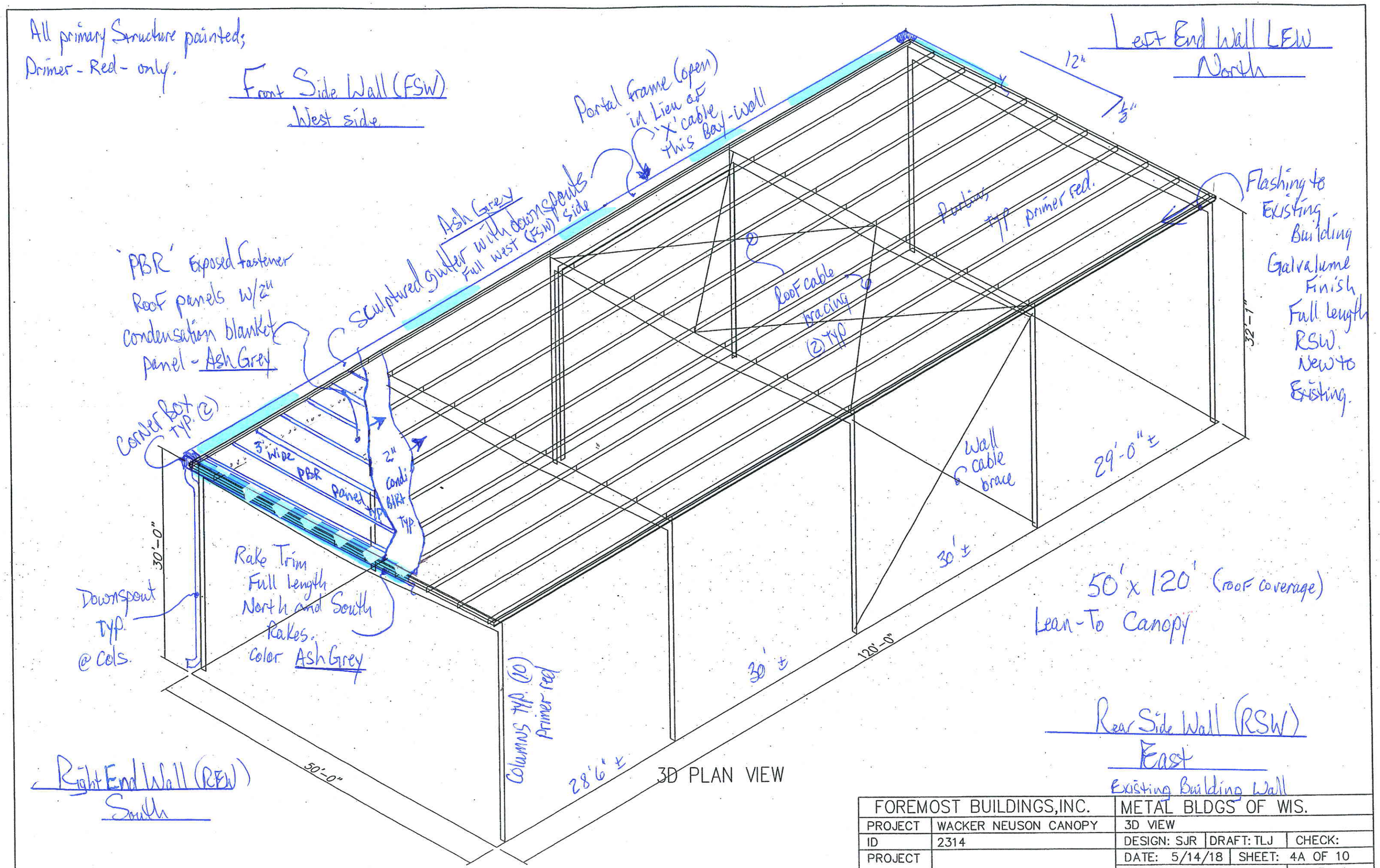

FOREMOST BUILDINGS, INC.		METAL BLDGS OF WIS.		
PROJECT	WACKER NEUSON CANOPY	3D VIEW		
ID	2314	DESIGN: SJR	DRAFT: TLJ	CHECK:
PROJECT		DATE: 5/14/18	SHEET: 4A OF 10	
ADDRESS	GERMANTOWN, WI	DO NOT SCALE DRAWING	ISSUE: 1	

COLOR CHART

COMMERCIAL/INDUSTRIAL

- ***Final color selection should be made from actual color chips.***
- For the most current information available, visit our website at **www.mbci.com**.
- See product selection chart for gauge and color availability.
- All products available in smooth or embossed finish.
- Trim available in all colors.
- A 40-year limited paint warranty is available upon written request for all colors except for Crimson Red, Polar White and Brite Red. Please review our sample warranty for complete performance attributes and terms and conditions.

SIGNATURE® 200

STANDARD COLORS
26-GAUGE MATERIAL

Siliconized Polyester
Polar White is a Straight Polyester.

* Also available in 29-gauge

HAWAIIAN BLUE * SR .32 SRI 35	CRIMSON RED * SR .33 SRI 34	FERN GREEN * SR .28 SRI 29	BURNISHED SLATE * SR .28 SRI 29	POLAR WHITE* * SR .58 SRI 69
ASH GRAY * SR .48 SRI 56	SADDLE TAN * SR .48 SRI 56	DESERT SAND * SR .42 SRI 48	KOKO BROWN * SR .28 SRI 30	SOLAR WHITE** * SR .74 SRI 91
CHARCOAL GRAY * SR .28 SRI 30	COBALT BLUE * SR .28 SRI 27	RUSTIC RED * SR .36 SRI 40	LIGHT STONE * SR .50 SRI 58	

SIGNATURE® 300

STANDARD COLORS
26-GAUGE MATERIAL
PBR, PBU, PBA, PBC, PBD
PANELS ONLY

KYNAR 500®, HYLAR 5000®, Low Gloss

* Also available in 24-gauge

MEDIUM BRONZE* * SR .33 SRI 36	SNOW WHITE* * SR .65 SRI 79	SLATE GRAY * SR .37 SRI 41	ALMOND* * SR .63 SRI 76	BONE WHITE** * SR .70 SRI 85
CLASSIC GREEN* * SR .28 SRI 30	BROWNSTONE* * SR .47 SRI 54	BRITE RED * SR .49 SRI 55	HARBOR BLUE * SR .28 SRI 30	

** Minimum quantities and/or extended lead times may be required. Please inquire.

Signature® is a registered trademark of NCI Group, Inc. KYNAR 500® is a registered trademark of Arkema, Inc. HYLAR 5000® is a registered trademark of Solvay Solexis.

FOREMOST BUILDINGS, INC.

Foremost Buildings, Inc.
895 North Parkway | Jefferson WI 53549
Phone: 920.674.6746 | Fax: 920.674.9888
www.foremostbuildings.com

ENERGY STAR PARTNER

* ENERGY STAR® Qualified

SOLAR REFLECTIVITY (SR)?

Solar reflectivity or reflectance (SR) is the ability of a material to reflect solar energy from its surface back into the atmosphere. The SR value is a number from 0 to 1.0. A value of 0 indicates that the material absorbs all solar energy and a value of 1.0 indicates it is all reflected. Energy Star requires SR testing of both new and aged roof products. New products must have an SR value of 0.25 or higher for steep slope (above 2:12) roofing and an SR value of 0.65 or higher for low slope (2:12 or less) roofing. Aged testing takes 3 years to complete, so not all products that meet the initial requirements are qualified. For more information, please go to **www.energystar.gov**.

SOLAR REFLECTANCE INDEX (SRI)?

The SRI is used to determine compliance with LEED requirements and is calculated according to ASTM E 1980 using values for reflectance and emissivity. Emissivity is a material's ability to release absorbed energy. To meet LEED requirements, a roofing material must have an SRI of 29 or higher for steep slope (above 2:12) roofing and an SRI value of 78 or higher for low slope (2:12 or less) roofing. For more information, please go to **www.usgbc.org**.

PANEL PROFILE	Panel	29 GAUGE		26 GAUGE		24 GAUGE		22 GAUGE	
		Galvalume Plus	Sig 200	Galvalume Plus	Sig 200	Galvalume Plus	Sig 200	Galvalume Plus	Sig 200
12" / 36" / 1¼" "PBR" PANEL	PBR	●	■	●	■	■	■	■	■
6" / 36" / ¾" "PBU" PANEL	PBU	●	■	●	■	■	■	■	■
2.67" / 32" / ⅞" "PBC" PANEL	PBC	●	■	●	■	■	■	■	■
2.67" / 32" / ⅝" "PBD" PANEL	PBD	●	■	●	■	■	■	■	■
7.2" / 36" / 1½" 7.2 PANEL	7.2	●	■	●	●	●	■	●	■
12" / 36" / 1⅛" "PBA" PANEL	PBA	●	■	●	■	■	■	■	■

● Available in any quantity ■ May require minimum quantity

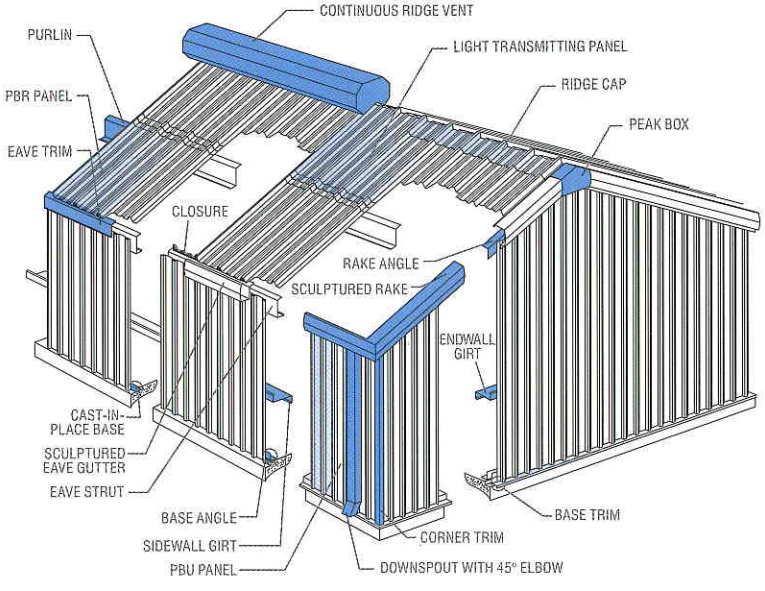

AVAILABLE ACCESSORIES

- Hat and Channel Sections
- Light Transmitting Panels
- Vents
- Roof Jacks
- Fasteners
- Ridge Caps
- Closures
- Doors
- Windows
- Sealants
- Insulation
- Bracing
- Bolts
- Louvers
- Sliding Door Hardware

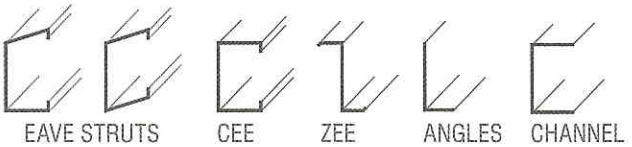

For complete performance specifications, product limitations and disclaimers, please consult MBCI's Paint and Galvalume Plus® warranties. Upon receipt of payment in full, these warranties are available upon request for all painted or Galvalume Plus®, prime products. Sample copies can be found at **www.mbci.com** or contact your local MBCI Sales Representative.

SITE

TOTAL AREA	-	17.536 AC (763,868 S.F.)
PERVIOUS AREA (45.61%)	-	7.998 AC (348,388 S.F.)
IMPERVIOUS AREA (52.63%)	-	9.230 AC (402,083 S.F.)
WET POND AREA (1.76%)	-	0.308 AC (13,397 S.F.)

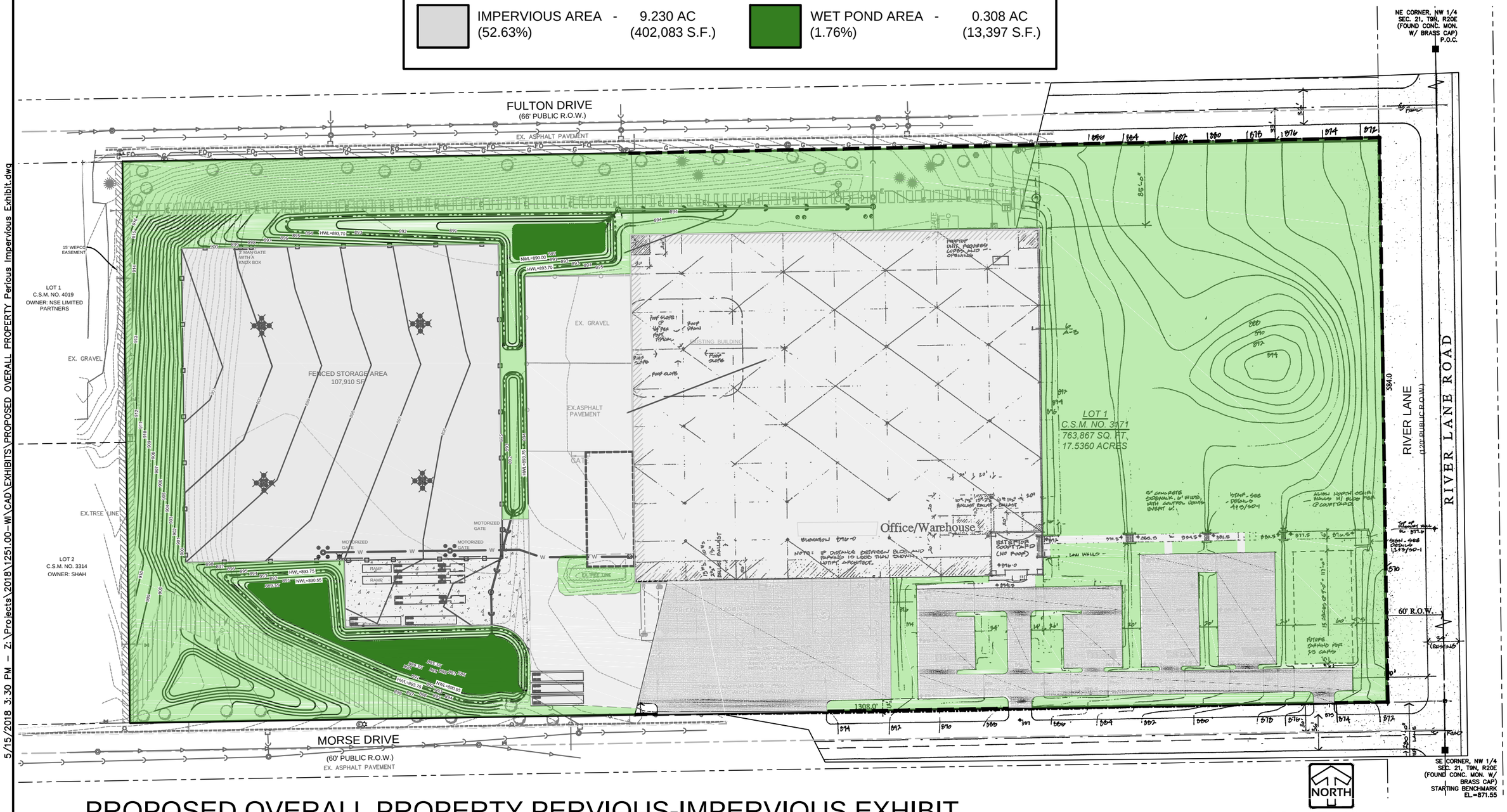

5/15/2018 3:30 PM – Z:\Projects\2018\1251.00-WI\CAD\EXHIBITS\PROPOSED OVERALL PROPERTY Perious Impervious Exhibit.dwg

PROPOSED OVERALL PROPERTY PERVIOUS-IMPERVIOUS EXHIBIT

SCALE: 1"=100'

WACKER NEUSON - GERMANTOWN - STORAGE EXPANSION AREA

JOB NO. 1251.00-WI 5/09/18

PINNACLE ENGINEERING GROUP

1051 E. MAIN STREET | SUITE 217 | EAST DUNDEE, IL 60118 | WWW.PINNACLE-ENGR.COM | CHICAGO@PINNACLE-ENGR.COM

PLAN | DESIGN | DELIVER

Project: Wacker Neuson - North Basin
Project No.: 1251.00-WI
Date: 5/11/2018

TRAPEZOIDAL WEIR SIZING

SIZING IS BASED ON THE FOLLOWING EQUATION:

$$Q = \left[K \times 2/3 \times L \times (2g)^{0.5} \times H^{1.5}\right] + \frac{1}{2}\left[K \times 8/15 \times (2g)^{0.5} \times S_1 \times H^{2.5}\right] + \frac{1}{2}\left[K \times 8/15 \times (2g)^{0.5} \times S_2 \times H^{2.5}\right]$$

Where:
Q = FLOW (cfs)
K = WEIR COEFFICIENT
L = WEIR LENGTH (ft.)
H = HEAD (ft.)
g = 32.2 ft/sec
S_1 = LEFT SIDE SLOPE
S_2 = RIGHT SIDE SLOPE

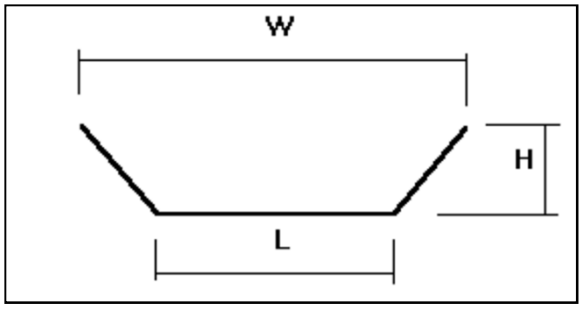

WEIR DATA

WEIR COEFFICIENT K (<1) - 0.50
WEIR LENGTH L (ft.) - 7.00
WEIR ELEVATION (ft.) - 893.80
LEFT SIDE SLOPE (H:V) (ft.) - 10.00 : 1
RIGHT SIDE SLOPE (H:V) (ft.) - 4.00 : 1

RATING TABLE

WATER ELEVATION * (ft.)	HEAD (ft.)	Q (cfs)
893.80	0.00	0.000
893.85	0.05	0.218
893.90	0.10	0.640
893.95	0.15	1.218
894.00	0.20	1.943
894.05	0.25	2.809
894.10	0.30	3.815
894.15	0.35	4.963
894.20	0.40	6.253
894.25	0.45	7.687
894.30	0.50	9.268
894.35	0.55	10.998
894.40	0.60	12.880
894.45	0.65	14.915

* Water elevation must be higher than weir elevation

Project: Wacker Neuson - South Basin
Project No.: 1251.00-WI
Date: 5/11/2018

TRAPEZOIDAL WEIR SIZING

SIZING IS BASED ON THE FOLLOWING EQUATION:

$$Q = \left[K \times 2/3 \times L \times (2g)^{0.5} \times H^{1.5}\right] + \frac{1}{2}\left[K \times 8/15 \times (2g)^{0.5} \times S_1 \times H^{2.5}\right] + \frac{1}{2}\left[K \times 8/15 \times (2g)^{0.5} \times S_2 \times H^{2.5}\right]$$

Where:
Q = FLOW (cfs)
K = WEIR COEFFICIENT
L = WEIR LENGTH (ft.)
H = HEAD (ft.)
g = 32.2 ft/sec
S_1 = LEFT SIDE SLOPE
S_2 = RIGHT SIDE SLOPE

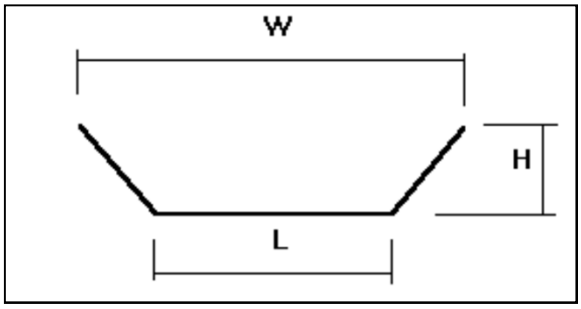

WEIR DATA

WEIR COEFFICIENT K (<1) -	0.50	
WEIR LENGTH L (ft.) -	0.00	
WEIR ELEVATION (ft.) -	894.80	
LEFT SIDE SLOPE (H:V) (ft.) -	1025.00	: 1
RIGHT SIDE SLOPE (H:V) (ft.) -	157.00	: 1

RATING TABLE

WATER ELEVATION * (ft.)	HEAD (ft.)	Q (cfs)
894.80	0.00	0.000
894.81	0.01	0.013
894.82	0.02	0.072
894.83	0.03	0.197
894.84	0.04	0.405
894.85	0.05	0.707
894.86	0.06	1.115
894.87	0.07	1.640
894.88	0.08	2.289
894.89	0.09	3.073
894.90	0.10	3.999
894.91	0.11	5.076
894.92	0.12	6.309
894.93	0.13	7.707

* Water elevation must be higher than weir elevation

CONCEPTUAL AERIAL RENDERING FOR:

WACKER NEUSON - STORAGE EXPANSION

GERMANTOWN, WISCONSIN

MHC

WACKER NEUSON

HARRIS ARCHITECTS, INC.

WWW.HARRISARCHITECTS.COM 847.303.1155

SITE PLAN REVIEW

6/11/18 Plan Commission Meeting

Keller Inc. / Armour Coatings Inc.

Village Planner Report **Germantown, Wisconsin**

Summary

Scott Lausten, Keller Inc., agent for Armour Equipment Leasing LLC, property owner and Armour Coatings Inc., is seeking approval of site development & building plans for a 1,665 sqft building addition, loading dock addition and access and parking lot improvements for the existing facility located at N113 W18950 Carnegie Drive in the Germantown Industrial Park.

Location: N113 W18950 Carnegie Drive

Applicant/ Owner:

Scott Lausten Keller Inc. Germantown, WI	Armour Equipment Leasing LLC N113 W18950 Carnegie Drive Germantown WI

Current Zoning: M-1: Limited Industrial

Adjacent Land Uses		Zoning
North	Industrial	M-1
South	Industrial	M-1
East	Industrial	M-1
West	Industrial	M-1

Background/Proposal

Scott Lausten, Keller Inc., agent for Armour Equipment Leasing LLC, property owner and Armour Coatings Inc., is seeking approval of site development & building plans for a 1,665 sqft building addition, loading dock addition and access and parking lot improvements for the existing facility located at N113 W18950 Carnegie Drive in the Germantown Industrial Park.

The subject parcel is 3.69 acres in area with an existing 42,485 sqft industrial building. As presented in the site plans, the proposed 1,665 sqft addition (for a total building area of 44,149 sqft) and site improvements include the following features:

- 100 sqft office addition
- 1,565 sqft maintenance shop addition w/ (2) new man doors
- Pre-cast concrete wall panels w/ scored CMU texture to match existing building
- One (1) additional elevated loading dock w/ new concrete retaining wall
- Parking lot re-grading, asphalt replacement and re-striping w/ expanded 30' wide driveway @ Carnegie Drive

Access to the expanded facility will remain the same with one (1) access driveway on Carnegie Drive. Approximately 22 parking stalls exist on the property; no new parking stalls are proposed although the entire parking area will be re-paved and re-striped with adequate space for additional stalls if needed.

As a result of the proposed building expansion, no net increase in impervious surfaces is expected given that the addition will be located on/over existing impervious area (parking lot). Storm water run-off from the site will continue to be directed via existing swales and parking lot grading to the west property line and then south to the existing storm sewer in Carnegie Drive. While the existing sanitary sewer currently serve the building will remain unchanged, a new 6" water line is proposed to service a new fire sprinkler system to be installed in the facility.

No new landscaping or signage is proposed. Additional exterior lighting is proposed and comprised of one (1) 26W LED wall-mounted cut-off fixtures mounted on the building addition at the west elevation above the new man-door.

Staff Comments

The zoning for this parcel in the Industrial Park is M-1: Limited Industrial. Subject to the staff recommended conditions herein, the proposed development plans comply with the M-1: Limited Industrial Zoning district regulations.

While unrelated to the proposed addition and site improvements, staff is concerned with the excessive amount of what appears to be abandoned trucks, trailers, boars and other vehicles, equipment and overall junk located within the fenced area on the north side of the property. The owner is advised to clean up the area consistent with the Village's property maintenance code requirements. Village staff will follow-up with the owner at the time a building permit application is submitted.

Fire Department/Police Department
The Fire Department is recommending approval with the understanding that because the building has an “F1” Occupancy Class, a fire sprinkler system is required as part of the project. The Police Department is requesting that all doors and docks be numbered with reflective numbers to aid emergency personnel access.

Engineering/Public Works
The Village Engineer is recommending conditional approval but has identified a few issues that will need to be addressed prior to issuance of a building permit (see copy of June 7, 2018 memo from Village Engineer, Eric Nitschke). Issues include: rebuilding the sanitary sampling manhole, installation of a new 6” water line to serve the fire sprinkler system, and concerns with the expanded driveway location and encroachment to an existing street light and sewer inlet.

Inspection Services
Inspection Services has indicated that state-approved plans will be required prior to issuing a building permit along with the required $20,000 occupancy bond.

Village Planner Recommendation

APPROVE the site development & building plans for the 1,665 sqft building addition, loading dock and site improvements to the existing Armour Coatings Inc. facility located at N113 W18950 Carnegie Drive in the Germantown Industrial Park subject to the following conditions:

1. This approval is subject to all the conditions and requirements set forth herein and adopted by the Plan Commission. Approval is granted for the site development and building plans dated April 10, 2018 (architectural plans) and June 5, 2018 (engineering) unless superseded by subsequent plan sheets approved by the Village Planner pursuant to revisions required herein and/or by the Plan Commission.
2. All landscaping, screening, grading, and paving improvements shown on the approved site plans shall be installed as proposed prior to issuance of an occupancy permit unless a cash bond or letter of credit in an amount equal to 120 percent of the estimated installation and material costs reviewed and approved by the Village is submitted to the Village as necessary to ensure that installation of the proposed features and improvements will be completed within one (1) year after issuance of the occupancy permit.
3. All exterior doors shall be clearly marked with reflective 5” or larger letters/numbers to aid emergency personnel access as required by the Police Department.
4. All issues identified by the Village Engineer in the June 7, 2018 review memo shall be addressed prior to issuance of a building permit.
5. State approved plans and a $20,000 occupancy bond are required by the Building Inspection Department as part of the building permit application.
6. Installation of a fire sprinkler system is required. Owner shall coordinate the plan review, installation and inspection with the Fire Department and Inspection Services.

Engineering Department Memorandum

To : Larry Ratayczak, Public Works Director

From : Eric Nitschke, Village Engineer

Date : June 7, 2018

Re :Development Review for June 11 Plan Commission

Larry,

Included you will find the review comments pertaining to the Plan Commission Agenda on June 11, 2018 from myself and staff for the following:

Armour Coatings, N113 W18950 Carnegie Drive – Site Review and Bldg Addition

1. Sanitary comments
    a. Rebuild sample manhole from the cone up per current Village detail and standards. Include manhole detail on the plan.

2. Water comments for the site plan-See attached PDF with comments on Utility Plan sheet C-5 of C-6 and comments below:
    a. The 6" water lateral for fire protection would not be an issue with the Water Utility. Since this a private line all the Utility is concerned with is the tap at the main. The materials used fall within our water main spec. section #6.
    b. We would request that the valve location be GPS'ed for placement into our GIS. It will be GIS marked as private fire line.
    c. The Village requires an inspector on site for the live tap. Please contact the Engineering Department to schedule the live tap.

3. Highway comments
    a. The existing street light is located too close to the proposed access driveway and will need to be relocated. The new location is to be determined. A site visit with staff and the owner is recommended.
    b. The existing inlet just west of the driveway needs closer attention. Drawing C-103 shows the proposed flare of the driveway encroaching on the inlet's curb head. Depending on the flare of the proposed drive a different frame and grate maybe necessary. A detail of that area should be included. DPW will look at current condition of inlet.

4. Engineering comments
    a. Staff concurs with the Highway Department regarding the existing light.
    b. Silt fence may not be necessary on the west side of the property.
    c. There may be some erosion control concerns, in the easement and at the inlet to the storm sewer system, that need to be addressed with this proposal.
    d. Staff would like to meet onsite with the owner or owner's representative to discuss erosion control, driveway configuration and drainage easement needs. Following the site meeting, staff would anticipate a final set of plans and details would be submitted for review and approval.

It is recommended the project receive conditional Plan Commission approval, and that the owner work with staff to address the comments listed herein.

Village of Germantown ...Willkommen

Fee must accompany application

- ☒ $700 Minor Addition
- ☐ $1,240 Construction <10,000 SF
- ☐ $2,095 Construction 10,000 SF to 50,000
- ☐ $3,460 Industrial Construction >50,000 SF
- ☐ $3,460 Commercial Construction >50,000
- ☐ $200 Plan Commission Consultation
- ☐ $125 Fire Department Plan Review

PAID _____ DATE _____

SITE PLAN REVIEW APPLICATION

Pursuant to Section 17.43 of the Municipal Code

Please read and complete this application carefully. **All applications must be signed and dated.**

1 APPLICANT OR AGENT

Keller, Inc
Scott Lausten
W204 N11509 Goldendale Rd
Germantown, WI 53022

Phone (262) 250-9710
E-Mail slausten@kellerbuilds.com

PROPERTY OWNER

Armour Coatings Inc
Kevin Kelnhofer
N113W18950 Carnegie Dr.
Germantown, WI 53022

Phone (262) 502-1600
E-Mail kevink@armourcoatings.com

PROPERTY ADDRESS

N113W18950 Carnegie Dr.
Germantown, WI 53022

3 NEIGHBORING USES – Specify name and type of use, e.g. Enviro Tech – Industrial, Smith – Residential, etc.

North	South	East	West
Price Transport Inc Warehousing	Phoenix Metal Industrial/Manufacturing	Vulcan Industries Industrial/Manufacturing	Great Lake Packaging - Industrial/Manufacturing

4 READ AND INITIAL THE FOLLOWING:

SPL I am aware of the Village of Germantown ordinance requiring fire sprinklers in most new construction.

SPL I understand that all new development is subject to Impact and/or Connection Fees that must be paid before building permits will be issued.

SPL I understand that an incomplete application will be withdrawn from the Plan Commission agenda and that all resubmissions to the Plan Commission are subject to a new application fee.

5 SIGNATURES – ALL APPLICATION MUST BE SIGNED BY OWNER!

Scott Lausten 5/3/18
Applicant Date

[signature] 5/3/18
Owner Date

Keller
Planners | Architects | Builders
With Offices in the Fox Cities, Madison, Milwaukee & Wausau

Project: Armour Coatings
Address: N113 W18950 Carnegie Dr.
Project Description: 1,665 Sq. Ft. Addition
Contact: Scott Lausten, Keller Inc.

Dear Plan Commission Members,

Please find with this submittal packet for you to review the Preliminary Plans and Civil Plans for the proposed addition to Armour Coatings located at N113 W18950 Carnegie Drive. The proposed addition will be a total of 1,665 sq. ft.

Armour Coatings is in need of valuable floor space. In an effort to grab more floor space inside the existing building, they will be expanding on the southwest side of the existing building. This addition will be approximately 1,665 sq. ft. The addition will consist of one new office and a new maintenance shop. The height of the building will match the existing. Storm water will be sheet drained to the existing ditch. The façade of the addition will be "scored" CMU veneer to match the existing building.

In addition, Armour Coatings will be adding an additional loading dock next to the (2) existing loading dock doors. Per the new grading plan, the existing parking lot will be regraded in areas needed to install a new loading dock and allow for trucks to easily back up into all docks. All other asphalt in the parking lot will be replaced with new and restriped as needed. In an effort to allow easier access to the Armour Coatings parking lot, we will also expand the width their entrance, per the civil plan.

Thank you for your time in reviewing our plans for Armour Coatings. If you have any questions or comments please let me know and I will be happy to assist you.

RECEIVED
MAY 07 2018
OFFICE OF THE VILLAGE PLANNER
VILLAGE OF GERMANTOWN

Sincerely,
Scott Lausten
Design/Project Manager / Co-Owner
KELLER, INC.
Planners | Architects | Builders
Mobile (262) 825-6163 | Office (262) 250-9710

ARMOUR COATINGS

GERMANTOWN, WISCONSIN

Keller
Planners | Architects | Builders
Offices in the Fox Cities, Madison, Milwaukee and Warsaw

CONCEPT ONLY

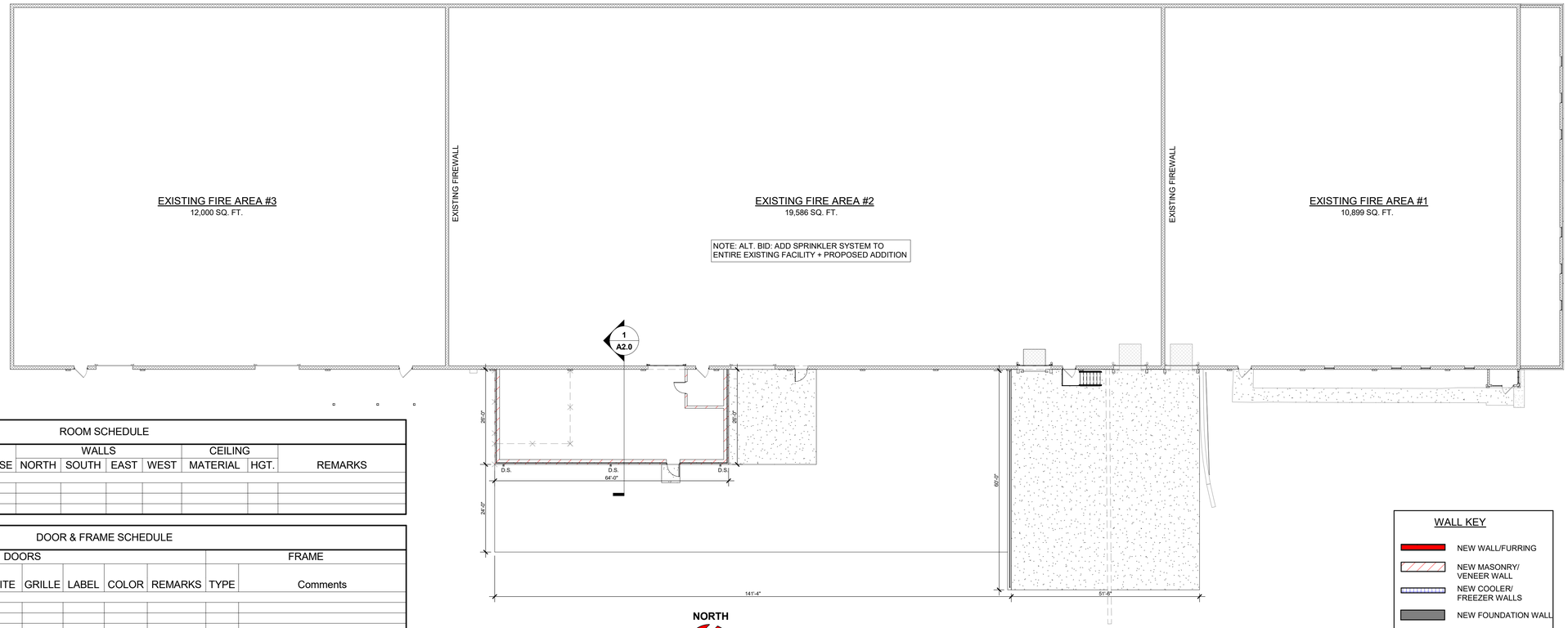

NORTH

OVERALL FLOOR PLAN

1/16" = 1'-0"

ROOM SCHEDULE										
				WALLS				CEILING		
RM#	ROOM NAME	FLOOR	BASE	NORTH	SOUTH	EAST	WEST	MATERIAL	HGT.	REMARKS
100	NEW OFFICE									
101	NEW MAINTENANCE SHOP									
102	EXISTING FIRE AREA #2									

DOOR & FRAME SCHEDULE											
	DOORS									FRAME	
	SIZE										
#	W	H	TYPE	MAT.	LITE	GRILLE	LABEL	COLOR	REMARKS	TYPE	Comments
	3' - 0"	7' - 0"									
100	3' - 0"	7' - 0"									
101A	3' - 4"	7' - 0"									
101B	10' - 0"	12' - 0"									
102A	3' - 4"	7' - 0"									
102B	9' - 0"	10' - 0"									

WALL KEY
NEW WALL/FURRING
NEW MASONRY/ VENEER WALL
NEW COOLER/ FREEZER WALLS
NEW FOUNDATION WALL
TYPICAL EXISTING WALL
DEMO WALLS
FIRE WALL OR FIRE BARRIER

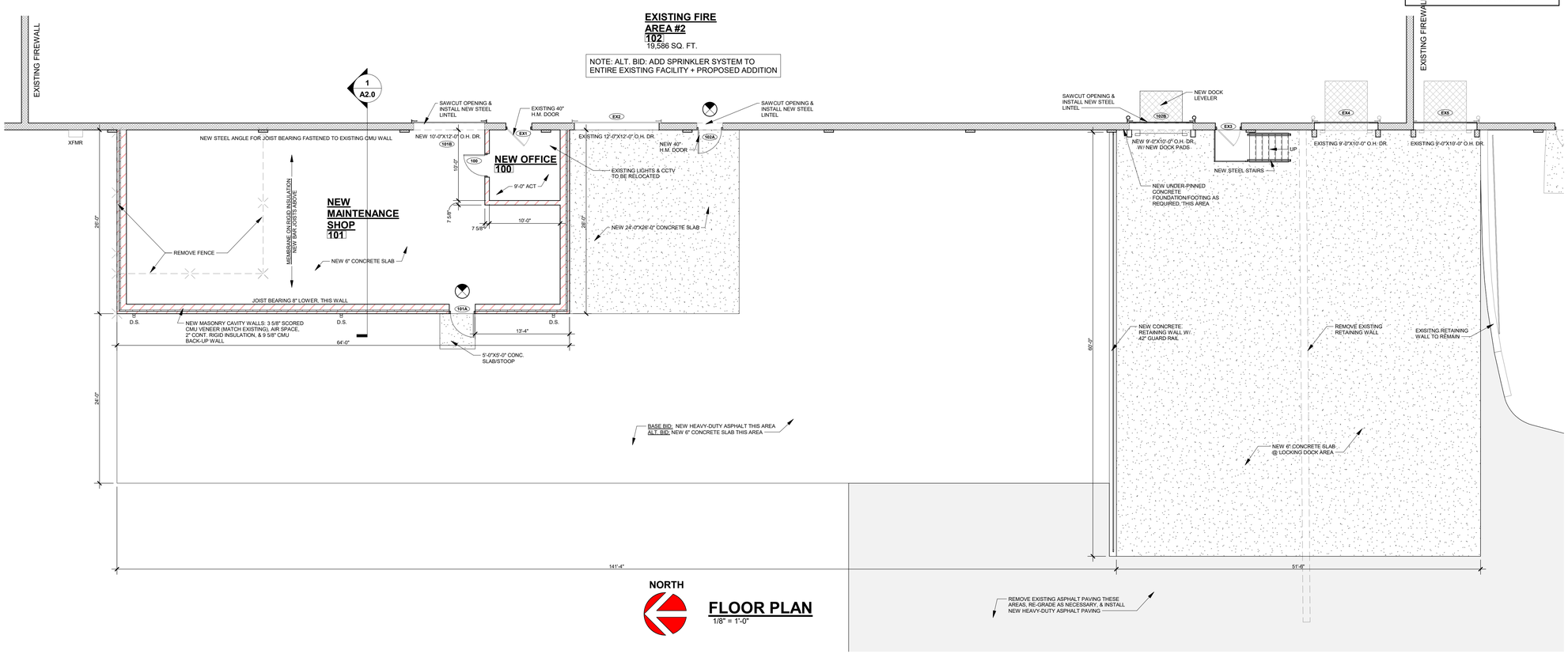

NORTH

FLOOR PLAN

1/8" = 1'-0"

Keller
PLANNERS | ARCHITECTS | BUILDERS

FOX CITIES
N216 State Road 55
P.O. Box 620
Kaukauna, WI 54130
PHONE (920) 766-5795 / 1-800-236-2534
FAX (920) 766-5004

MADISON
711 Lois Dr.
Sun Prairie, WI 53590
PHONE (608) 318-2336
FAX (608) 318-2337

MILWAUKEE
W204 N11509
Goldendale Rd
Germantown, WI 53022
PHONE (262) 250-9710
1-800-236-2534
FAX (262) 250-9740

WAUSAU
5605 Lilac Ave
Wausau, WI 54401
PHONE (715) 849-3141
FAX (715) 849-3181

www.kellerbuilds.com

PROPOSED FOR:

ARMOUR COATINGS

GERMANTOWN, WISCONSIN

"COPYRIGHT NOTICE"
This design, drawing and detail is the copyrighted property of KELLER, INC. No part hereof shall be copied, duplicated, distributed, disclosed or made available to anyone without the expressed written consent of KELLER, INC.

PRELIMINARY - NOT FOR CONSTRUCTION

REVISIONS
R1 04.27.2018 TDP

PROJECT MANAGER: S. LAUSTEN
DESIGNER: C. MANSKE
DRAWN BY: TDP
EXPEDITOR: -------
SUPERVISOR: -------
PRELIMINARY NO: P18093
CONTRACT NO: -------
DATE: 04.10.2018
SHEET: A1.0

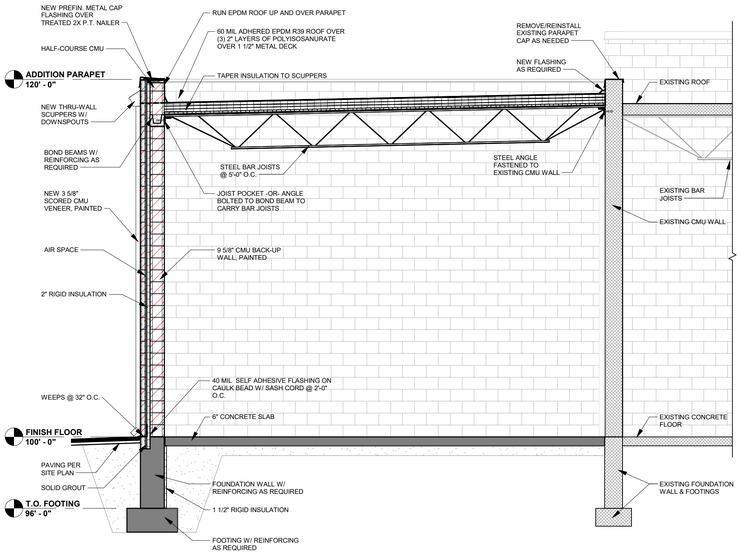

1 A2.0 **CROSS SECTION**
1/4" = 1'-0"

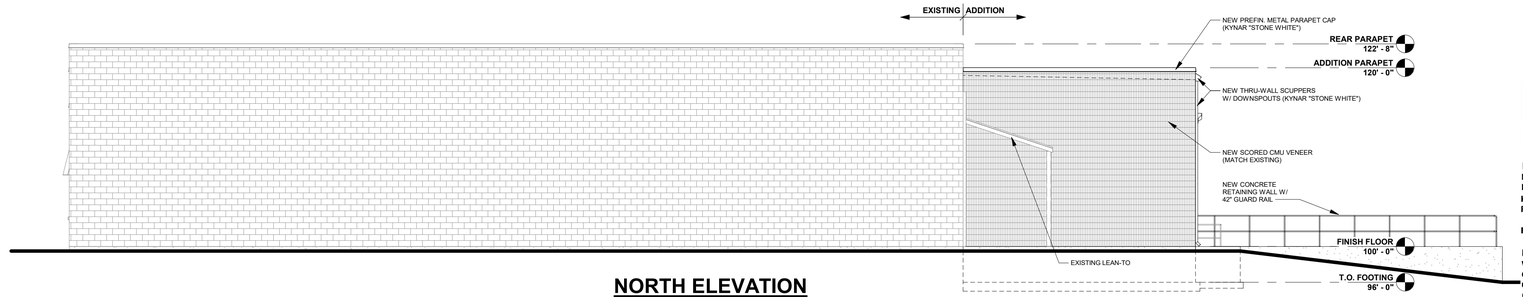

NORTH ELEVATION
1/8" = 1'-0"

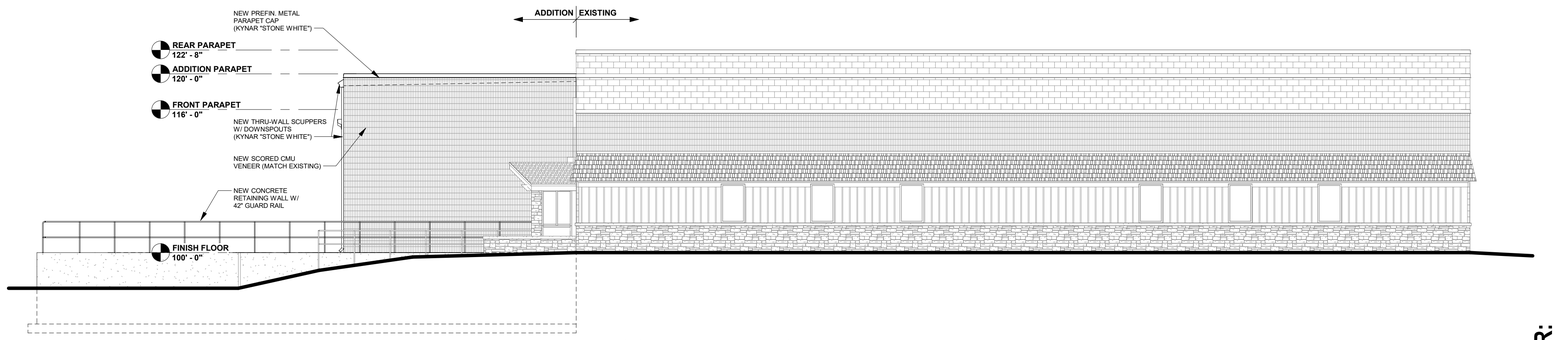

SOUTH ELEVATION
1/8" = 1'-0"

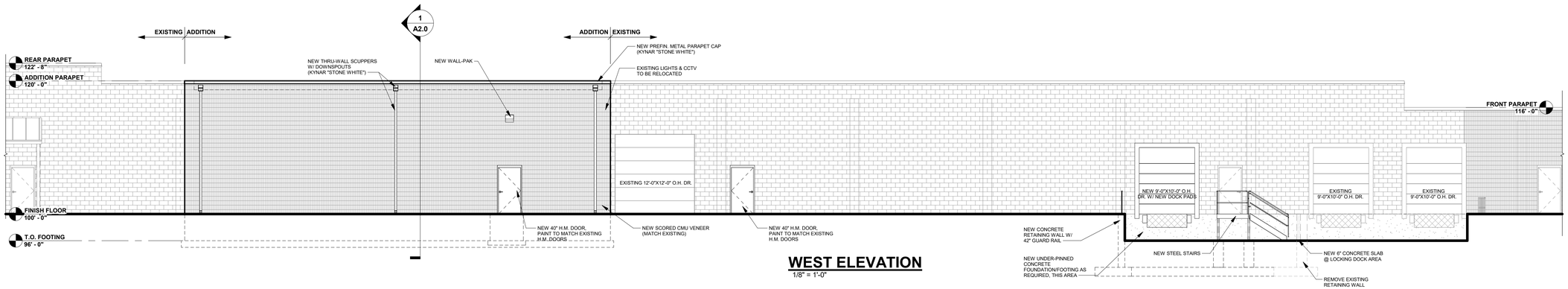

WEST ELEVATION
1/8" = 1'-0"

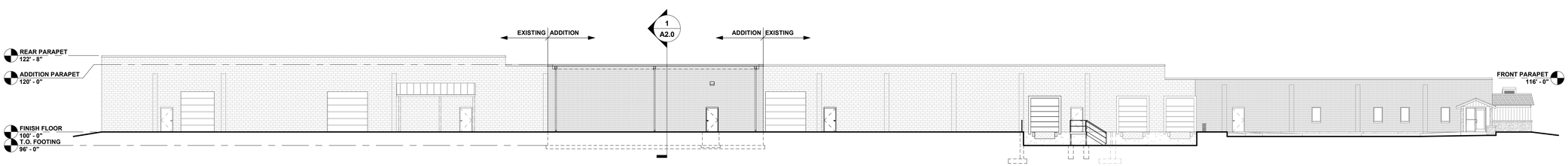

OVERALL WEST ELEVATION
1/16" = 1'-0"

Keller
PLANNERS | ARCHITECTS | BUILDERS

FOX CITIES
N216 State Road 55
P.O. Box 620
Kaukauna, WI 54130
PHONE (920) 766-5795 / 1-800-236-2534
FAX (920) 766-5004

MADISON
711 Lois Dr.
Sun Prairie, WI 53590
PHONE (608) 318-2336
FAX (608) 318-2337

MILWAUKEE
W204 N11509
Goldendale Rd
Germantown, WI 53022
PHONE (262) 250-9710 1-800-236-2534
FAX (262) 250-9740

WAUSAU
5605 Lilac Ave
Wausau, WI 54401
PHONE (715) 849-3141
FAX (715) 849-3181

www.kellerbuilds.com

PROPOSED FOR:
ARMOUR COATINGS
GERMANTOWN, WISCONSIN

"COPYRIGHT NOTICE"
This design, drawing and detail is the copyrighted property of KELLER, INC. No part hereof shall be copied, duplicated, distributed, disclosed or made available to anyone without the expressed written consent of KELLER, INC.

REVISIONS
R1 04.27.2018 TDP

PROJECT MANAGER: S. LAUSTEN
DESIGNER: C. MANSKE
DRAWN BY: TDP
EXPEDITOR: -------
SUPERVISOR: -------
PRELIMINARY NO: P18093
CONTRACT NO: -------
DATE: 04.10.2018
SHEET: A2.0

PRELIMINARY - NOT FOR CONSTRUCTION

QUAM ENGINEERING, LLC 1519 E Washington St, Suite A, West Bend, WI 53095 (262) 338-6641

\KS-23-18\ KS23BASE.DWG

C-1
RADIUS=183'
ARC=76.03'
CHORD LENGTH=75.48'
CHORD BEARING=S 75°10'01"
DELTA=23°48'11"

ARMOUR COATINGS – GERMANTOWN WI
EXISTING CONDITIONS PLAN
DATED: JUNE 6, 2018

C-101

QUAM ENGINEERING, LLC
Residential and Commercial Site Design Consultants
1519 E Washington Street, Suite A; West Bend, Wisconsin 53095
Phone (262) 338-6641; www.quamengineering.com

QUAM ENGINEERING, LLC 1519 E Washington St, Suite A, West Bend, WI 53095 (262) 338-6641

\KS-23-18\ KS23BASE.DWG

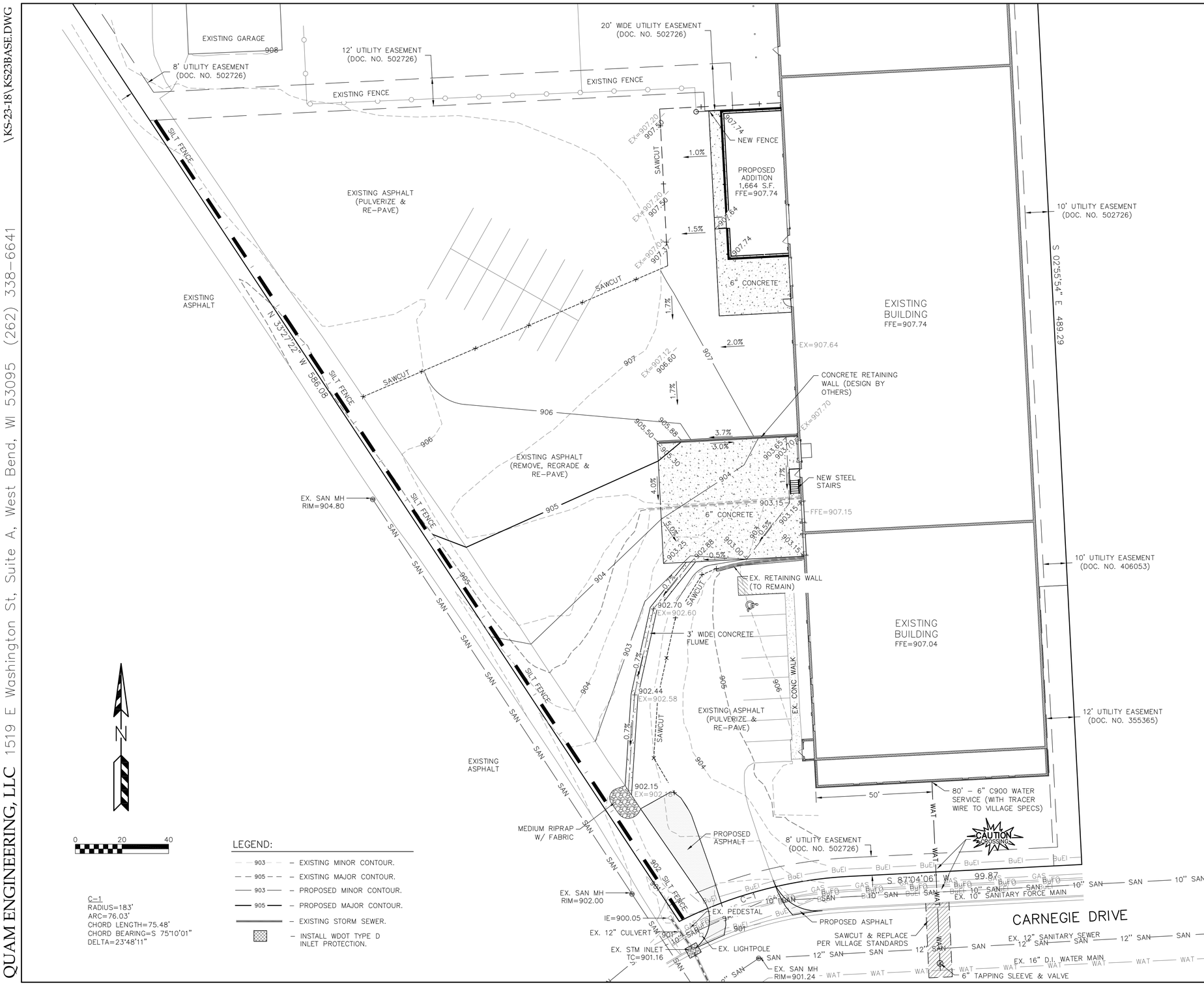

C-1
RADIUS=183'
ARC=76.03'
CHORD LENGTH=75.48'
CHORD BEARING=S 75°10'01"
DELTA=23°48'11"

LEGEND:

- 903 – EXISTING MINOR CONTOUR.
- 905 – EXISTING MAJOR CONTOUR.
- 903 – PROPOSED MINOR CONTOUR.
- 905 – PROPOSED MAJOR CONTOUR.
- EXISTING STORM SEWER.
- INSTALL WDOT TYPE D INLET PROTECTION.

EROSION NOTES:

THE EXISTING ASPHALT WILL ACT AS THE STONE TRACKING PAD DURING CONSTRUCTION. THE TRACKING PAD IS TO BE MAINTAINED BY THE CONTRACTOR IN A CONDITION, WHICH WILL PREVENT THE TRACK OF MUD OR DRY SEDIMENT ONTO THE ADJACENT PUBLIC STREETS. SEDIMENT REACHING THE PUBLIC ROAD SHALL BE REMOVED BY STREET CLEANING (NOT HYDRAULIC FLUSHING) BEFORE THE END OF EACH WORKDAY.

SOIL STOCKPILES SHALL BE LOCATED A MINIMUM OF 75 FEET FROM LAKES, STREAMS, WETLANDS, DITCHES, DRAINAGE WAYS, CURBS AND GUTTERS OR OTHER STORMWATER CONVEYANCE SYSTEM, UNLESS OTHERWISE APPROVED BY THE ENGINEER. MEASURES SHALL BE TAKEN TO MINIMIZE EROSION AND RUNOFF FROM ANY SOIL STOCKPILES THAT WILL LIKELY REMAIN FOR MORE THAN FIVE WORKING DAYS. ANY STOCKPILE THAT REMAINS FOR MORE THAN 30 DAYS SHALL BE COVERED OR TREATED WITH STABILIZATION PRACTICES SUCH AS TEMPORARY OR PERMANENT SEEDING AND MULCHING.

EROSION CONTROL DEVICES SHALL BE INSTALLED PRIOR TO GRADING OPERATIONS AND SHALL BE PROPERLY MAINTAINED FOR MAXIMUM EFFECTIVENESS UNTIL VEGETATION IS ESTABLISHED. ALL EROSION CONTROL MEASURES AND STRUCTURES SERVING THE SITE MUST BE INSPECTED AT LEAST WEEKLY OR WITHIN 24 HOURS OF A 0.5 INCH RAIN EVENT. ALL MAINTENANCE WILL FOLLOW AN INSPECTION WITHIN 24 HOURS.

CUT AND FILL SLOPES SHALL BE NO GREATER THAN 3:1.

EROSION CONTROL IS THE RESPONSIBILITY OF THE CONTRACTOR UNTIL ACCEPTANCE OF THIS PROJECT. EROSION CONTROL MEASURES AS SHOWN SHALL BE THE MINIMUM PRECAUTIONS THAT WILL BE ALLOWED. THE CONTRACTOR SHALL BE RESPONSIBLE FOR RECOGNIZING AND CORRECTING ALL EROSION CONTROL PROBLEMS THAT ARE A RESULT OF CONSTRUCTION ACTIVITIES. ADDITIONAL EROSION CONTROL MEASURES, AS REQUESTED IN WRITING BY THE STATE OR LOCAL INSPECTORS, OR THE DEVELOPER'S ENGINEER, SHALL BE INSTALLED WITHIN 24 HOURS.

ALL DISTURBED SLOPES OF 4:1 OR GREATER AND DRAINAGE SWALES SHALL BE STABILIZED WITH CURLEX EROSION CONTROL FABRIC (INSTALL PER MANUFACTURER'S SPECIFICATIONS).

TIME SCHEDULE:

JULY 15, 2018	INSTALL INITIAL EROSION CONTROL DEVICES.
JULY 16 – SEPTEMBER 1, 2018	CONSTRUCT PROPOSED BUILDING ADDITION AND REGRADE PARKING LOT AND RE-PAVE.
SEPTEMBER 2 –15, 2018	COMPLETE FINAL LANDSCAPING AND RESTORE ALL PERVIOUS DISTURBED AREAS.

RESTORATION NOTES:

ALL DISTURBED AREAS, EXCEPT STREET PAVEMENT AND SIDEWALK AREAS, SHALL RECEIVE A MINIMUM OF FOUR (4) INCHES OF TOPSOIL, FERTILIZER, SEED AND MULCH. RESTORATION WILL OCCUR AS SOON AFTER THE DISTURBANCE AS PRACTICAL. LAWN AREAS WITH SLOPES GREATER THAN 4:1 SHALL BE SEEDED WITH OLDS "NOMOW" MIX OR EQUAL. ALL OTHER DISTURBED AREAS SHALL BE SEEDED WITH MADISON PARKS MIX OR EQUAL. MIXTURES SHALL BE IN ACCORDANCE WITH SECTION 630 OF D.O.T. SPECIFICATIONS.

AN EQUAL AMOUNT OF ANNUAL RYEGRASS SHALL BE ADDED TO THE MIX. SEED MIXTURES SHALL BE APPLIED AT THE RATE OF FOUR (4) POUNDS PER 1,000 SQUARE FEET. FERTILIZER SHALL BE APPLIED AT THE RATE OF FOUR (4) POUNDS PER 1,000 SQUARE FEET. FERTILIZER SHALL MEET THE MINIMUM REQUIREMENTS THAT FOLLOW: NITROGEN, NOT LESS THAN 16%; PHOSPHORIC ACID, NOT LESS THAN 6%; POTASH, NOT LESS THAN 6%.

ALL FINISH GRADED AREAS SHALL BE SEEDED AND MULCHED BY SEPTEMBER 15TH. IF THE SITE DOES NOT HAVE FINISH GRADED AREAS COMPLETED BY OCTOBER 15TH, ALL DISTURBED AREAS SHALL BE RESTORED WITH TEMPORARY SEEDING (COVER CROP). AREAS NEEDING PROTECTION DURING PERIODS WHEN PERMANENT SEEDING IS NOT APPLIED SHALL BE SEEDED WITH ANNUAL SPECIES FOR TEMPORARY PROTECTION. SEE TABLE 1 OF THE WISCONSIN DNR CONSERVATION PRACTICE STANDARD 1059, FOR SEEDING RATES OF COMMONLY USED SPECIES. THE RESIDUE FROM THIS CROP MAY EITHER BE INCORPORATED INTO THE SOIL DURING SEEDBED PREPARATION AT THE NEXT PERMANENT SEEDING PERIOD OR LEFT ON THE SOIL SURFACE AND THE PLANTING MADE AS A NO-TILL SEEDING.

THE CONTRACTOR SHALL BE RESPONSIBLE FOR A SATISFACTORY STAND OF GRASS ON ALL SEEDED AREAS FOR ONE YEAR AFTER THE PROJECT'S FINAL ACCEPTANCE.

OWNER:
ARMOUR COATINGS, INC
N113W18950 CARNEGIE DRIVE
GERMANTOWN, WI 53022

ENGINEER:
QUAM ENGINEERING, LLC
ATTN: KEVIN PARISH
1519 E. WASHINGTON ST, SUITE A
WEST BEND, WI 53095

SILT FENCE INSTALLATION SHALL CONFORM TO WISCONSIN DNR TECHNICAL STANDARD #1056)

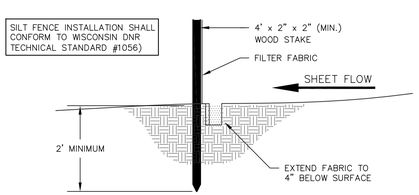

SILT FENCE CONSTRUCTION

TO OBTAIN LOCATION OF PARTICIPANTS' UNDERGROUND FACILITIES BEFORE YOU DIG IN WISCONSIN

CALL DIGGERS HOTLINE
1-800-242-8511
TOLL FREE
TDD(FOR THE HEARING IMPAIRED)(800)542-2289

WIS. STATUTE 182.0175 (1974) REQUIRES MIN. OF 3 WORK DAYS NOTICE BEFORE YOU EXCAVATE

ARMOUR COATINGS – GERMANTOWN WI
GRADING AND EROSION CONTROL PLAN
DATED: JUNE 6, 2018

C-103

QUAM ENGINEERING, LLC
Residential and Commercial Site Design Consultants
1519 E Washington Street, Suite A; West Bend, Wisconsin 53095
Phone (262) 338-6641; www.quamengineering.com

QUAM ENGINEERING, LLC 1519 E Washington St, Suite A, West Bend, WI 53095 (262) 338-6641

\KS-23-18\ KS23BASE.DWG

C-1
RADIUS=183'
ARC=76.03'
CHORD LENGTH=75.48'
CHORD BEARING=S 75°10'01"
DELTA=23°48'11"

SITE INFORMATION BLOCK

Site Address N113 W18950 CARNEGIE DRIVE

Site acreage (total) 3.69 ACRES

Legal Description:

Zoning: M-1

Setbacks and Lot Coverage:

Front Yard: 30 feet
Side Yards: 10 feet
Rear Yard: 25 feet
Percentage of coverage, including parking and building: 80%

Building Area:	44,161 s.f. – 27.5%
Other Impervious Area:	78,783 s.f. – 49.0%
Total Impervious Area:	122,944 s.f. – 76.5%
Pervious Area:	37,792 s.f. – 23.5%
Total Site Area:	160,736 s.f. – 100.0%
Existing Parking stalls:	22

Proposed Parking stalls:

	SHOWN
Car	21
Accessible	1
Total	22

ALL STRIPPING FOR PARKING STALLS, NO PARKING AREAS AND HANDICAP SYMBOLS SHALL BE 4" WIDE AND YELLOW.

ARMOUR COATINGS – GERMANTOWN WI
PROPOSED SITE PLAN
DATED: JUNE 6, 2018

C-102

QUAM ENGINEERING, LLC
Residential and Commercial Site Design Consultants
1519 E Washington Street, Suite A; West Bend, Wisconsin 53095
Phone (262) 338-6641; www.quamengineering.com

Lumark

DESCRIPTION

The patented Lumark Crosstour™ LED Wall Pack Series of luminaries provides an architectural style with super bright, energy efficient LEDs. The low-profile, rugged die-cast aluminum construction, universal back box, stainless steel hardware along with a sealed and gasketed optical compartment make the Crosstour impervious to contaminants. The Crosstour wall luminaire is ideal for wall/surface, inverted mount for façade/canopy illumination, post/bollard, site lighting, floodlight and low level pathway illumination including stairs. Typical applications include building entrances, multi-use facilities, apartment buildings, institutions, schools, stairways and loading docks test.

Catalog #		**Type**
Project		
Comments		**Date**
Prepared by		

SPECIFICATION FEATURES

Construction
Slim, low-profile LED design with rugged one-piece, die-cast aluminum hinged removable door and back box. Matching housing styles incorporate both a small and medium design. The small housing is available in 12W, 18W and 26W. The medium housing is available in the 38W model. Patented secure lock hinge feature allows for safe and easy tool-less electrical connections with the supplied push-in connectors. Back box includes three half-inch, NPT threaded conduit entry points. The universal back box supports both the small and medium forms and mounts to standard 3-1/2" to 4" round and octagonal, 4" square, single gang and masonry junction boxes. Key hole gasket allows for adaptation to junction box or wall. External fin design extracts heat from the fixture surface. One-piece silicone gasket seals door and back box. Minimum 5" wide pole for site lighting application. Not recommended for car wash applications.

Optical
Silicone sealed optical LED chamber incorporates a custom engineered mirrored anodized reflector providing high-efficiency illumination. Optical assembly includes impact-resistant tempered glass and meets IESNA requirements for full cutoff compliance. Available in seven lumen packages; 5000K, 4000K and 3000K CCT.

Electrical
LED driver is mounted to the die-cast housing for optimal heat sinking. LED thermal management system incorporates both conduction and natural convection to transfer heat rapidly away from the LED source. 12W, 18W, 26W and 38W series operate in -40°C to 40°C [-40°F to 104°F]. High ambient 50°C models available. Crosstour luminaires maintain greater than 89% of initial light output after 72,000 hours of operation. Three half-inch NPT threaded conduit entry points allow for thru-branch wiring. Back box is an authorized electrical wiring compartment. Integral LED electronic driver incorporates surge protection. 120-277V 50/60Hz or 347V 60Hz models.

Finish
Crosstour is protected with a Super durable TGIC carbon bronze or summit white polyester powder coat paint. Super durable TGIC powder coat paint finishes withstand extreme climate conditions while providing optimal color and gloss retention of the installed life.

Warranty
Five-year warranty.

XTOR
CROSSTOUR LED

APPLICATIONS:
WALL / SURFACE
POST / BOLLARD
LOW LEVEL
FLOODLIGHT
INVERTED
SITE LIGHTING

DIMENSIONS

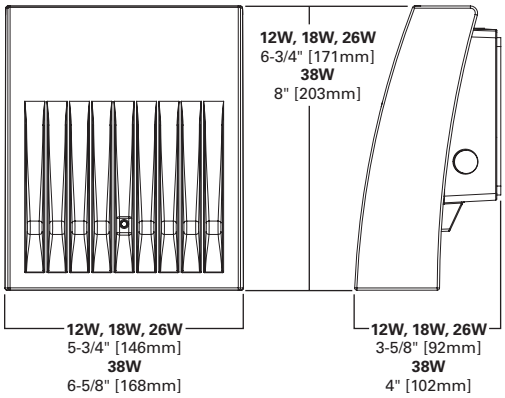

ESCUTCHEON PLATES

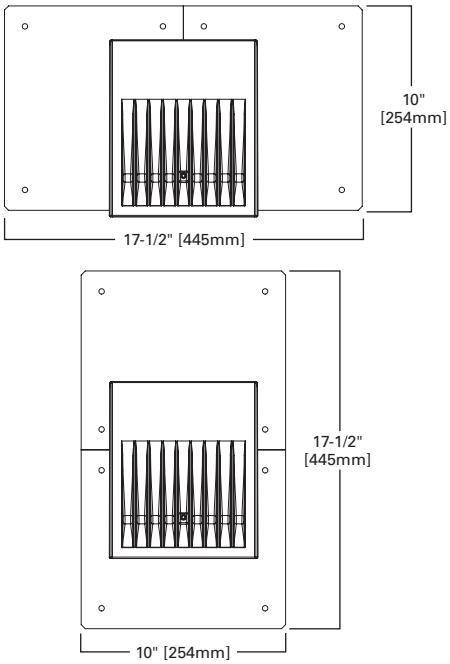

CERTIFICATION DATA
UL/cUL Wet Location Listed
LM79 / LM80 Compliant
ROHS Compliant
ADA Compliant
NOM Compliant Models
IP66 Ingressed Protection Rated
Title 24 Compliant
DesignLights Consortium® Qualified*

TECHNICAL DATA
40°C Maximum Ambient Temperature
External Supply Wiring 90°C Minimum

EPA
Effective Projected Area (Sq. Ft.):
XTOR1B, XT0R2B, XT0R3B=0.34
XTOR4B=0.45

SHIPPING DATA:
Approximate Net Weight:
3.7 – 5.25 lbs. [1.7 – 2.4 kgs.]

EATON
Powering Business Worldwide

*www.designlights.org

POWER AND LUMENS BY FIXTURE MODEL

LED Information	XTOR1B	XTOR1B-W	XTOR1B-Y	XTOR2B	XTOR2B-W	XTOR2B-Y	XTOR3B	XTOR3B-W	XTOR3B-Y	XTOR4B	XTOR4B-W	XTOR4B-Y
Delivered Lumens (Wall Mount)	1,418	1,396	1,327	2,135	2,103	1,997	2,751	2,710	2,575	4,269	4,205	3,995
Delivered Lumens (With Flood Accessory Kit) [1]	1,005	990	940	1,495	1,472	1,399	2,099	2,068	1,965	3,168	3,121	2,965
B.U.G. Rating [2]	B1-U0-G0	B1-U0-G0	B1-U0-G0	B1-U0-G0	B1-U0-G0	B1-U0-G0	B1-U0-G0	B1-U0-G0	B1-U0-G0	B2-U0-G0	B2-U0-G0	B2-U0-G0
CCT (Kelvin)	5,000	4,000	3,000	5,000	4,000	3,000	5,000	4,000	3,000	5,000	4,000	3,000
CRI (Color Rendering Index)	70	70	70	70	70	70	70	70	70	70	70	70
Power Consumption (Watts)	12W	12W	12W	18W	18W	18W	26W	26W	26W	38W	38W	38W

NOTES: 1 Includes shield and visor. **2** B.U.G. Rating does not apply to floodlighting.

LUMEN MAINTENANCE

Ambient Temperature	TM-21 Lumen Maintenance (72,000 Hours)	Theoretical L70 (Hours)
XTOR1B Model		
25°C	> 90%	255,000
40°C	> 89%	234,000
50°C	> 88%	215,000
XTOR2B Model		
25°C	> 89%	240,000
40°C	> 88%	212,000
50°C	> 87%	196,000
XTOR3B Model		
25°C	> 89%	240,000
40°C	> 88%	212,000
50°C	> 87%	196,000
XTOR4B Model		
25°C	> 89%	222,000
40°C	> 87%	198,000
50°C	> 87%	184,000

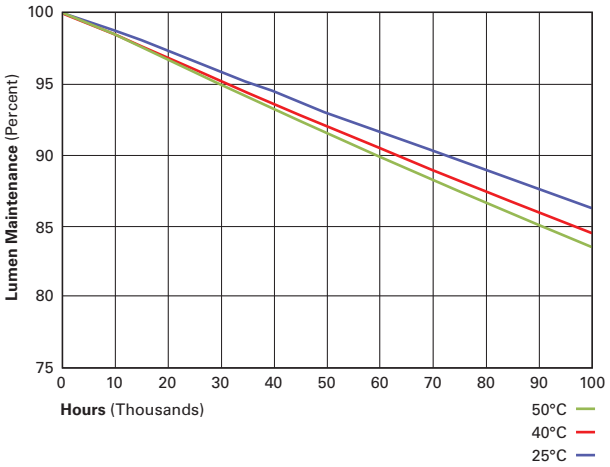

CURRENT DRAW

Voltage	Model Series			
	XTOR1B	XTOR2B	XTOR3B	XTOR4B
120V	0.103A	0.15A	0.22A	0.34A
208V	0.060A	0.09A	0.13A	0.17A
240V	0.053A	0.08A	0.11A	0.17A
277V	0.048A	0.07A	0.10A	0.15A
347V	0.039A	0.06A	0.082A	0.12A

ORDERING INFORMATION

Sample Number: XTOR2B-W-WT-PC1

Series [1]	**LED Kelvin Color**	**Housing Color**	**Options** (Add as Suffix)	**Accessories** (Order Separately)
XTOR1B=Small Door, 12W **XTOR2B**=Small Door, 18W **XTOR3B**=Small Door, 26W **XTOR4B**=Medium Door, 38W	**[Blank]**=Bright White (Standard), 5000K **W**=Neutral White, 4000K **Y**=Warm White, 3000K	**[Blank]**=Carbon Bronze (Standard) **WT**=Summit White **BK**=Black **BZ**=Bronze **AP**=Grey **GM**=Graphite Metallic **DP**=Dark Platinum	**PC1**=Photocontrol 120V [2] **PC2**=Photocontrol 208-277V [2, 3] **347V**=347V [4] **HA**=50°C High Ambient [4]	**WG/XTOR**=Wire Guard [5] **XTORFLD-KNC**=Knuckle Floodlight Kit [6] **XTORFLD-TRN**=Trunnion Floodlight Kit [6] **XTORFLD-KNC-WT**=Knuckle Floodlight Kit, Summit White [6] **XTORFLD-TRN-WT**=Trunnion Floodlight Kit, Summit White [6] **EWP/XTOR**=Escutcheon Wall Plate, Carbon Bronze **EWP/XTOR-WT**=Escutcheon Wall Plate, Summit White

NOTES:
1. DesignLights Consortium® Qualified and classified for both DLC Standard and DLC Premium, refer to www.designlights.org for details.
2. Photocontrols are factory installed.
3. Order PC2 for 347V models.
4. Thru-branch wiring not available with HA option or with 347V. XTOR3B not available with HA and 347V or 120V combination.
5. Wire guard for wall/surface mount. Not for use with floodlight kit accessory.
6. Floodlight kit accessory supplied with knuckle (KNC) or trunnion (TRN) base, small and large top visors and small and large impact shields.

STOCK ORDERING INFORMATION

12W Series	**18W Series**	**26W Series**	**38W Series**
XTOR1B=12W, 5000K, Carbon Bronze	**XTOR2B**=18W, 5000K, Carbon Bronze	**XTOR3B**=26W, 5000K, Carbon Bronze	**XTOR4B**=38W, 5000K, Carbon Bronze
XTOR1B-WT=12W, 5000K, Summit White	**XTOR2B-W**=18W, 4000K, Carbon Bronze	**XTOR3B-W**=26W, 4000K, Carbon Bronze	**XTOR4B-W**=38W, 4000K, Carbon Bronze
XTOR1B-PC1=12W, 5000K, 120V PC, Carbon Bronze	**XTOR2B-WT**=18W, 5000K, Summit White	**XTOR3B-WT**=26W, 5000K, Summit White	**XTOR4B-WT**=38W, 5000K, Summit White
XTOR1B-W=12W, 4000K, Carbon Bronze	**XTOR2B-PC1**=18W, 5000K, 120V PC, Carbon Bronze	**XTOR3B-PC1**=26W, 5000K, 120V PC, Carbon Bronze	**XTOR4B-PC1**=38W, 5000K, 120V PC, Carbon Bronze
XTOR1B-W-PC1=12W, 4000K, 120V PC, Carbon Bronze	**XTOR2B-W-PC1**=18W, 4000K, 120V PC, Carbon Bronze		**XTOR4B-W-PC1**=38W, 4000K, 120V PC, Carbon Bronze

SITE PLAN REVIEW

6/11/18 Plan Commission Meeting

AGNL Dairy LLC / Gehl Foods

Village Planner Report **Germantown, Wisconsin**

Summary

Stacy Cooke, agent for AGNLDairy LLC, property owner, and Gehl Foods, is seeking approval of site development and building plans to construct a small building addition and install replacement ammonia condenser and receiver units to onto the existing production facility located at N116 W15970 Main Street.

Property Location: N116 W15970 Main Street

Property Owners: AGNL Dairy LLC
245 Park Ave 24th Floor
New York, NY

Current Zoning: M-1: Limited Industrial

Adjacent Land Uses		Zoning
North	Business	B-3
South	Business	B-3
East	Business	B-3
West	Business/Residential	B-3/Rs-6

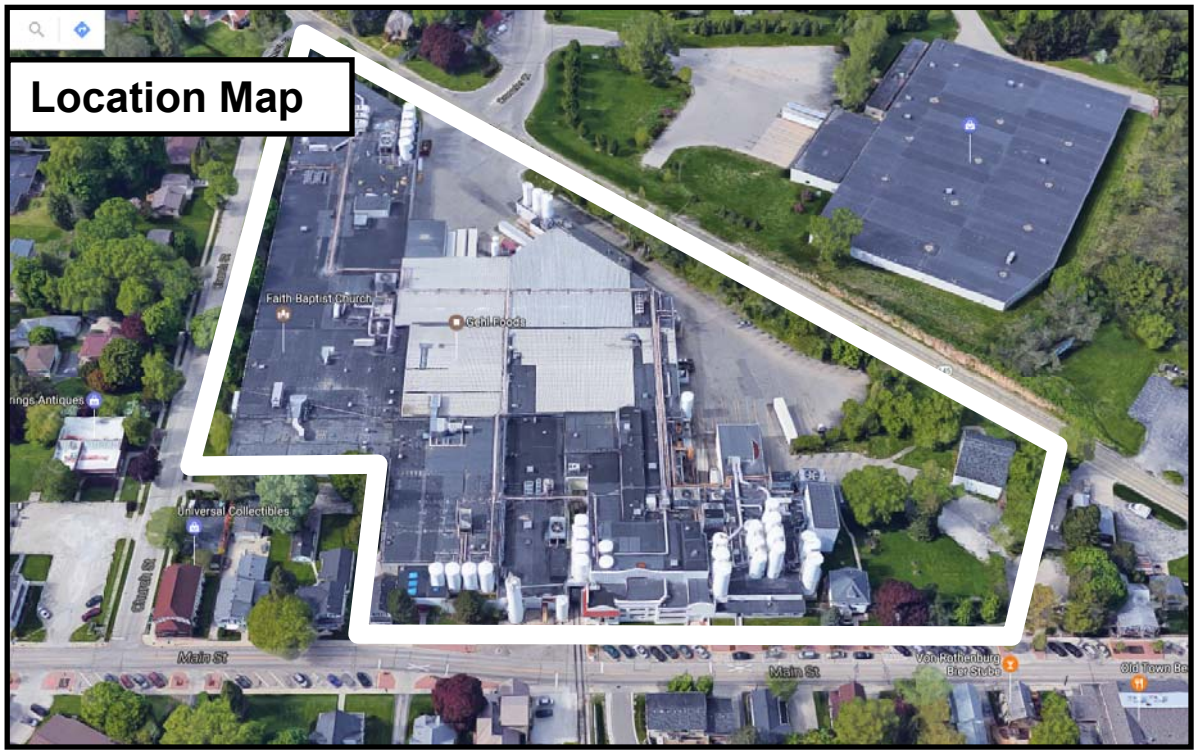

Proposal

Stacy Cooke, agent for AGNLDairy LLC, property owner, and Gehl Foods, is seeking approval of site development and building plans to construct a small building addition and install/relocate replacement ammonia condenser and receiver units onto the existing production facility located at N116 W15970 Main Street. As described in the project description dated April 10, the improvements include:

- Construct a 1,300 sqft building addition on the east elevation near the existing ammonia engine room comprised of structural steel, CMU block, and insulated metal panels to match the existing building color and materials;
- New storm water piping, grading and paving to direct surface water run-off to the existing storm sewer system;
- Install a new 4-cell ammonia evaporative condenser;
- Install a new high-pressure ammonia receiver;
- Install other equipment, including: concrete pad, chain link security fencing, 10' x 10' remote water sump, recirculation pumps and water treatment system

Staff Comment

The proposed building addition and equipment installation meets the M-1 Zoning District regulations including required setbacks, height limits, and other applicable restrictions. While the upper portion of the condenser units will be exposed and not entirely shielded, view of the building addition and ammonia equipment above are not visible from any public right-of-way in the vicinity.

Fire Department

While not affected by the proposed building addition and ammonia equipment installation, the Fire Department staff has reiterated their concern with the lack of a code-compliant and connected system of fire lanes within the property.

Inspection Services

Inspection Services has indicated that state-approved plans will be required prior to issuing a building permit along with the required $20,000 occupancy bond.

Village Planner Recommendation

APPROVE the site development & building plans for a building addition and installation of replacement ammonia condenser/receiver units and equipment to the existing Gehl Foods production facility located at N116 W15970 Main Street subject to the following conditions:

1. This approval is subject to all the conditions and requirements set forth herein and adopted by the Plan Commission. Approval is granted for the site development and building plans dated April 6, 2018 unless superseded by subsequent plan sheets approved by the Village Planner pursuant to revisions required herein and/or by the Plan Commission.
2. All exterior doors shall be clearly marked with reflective 5" or larger letters/numbers to aid emergency personnel access as required by the Police Department.
3. State approved plans and a $20,000 occupancy bond are required by the Building Inspection Department as part of the building permit application.

Village of Germantown ...Willkommen

Fee must accompany application

- ☐ $700 Minor Addition
- ☒ $1,240 Construction <10,000 SF
- ☐ $2,095 Construction 10,000 SF to 50,000
- ☐ $3,460 Industrial Construction >50,000 SF
- ☐ $3,460 Commercial Construction >50,000
- ☐ $200 Plan Commission Consultation
- ☒ $125 Fire Department Plan Review

PAID R. DATE 4-9-18

SITE PLAN REVIEW APPLICATION

Pursuant to Section 17.43 of the Municipal Code

Please read and complete this application carefully. All applications must be signed and dated.

1 APPLICANT OR AGENT

Stacy Cooke, Project Engineer
Gehl Foods
N116 W15970 Main Street
Germantown, WI 53022

Phone (262) 735-7441
E-Mail SCooke@gehlfoods.com

PROPERTY OWNER

AGNL Dairy, LLC
C/o Angelo, Gordon + Co, L.P.
245 Park Ave, 24th Floor
New York, NY 10167

Phone (212) 883-4110
E-Mail klombardo@angelogordon.com

2 PROPERTY ADDRESS

N116 W15970 Main Street
Germantown, WI 53022

3 NEIGHBORING USES – Specify name and type of use, e.g. Enviro Tech – Industrial, Smith – Residential, etc.

North	South	East	West
School, warehouse, business B3	Businesses B3	Businesses B3	Business, Residential B3, RS-4, RS-6, RS-7, Rd-2

4 READ AND INITIAL THE FOLLOWING:

X I am aware of the Village of Germantown ordinance requiring fire sprinklers in most new construction.

X I understand that all new development is subject to Impact and/or Connection Fees that must be paid before building permits will be issued.

X I understand that an incomplete application will be withdrawn from the Plan Commission agenda and that all resubmissions to the Plan Commission are subject to a new application fee.

5 SIGNATURES – ALL APPLICATION MUST BE SIGNED BY OWNER!

By: Gordon J. Whiting, President and Managing Director of AGNL Manager III, Inc., manager of AGNL Dairy LLC

Stacy K. Cooke 4/3/18
Applicant Date

Owner Date 4/5/18

Jeffrey W. Retzlaff
Village Planner and
Zoning Administrator

April 10, 2018

Mr. Retzlaff –

Gehl Foods, LLC is requesting a formal review with the Plan Commission in May to construct an Ammonia Condenser Addition onto the existing manufacturing facility at N116 W15970 Main Street.

Project Description:

The existing ammonia system consists of ammonia compressors, ammonia condensers, a high pressure ammonia receiver, and evaporators (silos, equipment, etc). This project focuses on improving the ammonia condensers and high pressure ammonia receiver; which will increase the capacity of the existing ammonia system by:

- Installing a new, larger ammonia evaporative condenser,
- Installing a new high pressure ammonia receiver, and
- Using the existing ammonia compressor system efficiently

Background:

The existing ammonia condenser system consists of three (3) ammonia condensers, installed in various locations on the building roof near Main Street (please see attached picture). Unfortunately, the existing ammonia condensers are undersized, unable to provide enough cooling throughout the year (especially during the summer and fall seasons), and nearing the end of their service life. In order to provide adequate cooling requirements for present and future needs, a new, larger ammonia condenser system will be required.

Project:

Gehl Foods needs to construct a new addition to house a new, larger ammonia condenser and its associated equipment closer to the ammonia engine room. The new addition will be approximately 1300 square feet constructed of structural steel, concrete, concrete masonry unit (CMU)/block, and insulated metal wall panels. The exterior façade will match that of the existing building. Also, new storm water piping, grading, and paving will be constructed to provide adequate surface water drainage away from the new building to the existing storm sewer system.

Major Equipment to be installed includes:

- A 4-cell ammonia condenser
- High Pressure Ammonia Receiver
- 10-foot by 10-foot by 12-foot remote water sump
- Four (4) recirculation pumps
- Water treatment system

W185 N11300 Whitney Dr., Germantown, WI 53022
262.251.8570 www.gehls.com

- Electrical panel

Additional construction includes process, plumbing, HVAC, electrical, and controls equipment and installation.

Lastly, this project will allow plant personnel safer access to the condensers as well as a single location to perform any required work on the equipment.

Zoning:

The existing facility is zoned an M-1 Limited Industrial District. As such, the design and construction of this addition is in accordance with the requirements set forth in the Zoning Code (Chapter 17.33 – M-1 Limited Industrial District). The overall height of the new addition, including the new 4-cell ammonia condenser, will be approximately 44'-11" from finished floor to the top of the fan screen of the condenser (as seen on Drawing No. A3.1).

Finally, the new addition will be constructed where asphalt pavement currently exists. As this is being constructed over an impervious surface, the impervious calculations remain the same.

Please contact me with any questions.

Sincerely,

Stacy Cooke, PE

Stacy Cooke, PE
Project Engineer

W185 N11300 Whitney Dr., Germantown, WI 53022
262.251.8570 www.gehls.com

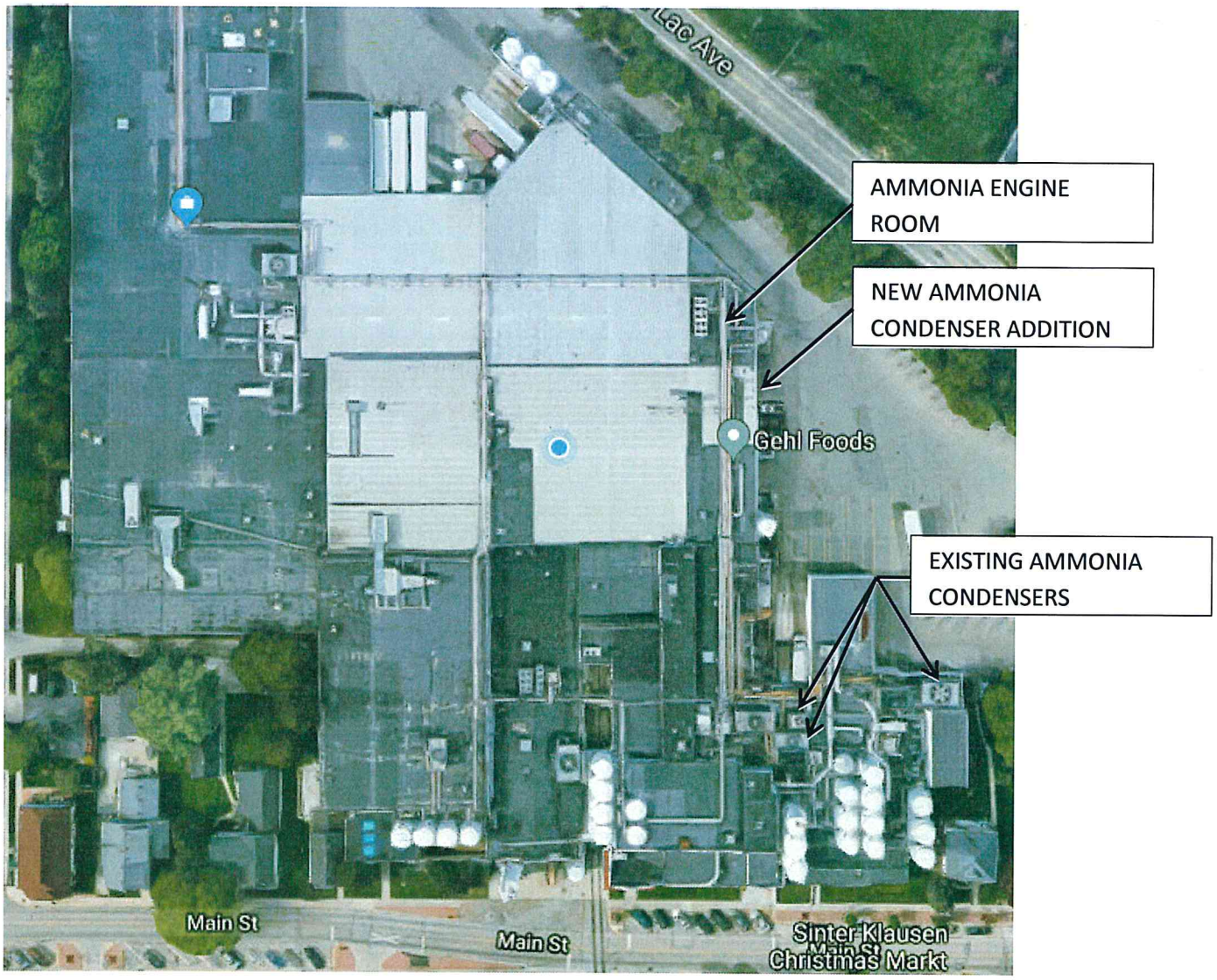

W185 N11300 Whitney Dr., Germantown, WI 53022
262.251.8570 www.gehls.com

SITE PLAN REVIEW CHECKLIST

Pursuant to Section 17.43 of the Municipal Code

This checklist provides a summary of requirements found in the Municipal Code. It is intended purely as a guide for developers and should not substitute for a full review of the Code and applicable regulations. (Revised 1/02)

GENERAL INFORMATION

- [x] Provide Completed Checklist with submittal
- [x] Names and addresses of owner/developer/designer
- [x] Graphic scale, north arrow
- [x] Location sketch
- [x] Size of site (gross and net acreage)
- [x] Existing zoning
- [x] Adjacent zoning and uses
- [x] Number of residents (subdivisions)
- [x] Number of employees

EXISTING SITE INFORMATION

- [x] Dimensions of site and lot lines (pipes found, pipes set, monuments)
- [x] Existing grades (2' contours minimum)
- [x] Adjacent property grades (within 10' minimum of property lines)
- [x] Adjacent structures (within 20' minimum of property lines)
- [x] Drainage systems and structures
- [x] Natural features (woods, streams, lakes, ponds, outcroppings)
- [ ] Wetland boundaries (provide date of staking) – N/A
- [ ] Floodplain elevation and boundaries – N/A
- [ ] Environmental concerns (underground tanks, etc) – N/A
- [x] Roads, curbs, parking lots, pavement areas
- [x] Structures (location, size)
- [x] Rights-of-Way (existing/ultimate)
- [x] Easements (drainage, utility)
- [x] Existing utilities (sanitary, water, electric, gas, telephone)
- [x] Benchmark locations and elevations
- [x] Location of fences, wells, borings, etc.

ARCHITECTURAL PLANS

- [x] Existing building location
- [x] Existing building elevations/materials
- [x] Proposed use (use list from Section 17.45)
- [x] Statement of design intent (narrative)
- [x] Proposed floor plans (dimension)
- [x] Square footage (total and individual rooms/stores)
- [x] Proposed elevations (dimension)
- [x] Proposed building height
- [x] Proposed materials and colors (material sample board required for new construction) – To match existing
- [ ] Proposed signage (elevations, color, square footage, height, construction material, lighting)
- [x] Details of any special features → N/A

PROPOSED SITE PLAN

- [x] Grading and spot elevations
- [x] Erosion control measures (silt fencing, hay bales, rip-rap, tracking mat, stockpile locations)
- [ ] Stormwater management
  - stormwater management design report – N/A
  - general drainage pattern ✓
  - swales w/ arrows for direction of flow N/A
  - pond design with outfalls – N/A
  - culverts (location/size) – N/A
- [x] Utilities (size, invert elevations, length, slope, etc.)
  - sanitary
  - water
  - stormsewer
- [x] Building location (dimension)
- [x] Building elevation (finished grade)
- [ ] Location of proposed signage – N/A
- [ ] Details of outside storage (including trash receptacles) – N/A
- [x] Setbacks (clearly marked and dimensioned)
- [ ] Vehicular entrances (dimension to centerline of nearest intersection) – N/A
- [ ] Streets (dimension and direction for one-ways) – N/A
- [ ] Curve radii – N/A
- [ ] Sidewalks (dimension) – N/A
- [x] Parking areas (show striping/spot elevations)
- [x] Parking setback from property line – N/A
- [ ] Loading areas (dimension) – N/A
- [x] Lot coverage
  - Square footage total
  - Impervious surfaces total (%)
  - Green space total (%)
  - Percent permitted (over/under %)
- [ ] Municipal utility connections – N/A
  - Sanitary sewer (pipe size/elevations)
  - Water (size, valve location, elevations)
  - Location of hydrants
- [ ] Easement for public water mains N/A

LIGHTING PLAN

- ☒ Major improvements for context
- ☒ Location/nature of existing fixtures
- ☒ Location of proposed fixtures
- ☒ Photometric report (to scale on plan)
- ☒ Manufacturers cut-sheets of all fixtures
- ☒ Lighting schedule
  - key to plan
  - number/type of fixtures
  - output (wattage)
- ☒ Installation details as appropriate

LANDSCAPING PLAN

- ☒ Major improvements for context (building, drives, walks)
- ☐ Proposed outdoor amenities (benches, paths, etc.) – N/A
- ☐ Existing vegetation – N/A
  - Species
  - Size
  - Approximate canopy in plan
- ☐ Vegetation to be destroyed – N/A
  - List and show location
- ☐ Proposed method of saving existing vegetation during construction – N/A

- ☐ Proposed landscape features (berms, fountains) – None
- ☒ Existing/proposed lighting – See above
- ☐ Irrigation/watering systems (locate outlets) – N/A
- ☐ Plant lists or schedules – N/A
  - Keyed to plan
  - Number of each species
  - Size when planted (caliper)
- ☐ Installation details/staking – N/A

MODEL SUBMITTAL INCLUDES THE FOLLOWING PLANS:

1. Cover / Title Page
2. Existing Conditions Survey
3. General Site Plan
4. Grading, Paving & Erosion Control Plan
5. Utility Plan
6. Site Details (curbing, catch basins, detention ponds, pavement, erosion control and sign details)
7. Landscape Plan
8. Landscape details (planting schedule, berming cross-sections, method of installation)
9. Lighting Plan
10. Floor Plan
11. Exterior Building Elevations
12. Building Material Sample Board

In addition to the items on this list, Village Staff and/or the Plan Commission may require additional drawings and data to be submitted for approval.

If any public improvements or work is to be done in the Public Right-of-Way, the Village will require that a Developer's Agreement be submitted and approved by the Village Board.

GEHL FOODS

AMMONIA CONDENSER ADDITION

N116 W15970 MAIN STREET
GERMANTOWN, WI 53022

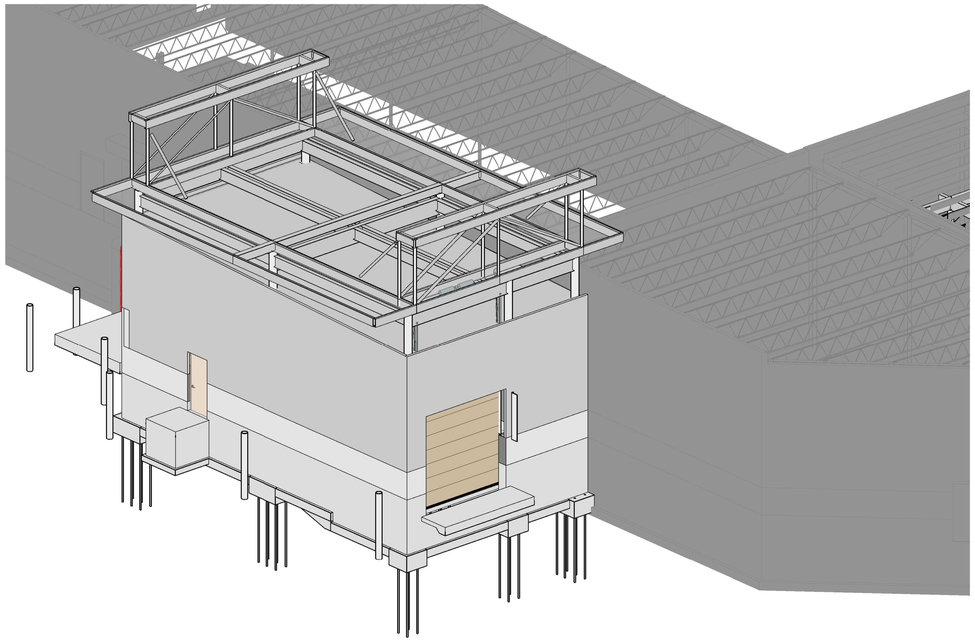

PROJECT OVERVIEW

FOR VISUALIZATION ONLY

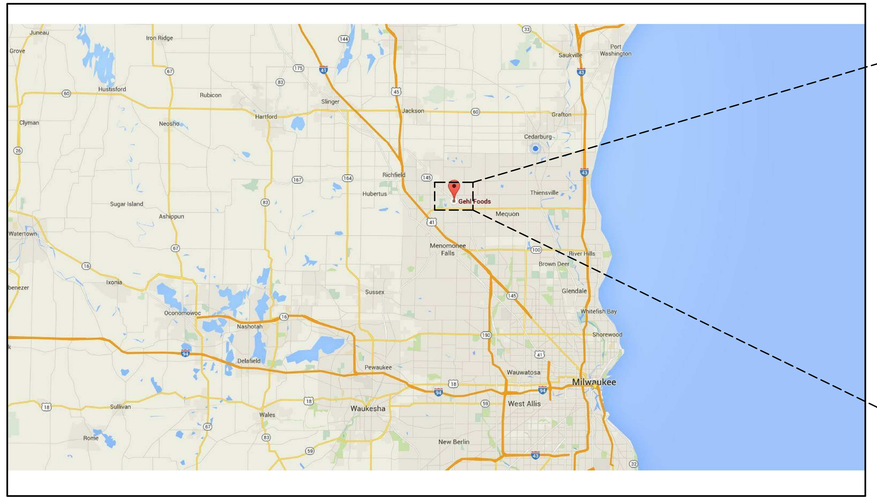

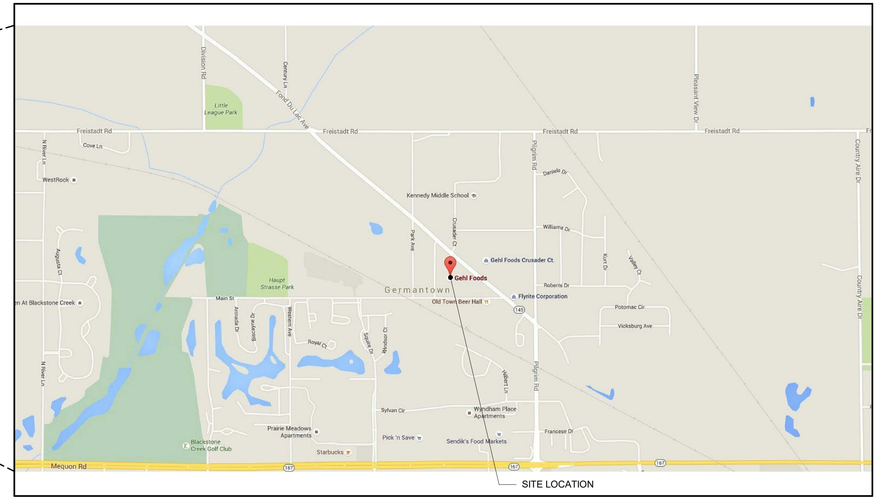

SHEET INDEX

T1.1	COVER SHEET
C1.0	SITE CIVIL PLAN
A1.1	SITE PLAN
A1.2	FIRST FLOOR DEMOLITION
A1.3	FIRST FLOOR PLAN
A3.1	EXTERIOR ELEVATIONS, SECTIONS, AND DETAILS
S0.1	GENERAL NOTES AND ABBREVIATIONS
S1.1	FOUNDATION PLAN
S1.2	FRAMING PLANS
S3.1	EXTERIOR ELEVATIONS
S5.1	SECTIONS AND DETAILS
S5.2	SECTIONS AND DETAILS
S5.3	SECTIONS AND DETAILS
S5.4	SECTIONS AND DETAILS
S5.5	SECTIONS AND DETAILS
P0.1	LEGEND AND SPECIFICATIONS
P1.1	UNDERGROUND AND FIRST FLOOR PLANS
P2.0	ISOMETRICS
P3.0	DETAILS
P4.0	SCHEDULES
H0.1	LEGEND AND SPECIFICATIONS
H1.1	FIRST FLOOR PLAN
E1.0	ELECTRICAL LIGHTING PLAN
E1.1	ELECTRICAL PHOTOMETRIC LIGHTING PLAN

GehlFoods
N116 W15970 Main Street
Germantown, WI
262.251.8570

IN ASSOCIATION WITH:

AMBROSE ENGINEERING
PHONE: 262-377-7602
AE PROJECT# 018.050.01

Author: LI
Edited By: LI
Date Created:
Type:
Notes:

Seal / Signature

Sheet Title: COVER SHEET
Project: AMMONIA CONDENSER ADDITION
Description: AMMONIA CONDENSER ADDITION
Datastream ID:
Datastream Description:

Edit Date: 04/06/18
Edit Time:
Version Author: LI
Version Editor: LI
Drawing No.
T1.1

4/6/2018 9:02:54 AM C:\Revit Local\Revit 2017\018-050 Gehl Foods - Overall_Structural (illocal)_2017.rvt

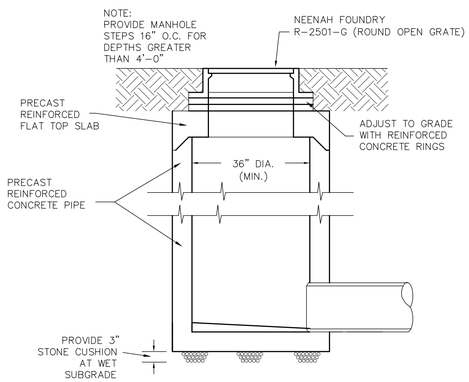

PRECAST STORM MH/INLET

NOT TO SCALE

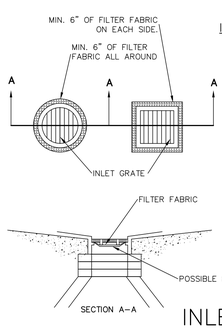

INLET GRATE SCREEN CONSTRUCTION SPECIFICATIONS

1. REMOVE INLET GRATE AND PLACE A SINGLE SHEET OF FILTER FABRIC ACROSS THE OPENING. THE FABRIC SHOULD EXTEND AT LEAST 6" BEYOND THE INLET OPENING. A REINFORCING MATERIAL MAY BE REQUIRED TO PREVENT SAGGING.

2. SEDIMENT DEPOSITS SHALL BE REMOVED AFTER EACH STORM EVENT OR AT A DEPTH OF 1". EXTREME CARE SHALL BE TAKEN NOT TO SPILL ACCUMULATED SEDIMENT INTO INLET, WHEN CLEANING OR REPLACING FILTER FABRIC.

3. FILTER FABRIC SHALL HAVE THE FOLLOWING PROPERTIES:
   A. GRAB STRENGTH: 100LBS. (ASTM D-3786)
   B. MULLEN BURST: 200 PSI (ASTM D-3786)
   C. EQUIVALENT OPENING SIZE: BETWEEN 50 AND 140 FOR SOILS WITH MORE THAN 15 PERCENT BY WEIGHT PASSING A NO. 200 SIEVE. BETWEEN 20 AND 50 FOR SOILS WITH LESS THAN 15 PERCENT BY WEIGHT PASSING A NO. 200 SIEVE.
   D. WATER FLOW RATE OF 10 GAL/MIN./SQ.FT. AT 50 MM CONSTANT HEAD (ASTM D-4491)
   E. ULTRA VIOLET RADIATION STABILITY OF 90% F. IF SUPPORT NETTING IS REQUIRED, NETTING SHALL BE AN INDUSTRIAL POLYPROPYLENE WITH A 3/4 INCH SPACING OR EQUIVALENT.

NOTE:
INSTALL IN ALL STORM INLETS AND CATCH BASINS LOCATED WITHIN AND ADJACENT TO THE CONSTRUCTION AREA

INLET GRATE SCREEN

PER WDNR TECHNICAL STANDARD 1060

NOT TO SCALE

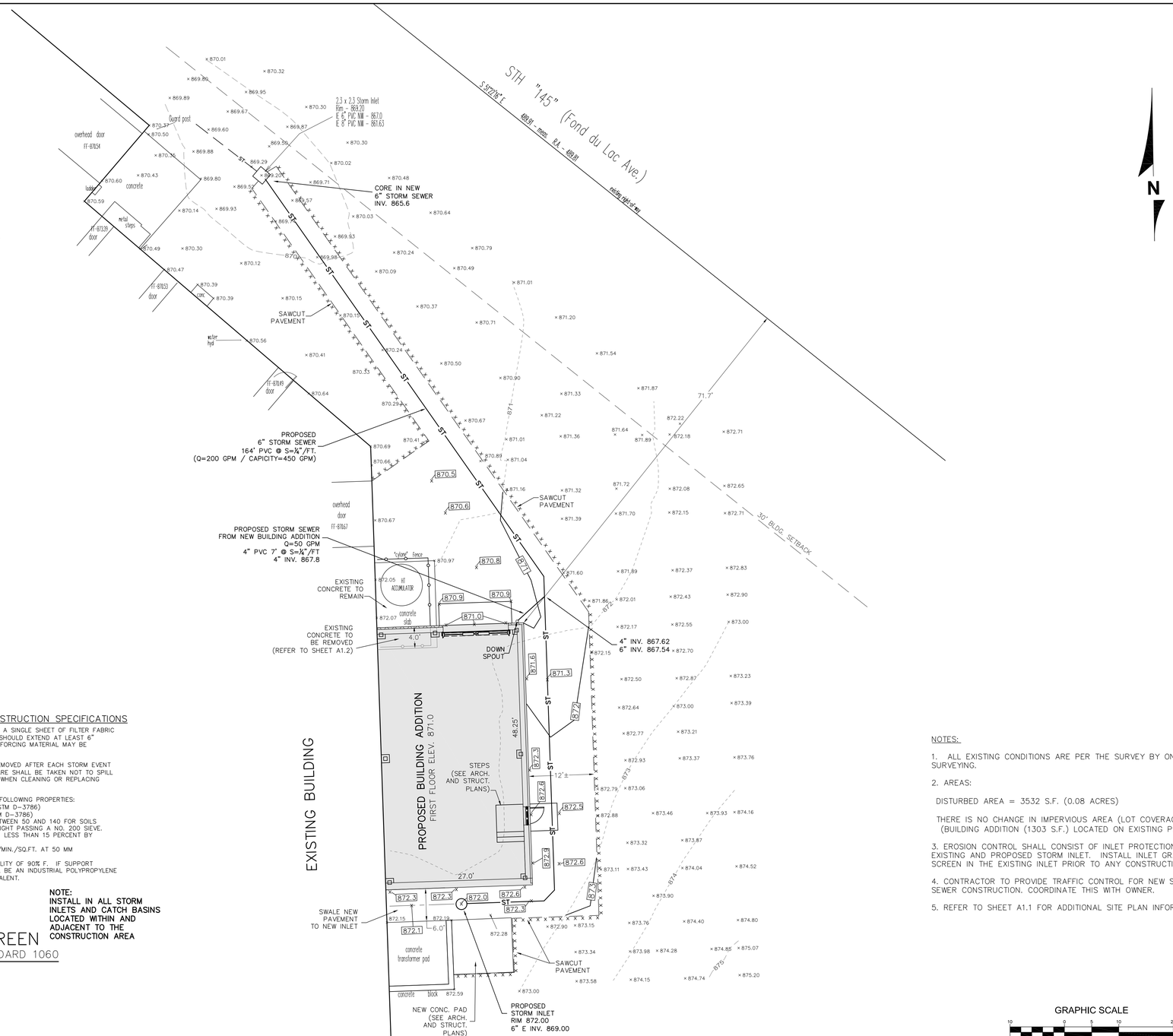

NOTES:

1. ALL EXISTING CONDITIONS ARE PER THE SURVEY BY ON TARGET SURVEYING.

2. AREAS:

DISTURBED AREA = 3532 S.F. (0.08 ACRES)

THERE IS NO CHANGE IN IMPERVIOUS AREA (LOT COVERAGE) (BUILDING ADDITION (1303 S.F.) LOCATED ON EXISTING PAVEMENT)

3. EROSION CONTROL SHALL CONSIST OF INLET PROTECTION IN THE EXISTING AND PROPOSED STORM INLET. INSTALL INLET GRATE SCREEN IN THE EXISTING INLET PRIOR TO ANY CONSTRUCTION.

4. CONTRACTOR TO PROVIDE TRAFFIC CONTROL FOR NEW STORM SEWER CONSTRUCTION. COORDINATE THIS WITH OWNER.

5. REFER TO SHEET A1.1 FOR ADDITIONAL SITE PLAN INFORMATION

GRAPHIC SCALE

10 0 5 10 20

1 inch = 10 ft

TOTAL LOT AREA = 8.91 ACRES
EXISTING IMPERVIOUS SURFACE = 7.04 ACRES (79% OF SITE)

EXISTING ZONING: M-1
SETBACKS: F=30', S=10', R=25'
MAX. BLDG. HT. = 45'
MAX. LOT COVERAGE = 80%

TO OBTAIN LOCATIONS OF PARTICIPANTS UNDERGROUND FACILITIES BEFORE YOU DIG IN WISCONSIN

CALL DIGGERS HOTLINE
1-800-242-8511
TOLL FREE
WIS STATUTE 196.375(1974) REQUIRES MIN. 3 WORK DAYS NOTICE BEFORE YOU EXCAVATE
MILW. AREA 259-1181

LEGEND

864	EXISTING CONTOUR
× 862.5	EXISTING ELEVATION
872	PROPOSED CONTOUR
872.3	PROPOSED ELEVATION
ST	PROPOSED STORM SEWER

CONTRACTOR SHALL PERFORM THE WORK IN CONFORMANCE WITH THE VILLAGE STANDARDS AND SPECIFICATIONS:

SECTION 3.0: GRADING AND EROSION CONTROL REQUIREMENTS:
http://www.village.germantown.wi.us/DocumentCenter/View/74

SECTION 4.0: STORM SEWER CONVEYANCE SYSTEM REQUIREMENTS:
http://www.village.germantown.wi.us/DocumentCenter/View/75

SECTION 5.0: SANITARY SEWER SYSTEM REQUIREMENTS:
http://www.village.germantown.wi.us/DocumentCenter/View/76

SECTION 6.0: WATER DISTRIBUTION SYSTEM REQUIREMENTS:
http://www.village.germantown.wi.us/DocumentCenter/View/77

SECTION 8.0: ROADWAY REQUIREMENTS:
http://www.village.germantown.wi.us/DocumentCenter/View/79

SITE GRADING, STORM SEWER AND EROSION CONTROL PLAN

GehlFoods
N116 W15970 Main Street
Germantown, WI
262.251.8570

IN ASSOCIATION WITH:

CJ engineering
civil design and consulting
9205 W. Center Street
Suite 1
Milwaukee, WI 53222
PH.: (414) 443-1312
www.cjengineering.com

Author:
Edited By:
Date Created: 3/12/2018
Type:
Notes:

SPACE RESERVED FOR PE STAMP

Sheet Title: SITE CIVIL PLAN
Project: GEHLS-AMMONIA CONDENSER ADDITION
Description:
Datastream ID:
Datastream Description:

Edit Date:
Edit Time:
Version Author:
Version Editor:
Drawing No. C1.0
1 of 1

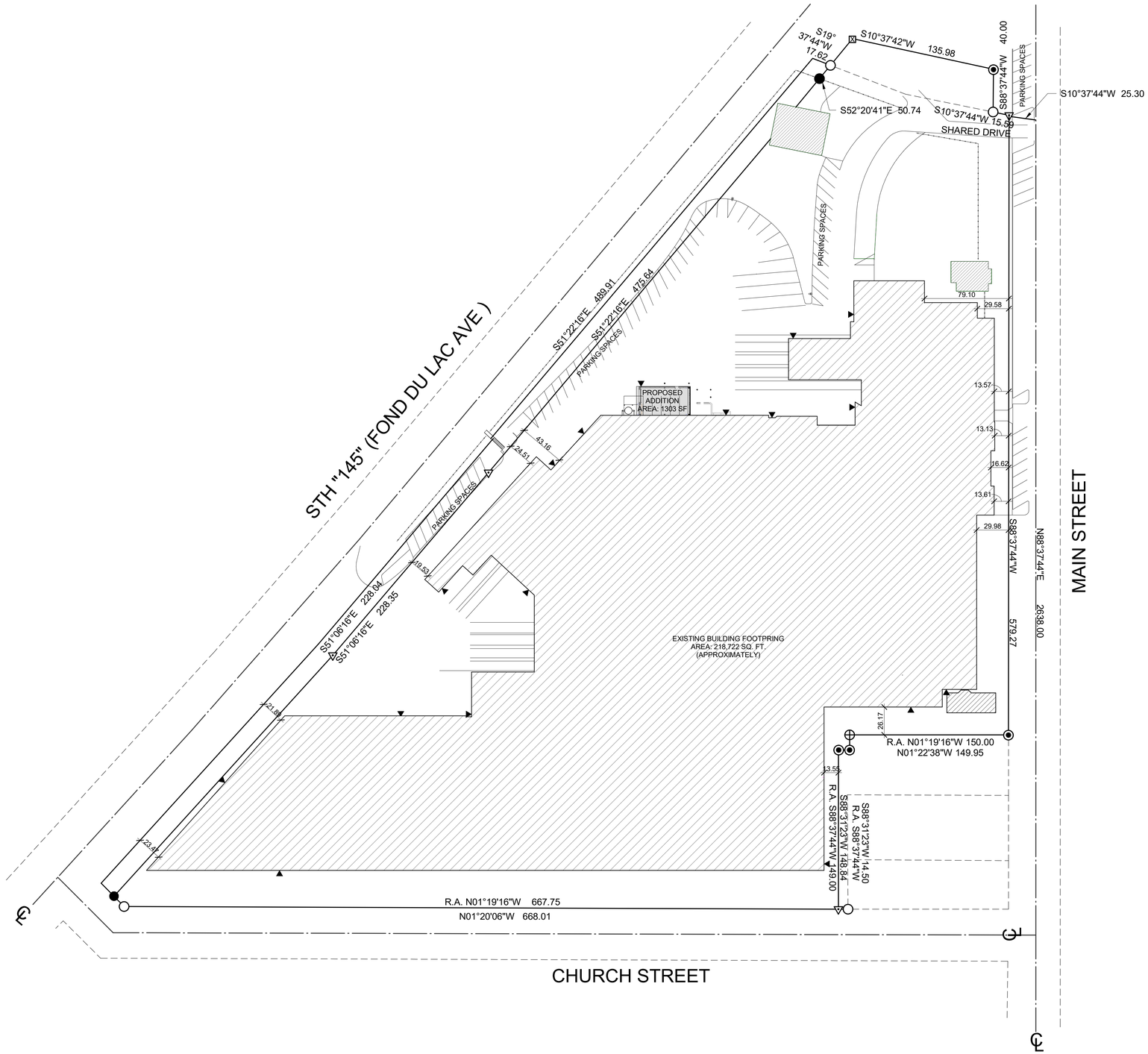

NORTH

SITE PLAN

SCALE: 1" = 50'-0"

DIGGERS HOTLINE

Toll Free (800) 242-8511

(811)

www.DiggersHotline.com

BUILDING DATA

BUILDING CODE:	2009 IBC	
OCCUPANCIES:	EXISTING FACTORY	"F-1" FOOD PROCESSING
	EXISTING WAREHOUSE	"S-1"
	EXISTING & NEW	"B"
CLASS OF CONSTRUCTION:	TYPE V-B	
NO OF STORIES:	ONE	
BUILDING IS:	SPRINKLERED, NON SEPARATED USES	

AREA:
ALLOWABLE AREA

TABLE

F-1	8500 SF
S-1	9000 SF
B	9000 SF

TOTAL ALLOAWBLE F-1
UNLIMITED ARE PER VARIANCE DATED AUGUST 28, 2006

ACTUAL AREA:	EXISTING F-1/S-1 + ACCESSORY USE "B"	218722 SF
	NEW F-1	1303 SF
	BUILDING TOTAL	220025 SF
PROJECT AREA:	NEW F-1	1303 SF
	PROJECT TOTAL	1303 SF

OCCUPANT LOAD:
BY CALCULATION
NEW INDUSTRIAL AREA — 100 SF GROSS — 13 PEOPLE (NO NEW OCCUPANTS, OCCUPANTS ACCOUNTED FOR IN OTHER AREAS)

EXIT WIDTH:
TOTAL BUILDING
REQUIRED — .2"/PERSON x 13 PEOPLE = 2.6"
PROVIDED — (1) 36" DOORS

EXIT TRAVEL DISTANCE:
F-1 — 250 ft

GehlFoods
N116 W15970 Main Street
Germantown, WI
262.251.8570

IN ASSOCIATION WITH:

AMBROSE ENGINEERING
PHONE: 262-377-7602
AE PROJECT# 018.050.01

Author: LI
Edited By: LI
Date Created:
Type:
Notes:

Seal / Signature

WISCONSIN THOMAS J. DEKKER E-16974 MILWAUKEE WI PROFESSIONAL ENGINEER
4-6-18

Sheet Title: SITE PLAN
Project: AMMONIA CONDENSER ADDITION
Description: AMMONIA CONDENSER ADDITION
Datastream ID:
Datastream Description:

Edit Date: 04/06/18
Edit Time:
Version Author: LI
Version Editor: LI
Drawing No.
A1.1

4/6/2018 9:02:33 AM C:\Revit Local\Revit 2017\018-050 Gehl Foods - Overall_Structural (llocal)_2017.rvt

GENERAL DEMOLITION NOTES

1. OWNER IS RESPONSIBLE FOR REMOVAL OF ALL LOOSE FURNISHINGS PRIOR TO GENERAL DEMOLITION. ALL ITEMS INCLUDING DOORS, DOOR HARDWARE, CEILING TILES CONSIDERED SALVAGEABLE SHALL ALSO BE REMOVED BY THE OWNER PRIOR TO GENERAL DEMOLITION.
2. REMOVE ALL APPLIED FINISHES AND PREPARE SUBSTRATE FOR NEW FINISHES. SEE ROOM FINISH SCHEDULE FOR FINISHES.
3. EXISTING CONDITIONS: EXISTING CONDITIONS SHOWN ON DRAWINGS REPRESENT CURRENT BUILDING. IT IS THE RESPONSIBILITY OF THE CONTRACTOR TO FIELD VERIFY EXISTING CONDITIONS PRIOR TO PERFORMING THE WORK. REPORT ANY DISCREPANCIES TO THE ARCHITECT/ENGINEER FOR REVIEW. WORK DONE WITHOUT RESOLUTION OF DISCREPANCIES MUST BE REDONE AT THE REQUEST OF THE ARCHITECT/ENGINEER AT NO ADDITIONAL COST TO THE CONTRACT.
4. UNLESS NOTED OTHERWISE, PATCH ALL FLOORS, BASE, WALLS AND CEILINGS AT EXPOSED AREAS AFFECTED BY DEMOLITION REGARDLESS OF TRADE DOING THE DEMOLITION WORK. PATCH TO MATCH ADJACENT EXISTING CONSTRUCTION WHERE SPECIFIC INFORMATION IS NOT NOTED OR SCHEDULED. REFER TO ROOM FINISH SCHEDULE.
5. DISPOSE OF ALL BUILDING MATERIAL IN LAWFUL MANNER.
6. SEE FLOOR PLANS, ELEVATIONS, SECTIONS AND DETAILS FOR ADDITIONAL DEMOLITION INFORMATION WHICH MAY NOT BE INDICATED ON DEMOLITION PLANS AND TO COORDINATE EXTENT OF DEMOLITION REQUIRED.
7. SEE PLUMBING, HVAC AND ELECTRICAL DRAWINGS FOR ANY REQUIRED DEMOLITION OF PLUMBING, HVAC AND ELECTRICAL EQUIPMENT/MATERIALS PERFORMED BY THOSE TRADES.
8. OWNER TO REMOVE ALL SIGNAGE.

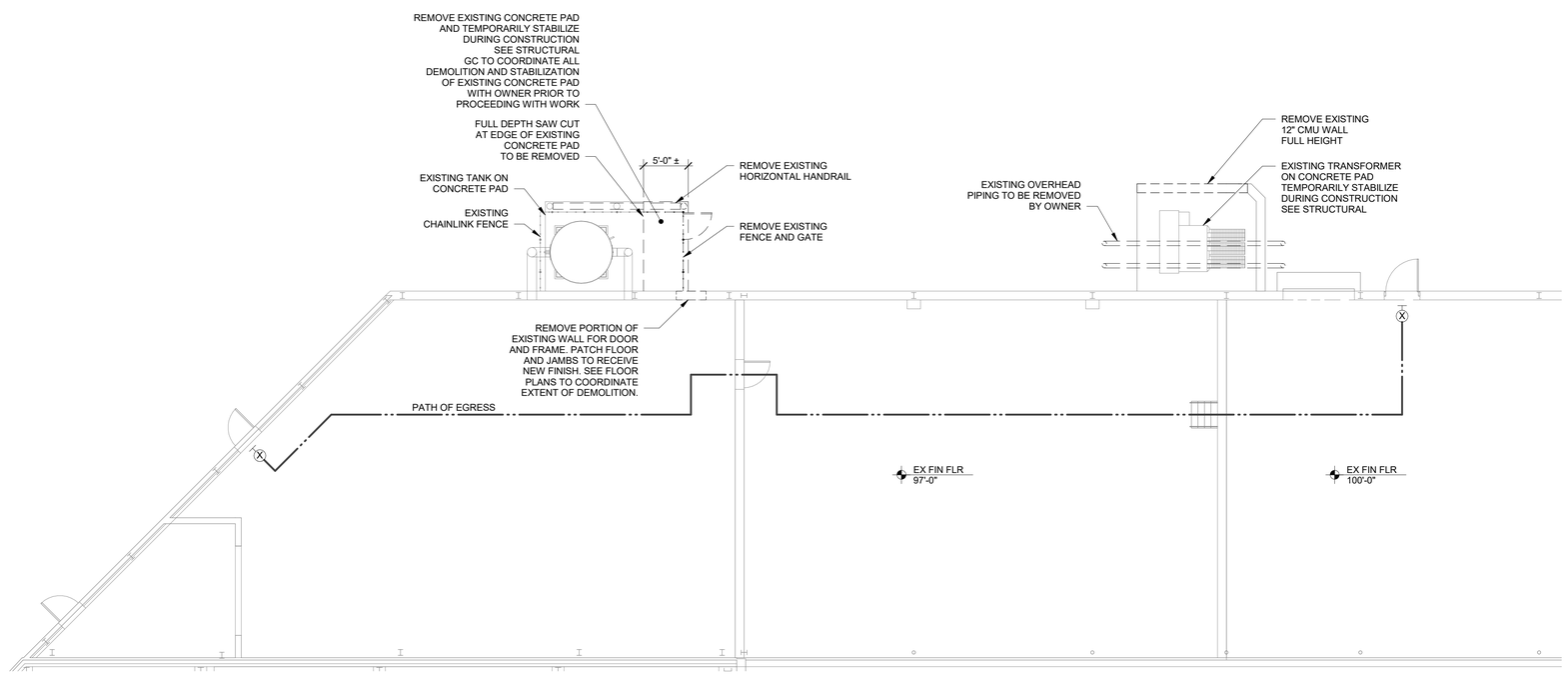

NORTH

FIRST FLOOR DEMOLITION

SCALE: 1/8" = 1'-0"

Gehl Foods
N116 W15970 Main Street
Germantown, WI
262.251.8570

IN ASSOCIATION WITH:

AMBROSE ENGINEERING
PHONE: 262-377-7602
AE PROJECT# 018.050.01

Author: LI
Edited By: LI
Date Created:
Type:
Notes:

Seal / Signature

WISCONSIN THOMAS J. DEKKER E-16974 MILWAUKEE WI PROFESSIONAL ENGINEER
4-6-18

Sheet Title: FIRST FLOOR DEMOLITION
Project: AMMONIA CONDENSER ADDITION
Description: AMMONIA CONDENSER ADDITION
Datastream ID:
Datastream Description:

Edit Date: 04/06/18
Edit Time:
Version Author: LI
Version Editor: LI
Drawing No.
A1.2

4/6/2018 9:02:34 AM C:\Revit Local\Revit 2017\018-050 Gehl Foods - Overall_Structural (illocal)_2017.rvt

DOOR SCHEDULE

DOOR MARK	SIZE	COUNT	TYPE	DOOR MATERIAL	FRAME MATERIAL	DOOR SWING	LOCK TYPE	LOCK SWING	REMARKS
1	3068	1	FLUSH	HM	PRE-HUNG	LEFT	ADA LOCK	RHR	1, 2, 3, 4, 5
2	3068	1	FLUSH	HM	PRE-HUNG	RIGHT	ADA PASSAGE	----	1, 2, 7
3	120140	1	FLUSH	HM	-----	OVERHEAD	----	----	1, 3, 4, 6, 8

NOTES:
1. PAINT
2. CLOSER
3. WEATHER STRIP
4. SWEEP
5. INSULATED (R-5)
6. INSULATED (R-16)
7. 1-12/ HR RATED DOOR AND FRAME
8. OPERATOR

ROOM FINISH SCHEDULE

ROOM NAME	ROOM MARK	WALLS				CEILINGS	CEILING HEIGHT	FLOORS	BASE	REMARKS
		NORTH	EAST	SOUTH	WEST					
MECHANICAL EQUIPMENT ROOM	101	STRUCTURE	STRUCTURE	STRUCTURE	STRUCTURE	STRUCTURE	±17'-8"	CONCRETE	-----	1, 2

WALL NOTES:
1. EXPOSE STRUCTURE, TWO COATS FINISH PAINT.

CEILING NOTES:
2. EXPOSE STRUCTURE, TWO COATS FINISH PAINT.

FLOOR NOTES:
3. CONCRETE SEALER.

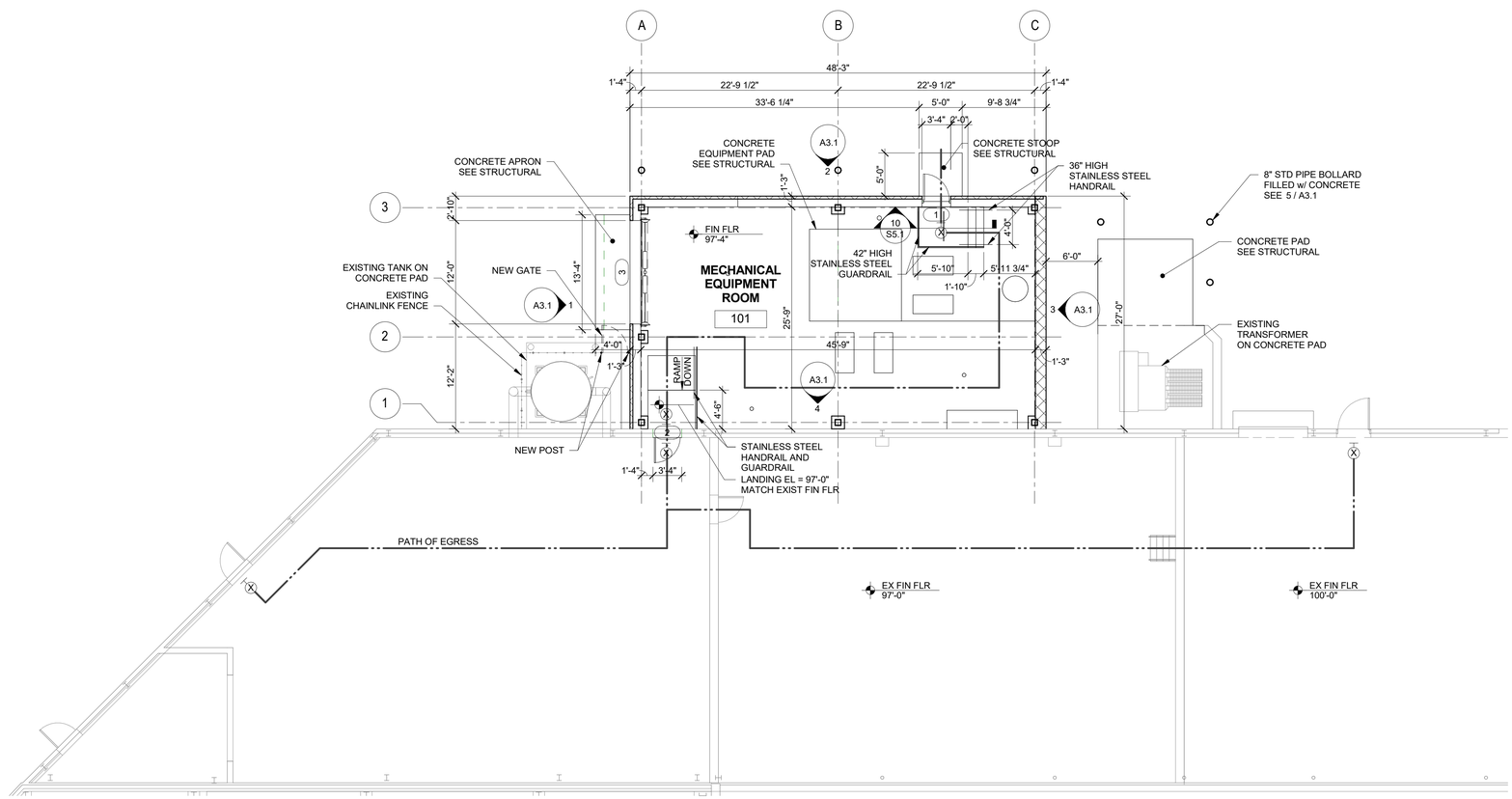

FIRST FLOOR PLAN

SCALE: 1/8" = 1'-0"

GehlFoods
N116 W15970 Main Street
Germantown, WI
262.251.8570

IN ASSOCIATION WITH:

AMBROSE ENGINEERING
PHONE: 262-377-7602
AE PROJECT# 018.050.01

Author: LI
Edited By: LI
Date Created:
Type:
Notes:

Seal / Signature

WISCONSIN THOMAS J. DEKKER E-16974 MILWAUKEE WI PROFESSIONAL ENGINEER
4-6-18

Sheet Title: FIRST FLOOR PLAN
Project: AMMONIA CONDENSER ADDITION
Description: AMMONIA CONDENSER ADDITION
Datastream ID:
Datastream Description:

Edit Date: 04/06/18
Edit Time:
Version Author: LI
Version Editor: LI
Drawing No.
A1.3

4/6/2018 9:02:35 AM C:\Revit Local\Revit 2017\018-050 Gehl Foods - Overall_Structural (ilocal)_2017.rvt

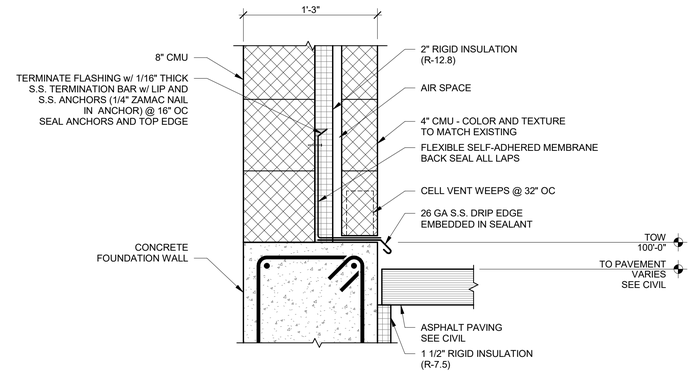

8 BASE FLASHING DETAIL

A3.1 SCALE: 1 1/2" = 1'-0"

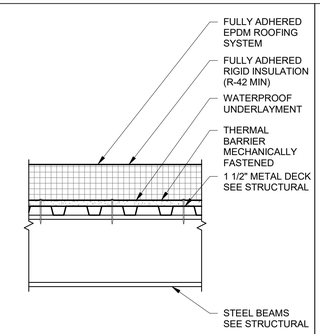

7 TYPICAL ROOF TYPE

A3.1 SCALE: 1" = 1'-0"

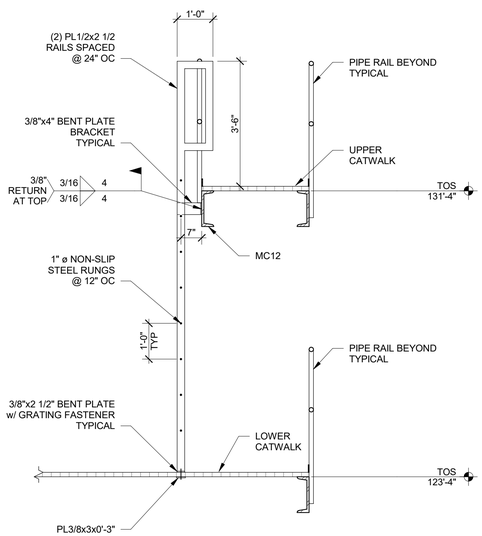

10 LADDER ELEVATION

A3.1 SCALE: 1/2" = 1'-0"

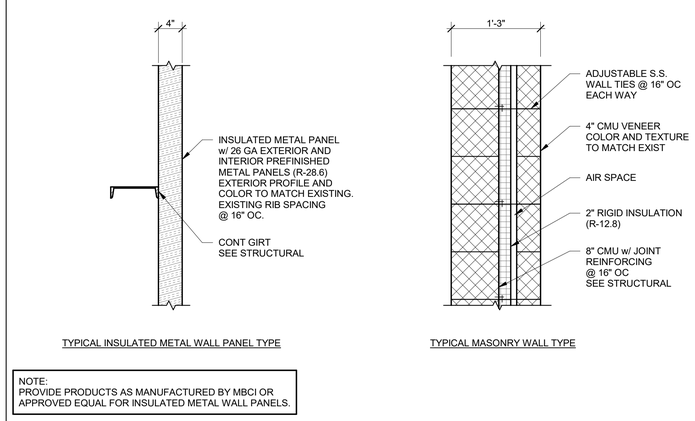

NOTE:
PROVIDE PRODUCTS AS MANUFACTURED BY MBCI OR APPROVED EQUAL FOR INSULATED METAL WALL PANELS.

6 WALL TYPES

A3.1 SCALE: 1" = 1'-0"

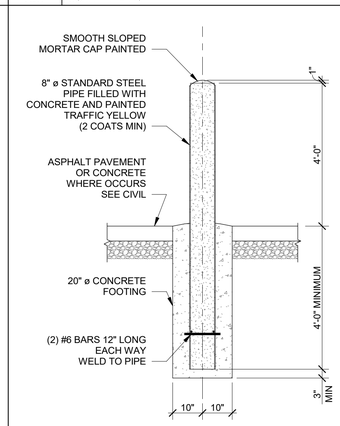

5 EXTERIOR PIPE BOLLARD

A3.1 SCALE: 1/2" = 1'-0"

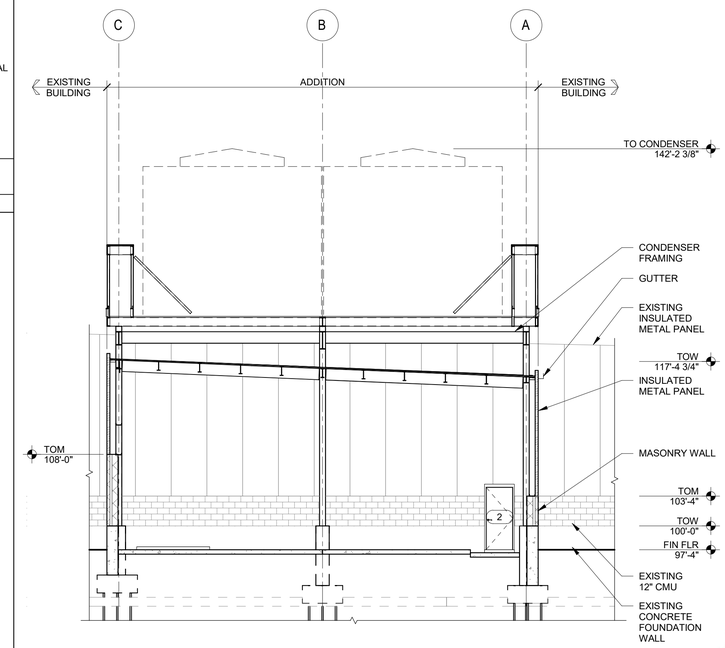

4 CROSS SECTION

A3.1 SCALE: 1/8" = 1'-0"

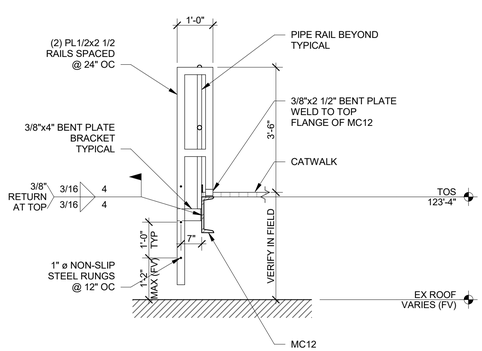

9 LADDER ELEVATION

A3.1 SCALE: 1/2" = 1'-0"

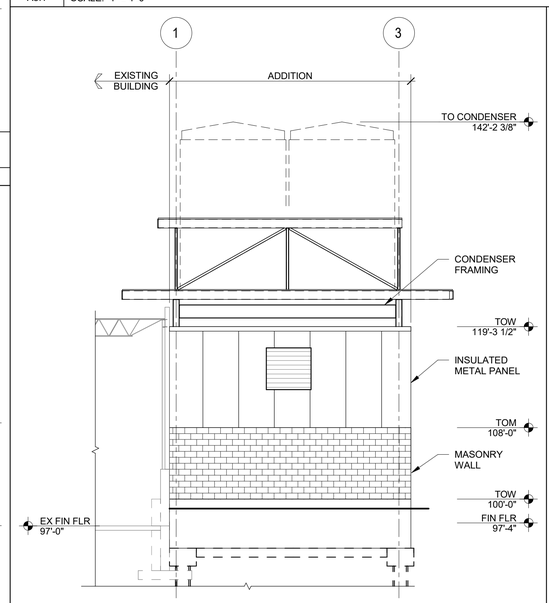

3 SOUTH ELEVATION

A3.1 SCALE: 1/8" = 1'-0"

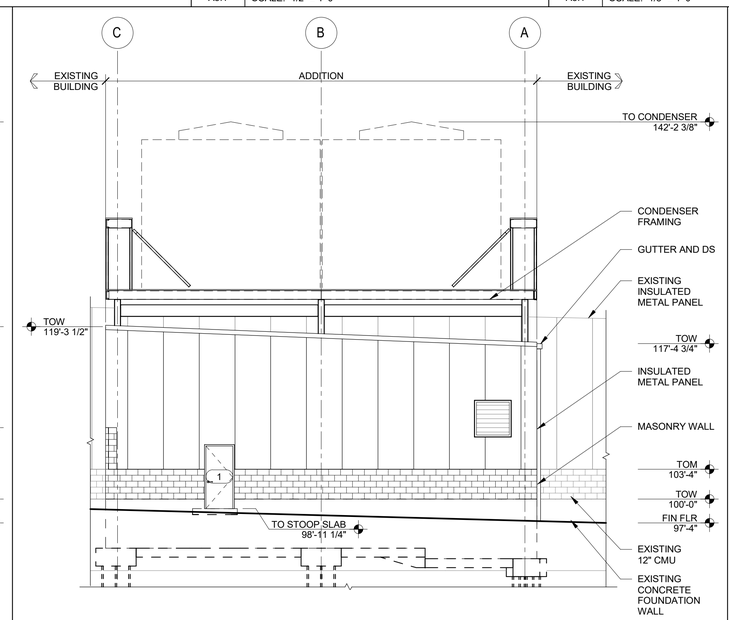

2 EAST ELEVATION

A3.1 SCALE: 1/8" = 1'-0"

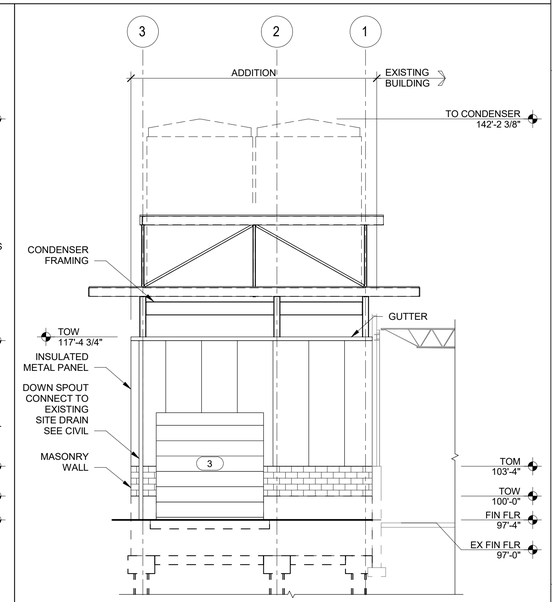

1 NORTH ELEVATION

A3.1 SCALE: 1/8" = 1'-0"

GehlFoods
N116 W15970 Main Street
Germantown, WI
262.251.8570
IN ASSOCIATION WITH:
AMBROSE ENGINEERING
PHONE: 262-377-7602
AE PROJECT# 018.050.01

Author: LI
Edited By: LI
Date Created:
Type:
Notes:

Seal / Signature

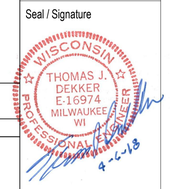

Sheet Title: EXTERIOR ELEVATIONS, SECTIONS, AND DETAILS
Project: AMMONIA CONDENSER ADDITION
Description: AMMONIA CONDENSER ADDITION
Datastream ID:
Datastream Description:

Edit Date: 04/06/18
Edit Time:
Version Author: LI
Version Editor: LI
Drawing No.
A3.1

4/6/2018 9:02:37 AM C:\Revit Local\Revit 2017\018-050 Gehl Foods - Overall_Structural (llocal)_2017.rvt

G E N E R A L N O T E S

1.1 GENERAL:

1.1.1 SCOPE: THE FOLLOWING GENERAL AND SPECIFIC NOTES SHALL APPLY EQUALLY TO ALL CONTRACTORS AND SUPPLIERS ENGAGED IN EXECUTION OF THE WORK SHOWN ON THE CONTRACT DOCUMENTS. THESE NOTES SUPPLEMENT AND ARE MADE A PART OF THE PLANS AND SPECIFICATIONS.

1.1.2 REFERENCES: ALL CONSTRUCTION SHALL BE EXECUTED IN CONFORMANCE WITH THE FOLLOWING:
- PLANS AND SPECIFICATIONS
- GOVERNING LOCAL AND MUNICIPAL CODES
- 2011 WISCONSIN COMMERCIAL BUILDING CODE
- 2009 INTERNATIONAL BUILDING CODE (IBC)
- ASTM INTERNATIONAL (ASTM)
- OCCUPATIONAL SAFETY AND HEALTH ADMINISTRATION (OSHA)

CONCRETE CONSTRUCTION:
- AMERICAN CONCRETE INSTITUTE (ACI)
- CONCRETE REINFORCING STEEL INSTITUTE (CRSI)
- PRECAST/PRESTRESSED CONCRETE INSTITUTE (PCI)

MASONRY CONSTRUCTION:
- AMERICAN CONCRETE INSTITUTE (ACI)
- THE MASONRY SOCIETY (TMS)
- STRUCTURAL ENGINEERING INSTITUTE (SEI)

STRUCTURAL AND MISCELLANEOUS STEEL WORK:
- AMERICAN INSTITUTE OF STEEL CONSTRUCTION (AISC)

STEEL JOIST, STEEL DECK, AND ACCESSORIES:
- STEEL JOIST INSTITUTE (SJI)
- STEEL DECK INSTITUTE (SDI)

COLD FORMED STEEL FRAMING & TRUSSES:
- AMERICAN IRON AND STEEL INSTITUTE (AISI)
- COLD FORMED STEEL ENGINEERS INSTITUTE (CFSEI)

CONTRACTOR SHALL ENSURE FAMILIARITY OF THE ABOVE ITEMS. INSPECTIONS AND OBSERVATIONS WILL BE IN CONFORMANCE WITH THE ABOVE.

1.1.3 DESIGN DATA:

OCCUPANCY CATEGORY	CATEGORY II
ROOF DEAD LOADS (D):	
STEEL ROOF	33.5 PSF
FLOOR LIVE LOADS (L):	
MANUFACTURING	
HEAVY	250 PSF
LIGHT	125 PSF
OFFICE BUILDINGS	
OFFICES	50 PSF
STORAGE WAREHOUSE	
HEAVY	250 PSF
LIGHT	125 PSF
MECHANICAL EQUIPMENT ROOMS	40 PSF + EQUIPMENT OR 70 PSF MINIMUM
WALKWAYS AND ELEVATED PLATFORMS	60 PSF
ROOF LIVE LOADS (Lr):	
ORDINARY FLAT, PITCHED, OR CURVED ROOF	20 PSF
SNOW LOADS (S):	
GROUND SNOW LOAD, Pg	30 PSF
EXPOSURE FACTOR, Ce	1.0
THERMAL FACTOR, Ct	1.0
IMPORTANCE FACTOR, Is	1.0
FLAT ROOF SNOW LOAD, Pf	21 PSF + DRIFT
ROOF SLOPE FACTOR, Cs	1.0
DESIGN ROOF SNOW LOAD, Ps	21 PSF + DRIFT
WIND LOADS (W) (METHOD 2, h<=60ft):	
BASIC WIND SPEED, V	90 MPH
IMPORTANCE FACTOR, Iw	1.0
EXPOSURE CATEGORY	C
ENCLOSURE CLASSIFICATION	ENCLOSED
INTERNAL PRESSURE COEFFICIENT, Gcpi	+/- 0.18
COMPONENTS AND CLADDING DESIGN PRESSURES:	

EFFECTIVE WIND AREAS*

	10 SF	50 SF	100 SF
ROOF ZONES*			
NEG. ZONE 1 (FIELD)	-14.6 PSF	-13.7 PSF	-13.3 PSF
NEG. ZONE 2 (PERIMETER)	-24.4 PSF	-18.4 PSF	-15.8 PSF
NEG. ZONE 3 (CORNER)	-36.8 PSF	-22.1 PSF	-15.8 PSF
POS. ZONE (ALL)	10.0 PSF	10.0 PSF	10.0 PSF
OVERHANG ZONE 1 & 2	-21.0 PSF	-20.1 PSF	-19.8 PSF
OVERHANG ZONE 3	-34.6 PSF	-17.3 PSF	-10.0 PSF
WALL ZONES*	10 SF	100 SF	500 SF
NEG. ZONE 4 (INTERIOR ZONE)	-14.4 PSF	-12.5 PSF	-11.1 PSF
NEG. ZONE 5 (CORNER ZONE)	-17.8 PSF	-13.9 PSF	-11.1 PSF
POS. ZONE 4 & 5	13.3 PSF	11.4 PSF	10.0 PSF

*NOTES:
- REFER TO ASCE 7-05, FIGURES 6-11A THRU 6-17 FOR ZONE DIAGRAMS.
- PLUS AND MINUS SIGNS INDICATE PRESSURES ACTING TOWARD OR AWAY FROM BUILDING SURFACES RESPECTIVELY.
- PRESSURES MAY BE INTERPOLATED BETWEEN THE EFFECTIVE WIND AREAS.

SEISMIC (E):	
IMPORTANCE FACTOR, Ie	1.0
0.2s MAPPED SPECTRAL RESPONSE ACCELERATION, Ss	10.20%g
1.0s MAPPED SPECTRAL RESPONSE ACCELERATION, S1	4.70%g
SITE CLASS	D
0.2s SPECTRAL RESPONSE COEFFICIENT, Sds	0.109
1.0s SPECTRAL RESPONSE COEFFICIENT, Sd1	0.069
SEISMIC DESIGN CATEGORY	B
STRUCTURAL SYSTEM	BUILDING FRAME SYSTEM
SEISMIC RESISTING SYSTEM	ORDINARY STEEL CONCENTRICALLY BRACED FRAMES
RESPONSE MODIFICATION COEFFICIENT, R	3.25
SYSTEM OVERSTRENGTH FACTOR, OMEGA	2.0
DEFLECTION AMPLIFICATION FACTOR, Cd	3.25
SEISMIC RESPONSE COEFFICIENT, Cs	0.033
ANALYSIS PROCEDURE	EQUIVALENT LATERAL FORCE ANALYSIS

1.1.4 DESIGN CRITERIA:

GEOTECHNICAL REPORT:
REFER TO GEOTECHNICAL ENGINEERING EXPLORATION AND ANALYSIS, PREPARED BY WISCONSIN TESTING LABORATORIES, REPORT #0317-16-601, DATED MARCH 31, 2016.

CONCRETE (NORMAL WEIGHT UNO):	
PILE CAPS	f'c = 3000 PSI
CIP WALLS AND PIERS	f'c = 4000 PSI
INTERIOR SLAB ON GRADE	f'c = 4000 PSI
EXTERIOR SLABS (UNREINFORCED)	f'c = 4500 PSI
EXTERIOR SLABS (REINFORCED)	f'c = 5000 PSI
MASONRY:	
CONCRETE MASONRY	
COMPRESSIVE STRENGTH OF MASONRY (UNIT STRENGTH METHOD)	f'm = 2000 PSI
LOAD BEARING CONCRETE UNIT, ASTM C90	
MORTAR, ASTM C270 TYPE M, S, OR N	
GROUT:	
MASONRY CORE FILL, ASTM C476	f'c = 2000 PSI
UNDER BASE PLATES, ASTM C1107 GRADE A, B, OR C	f'c = 7000 PSI
REINFORCEMENT STEEL:	
#3 BARS & LARGER, ASTM A615 GRADE 60	Fy = 60000 PSI
#3 BARS & LARGER WELDABLE, ASTM A706 GRADE 60	Fy = 60000 PSI
WELDED WIRE REINFORCEMENT, ASTM A1064	Fy = 65000 PSI
MASONRY JOINT REINFORCEMENT, ASTM A951	Fy = 80000 PSI
PRESTRESSED, ASTM A416 GRADE 270	Fy =270000 PSI
STRUCTURAL STEEL:	
ANGLE SHAPES & PLATES, ASTM A36	Fy = 36000 PSI
WIDE FLANGE SHAPES, ASTM A992	Fy = 50000 PSI
HSS TUBE SHAPES, ASTM A500 GRADE B	Fy = 46000 PSI
HSS ROUND SHAPE, ASTM A500 GRADE B	Fy = 42000 PSI
STEEL PIPE, ASTM A53 GRADE B	Fy = 35000 PSI
CHANNEL SHAPES, ASTM A572 GRADE 50	Fy = 50000 PSI
M, S AND HP SHAPES, ASTM A572 GRADE 50	Fy = 50000 PSI
STEEL DECKING:	
16-22GA ROOF DECK	Fy = 33000 PSI
0.6C-1.3C NON-COMPOSITE DECK	Fy = 60000 PSI
18-22GA COMPOSITE DECK	Fy = 50000 PSI
COLD FORMED STEEL:	
12-16GA MATERIAL, ASTM A1003, SS GRADE 50	Fy = 50000 PSI
18-20GA MATERIAL, ASTM A1003, SS GRADE 33	Fy = 33000 PSI
FASTENERS:	
WELDS	E70XX ELECTRODES
>=5/8" HIGH-STRENGTH BOLTS, ASTM A325-N	
<=1/2" DIA NON-HIGH STRENGTH BOLTS, ASTM A307	
ANCHOR BOLTS, ASTM F1554 GRADE 36	Fy = 36000 PSI
THREADED ROD, ASTM A193	Fy = 36000 PSI
NUTS AT STRUCTURAL BOLTS, ASTM A563 GRADE C	
WASHERS AT STRUCTURAL BOLTS, ASTM F436 TYPE 1	
WASHERS AT ANCHOR BOLTS, A36	Fy = 36000 PSI
HEADED SHEAR CONNECTOR STUDS, ASTM A108	
EXPANSION ANCHORS	KWIK-BOLT III BY HILTI, INC.
EPOXY ANCHORS	HIT HY-200 MAX BY HILTI, INC.
SCREW ANCHORS (3/16"-1/4")	KWIK-CON II BY HILTI, INC.
SCREW ANCHORS (3/8"-3/4")	KH-EZ BY HILTI, INC.
POWDER ACTUATED FASTENERS	X-DNI OR DS BY HILTI, INC.
STEEL DECKING FASTENERS	X-HSN24 BY HILTI, INC.
SELF-DRILLING SCREWS	TEKS BY ITW BUILDEX
WOOD SCREWS	SDS BY SIMPSON, INC.

1.1.5 EXECUTION: CONTRACTOR TO CROSS CHECK DIMENSIONS, ELEVATIONS, SECTIONS AND DETAILS BETWEEN ARCHITECTURAL, MECHANICAL AND STRUCTURAL PLANS. AMBROSE ENGINEERING IS TO BE NOTIFIED OF ANY VARIANCE THAT WILL AFFECT THE STRUCTURAL FRAMING BEFORE CONTRACTOR BEGINS WORK. ALL EQUIPMENT SUPPORTS AND ANCHORAGES TO BE CROSS CHECKED WITH MANUFACTURER'S DRAWINGS. CONTRACTORS SHALL VERIFY ALL PROFILES, HEIGHTS AND DIMENSIONS AT PROJECT SITE PRIOR TO FABRICATION OF ANY MATERIAL AND INFORM THE ENGINEER OF ANY DISCREPANCIES OR FRAMING INTERFERENCES.

1.1.6 PROJECT CONDITIONS: ALL EXISTING BUILDING DIMENSIONS AND CONDITIONS MUST BE FIELD VERIFIED PRIOR TO FABRICATION. AMBROSE ENGINEERING SHALL NOT BE RESPONSIBLE FOR ANY EXISTING INFORMATION SUPPLIED BY THE OWNER/ARCHITECT NOR BE LIABLE FOR THOSE EXISTING CONDITIONS THAT VARY FROM THE PREVIOUSLY GIVEN INFORMATION.

1.1.7 SHOP DRAWINGS/SUBMITTALS: SHALL BE SUBMITTED BY THE GENERAL CONTRACTOR TO THE ARCHITECT/ENGINEER FOR APPROVAL BEFORE FABRICATION MAY PROCEED.
SHOP DRAWINGS/SUBMITTALS SHALL BE PROVIDED FOR THE FOLLOWING COMPONENTS: CONCRETE DESIGN MIXES, REINFORCING STEEL, STRUCTURAL STEEL, STEEL DECKING, COLD FORMED STEEL FRAMING, LADDERS AND STAIRS, MICRO-PILE FOUNDATIONS, AND TEMPORARY RESISTANCE PIERS.
SEE SPECIFIC MATERIALS SECTIONS FOR ADDITIONAL INFORMATION.

NOTES:
- GENERAL CONTRACTOR SHALL REVIEW AND STAMP SHOP DRAWINGS BEFORE SUBMITTAL TO ARCHITECT/ENGINEER.
- SUBMIT (2) COPIES TO ARCHITECT/ENGINEER FOR REVIEW. (1) REVIEWED COPY WILL BE RETURNED. ANY ADDITIONAL SHOP DRAWING COPIES WILL NOT BE RETURNED.
- ALL SHOP DRAWINGS SHALL CONTAIN THE ISSUE DATE INDICATED ON THE CONSTRUCTION DOCUMENTS, ALONG WITH ANY ADDENDUMS OR REVISION DATES.
- COPIES OF THE STRUCTURAL DRAWINGS SUBMITTED AS SHOP DRAWINGS WILL BE REJECTED.
- ANY DEVIATIONS FROM THE CONTRACT DOCUMENTS SHALL BE NOTED (CLOUD, NOTE, ETC.) ON THE SHOP DRAWINGS SUBMITTED FOR APPROVAL.
- ANY CHANGES ON RESUBMITTED SHOP DRAWINGS SHALL BE CLOUDED.

1.1.8 DEFERRED COMPONENT SUBMITTALS: SHALL BE SUBMITTED BY THE GENERAL CONTRACTOR TO THE ARCHITECT/ENGINEER PRIOR TO CONSTRUCTION. DEFERRED SUBMITTALS SHALL BE PROVIDED FOR THE FOLLOWING COMPONENTS: COLD FORMED STEEL, LADDERS AND STAIRS, MICRO-PILE FOUNDATIONS, AND TEMPORARY RESISTANCE PIERS.

NOTES:
- GENERAL CONTRACTOR SHALL REVIEW AND STAMP THE DEFERRED SUBMITTALS BEFORE SUBMITTAL TO ARCHITECT/ENGINEER.
- SUBMIT (4) COPIES OF DRAWINGS AND CALCULATIONS TO ENGINEER. (3) COPIES WILL BE RETURNED WITH ENGINEER'S APPROVAL STAMP.
- ALL COMPONENT SUBMITTALS SHALL BEAR AN ORIGINAL SEAL AND SIGNATURE OF THE COMPONENT DESIGNER.
- ALL SUBMITTED COPIES MUST BE THE FINAL "FIELD USE" SETS WHICH INCLUDES ALL CORRECTIONS MADE DUE TO SHOP DRAWING REVIEW COMMENTS.

1.1.9 SPECIAL INSPECTIONS: AN INSPECTION & TESTING COMPANY SHALL BE RETAINED IN ACCORDANCE WITH THE IBC FOR THE FOLLOWING:

- SOILS AND EARTHWORK SUPPORTING FOUNDATIONS AND SLABS.
- CONCRETE TEST CYLINDERS AND STRENGTH TESTING.
- CONCRETE REINFORCEMENT.
- MASONRY PER ACI 530.1-05/ASCE 5-05/TMS 402-05 - 'SPECIFICATION FOR MASONRY STRUCTURES" TABLE 4 - LEVEL B QUALITY ASSURANCE.
- STRUCTURAL STEEL WELDED AND BOLTED CONNECTIONS.
- METAL DECK FASTENING.
- POST INSTALLED EXPANSION AND EPOXY ANCHORS.

1.1.10 CONSTRUCTION LOADS: PLACEMENT OF CONSTRUCTION EQUIPMENT, MATERIALS, AND PERSONNEL SHALL NOT EXCEED THE DESIGN LIVE LOAD OF THE STRUCTURE. CONCRETE SHALL CURE A MINIMUM OF 7 DAYS BEFORE THE APPLICATION OF CONSTRUCTION LOADS. IN ADDITION, EQUIPMENT PLACED ON FLOORS SHALL ALSO COMPLY WITH THE FOLLOWING:

FORKLIFT SPACING BETWEEN WHEELS ON AXLE IS NOT LESS THAN 38" c/c OR SCISSOR LIFT SPACING BETWEEN WHEELS ON AXLE IS NOT LESS THAN 25" c/c.

SLAB-ON-GRADE:	ALLOWABLE EQUIPMENT AXLE LOADS	
SLAB DEPTH	FORKLIFT	SCISSOR/PLATFORM LIFTS
4"	NONE	5,400 LBS
5"	9,600 LBS	6,800 LBS
>=6"	11,400 LBS	9,200 LBS

MODULUS OF SUBGRADE, k (MINIMUM) . . . . . 100 PCI

WHEN AXLE LOADS EXCEED THE VALUES LISTED ABOVE, OR WHEN WHEEL SPACING IS LESS THAN c/c SPACING, CONTACT ENGINEER PRIOR TO OPERATING UNAUTHORIZED EQUIPMENT.

1.1.11 FIELD MODIFICATIONS: MODIFICATIONS OF STRUCTURAL MEMBERS DUE TO MISLOCATION, MISFIT, MECHANICAL INTERFERENCE, OR ANY OTHER CONSTRUCTION ISSUE SHALL NOT BE MADE WITHOUT THE PRIOR APPROVAL OF ENGINEER. NO OPENING SHALL BE PLACED IN ANY STRUCTURAL MEMBER UNLESS SHOWN ON THE CONTRACT STRUCTURAL DRAWINGS OR THE APPROVED SHOP DRAWINGS.

1.1.12 PERMANENT EQUIPMENT: SHALL BE LOCATED ONLY ON THE STRUCTURAL MEMBERS INTENDED TO SUPPORT THIS EQUIPMENT AS SHOWN ON THE CONTRACT DRAWINGS OR THE APPROVED SHOP DRAWINGS. IF STRUCTURAL SUPPORT IS NOT CLEAR, OR A QUESTION ARISES, CONTACT ENGINEER PRIOR TO EQUIPMENT INSTALLATION.

2.1 EARTHWORK:

2.1.1 GEOTECHNICAL REPORT: REFER TO GEOTECHNICAL REPORT INDICATED IN DESIGN CRITERIA FOR SITE CONDITIONS, SUITABLE BEARING MATERIALS, STRUCTURAL FILL, BACKFILL MATERIALS, COMPACTION REQUIREMENTS AND PROJECT SPECIFICATIONS FOR EARTHWORK NOT SPECIFIED HEREIN.

2.1.2 EXCAVATIONS: ALL UNSUITABLE EXISTING FILL AND TOPSOIL SHALL BE EXCAVATED BELOW FOOTING BEARING AND REPLACED IN ACCORDANCE WITH THE GEOTECHNICAL REPORT RECOMMENDATIONS. IF EXCAVATIONS SHOULD INDICATE A SAFE SOIL BEARING CAPACITY LESS THAN THE DESIGN CRITERIA SOIL BEARING CAPACITY THE ENGINEER SHALL BE NOTIFIED IMMEDIATELY AND FOUNDATION REVISED TO MEET THIS CONDITION.

2.1.3 SITE PREPARATION: ALL UNSUITABLE EXISTING FILL AND TOPSOIL SHALL BE EXCAVATED WITHIN THE BUILDING FOOTPRINT AND REPLACED TO FINISHED PAD ELEVATION IN ACCORDANCE WITH THE GEOTECHNICAL REPORT RECOMMENDATIONS. PROVIDE COMPACTED AGGREGATE SUB-BASE AND VAPOR RETARDER ABOVE PAD AND BELOW SLAB PER SPECIFICATIONS AND GEOTECHNICAL REPORT RECOMMENDATIONS.

2.1.4 BACKFILLING: BACKFILL EACH SIDE OF FOUNDATION WALLS IN EQUAL LIFTS. WHERE FINAL GRADES CREATE AN UNBALANCED CONDITION BACKFILL AS FOLLOWS: AT FOUNDATIONS WALLS STRUCTURALLY CONNECTED TO SLABS (SUCH AS DOCK WALLS), BRACE TOP OF WALL UNTIL SLAB IS IN PLACE AND CURED 7 DAYS MINIMUM. AT BASEMENT WALLS DO NOT BACKFILL UNTIL FIRST FLOOR CONSTRUCTION IS COMPLETE OR TOP OF WALLS ARE BRACED. WHERE WALLS ARE NOT STRUCTURALLY CONNECTED AT THE TOP (SUCH AS RETAINING WALLS) BRACING IS NOT REQUIRED.

2.2 MICRO PILES

2.2.1 GENERAL: MICRO-PILES SHALL BE INSTALLED USING A ROD SIZE OUTSIDE DIAMETER OF 40 MM AND AN INSIDE DIAMETER OF 16 MM.

2.2.2 MICRO-PILE RODS SHALL BE EMBEDED IN SHALLOW BED ROCK LAYER TO DEVELOP A COMPRESSION CAPACITY OF NOT LESS THAN 37.0 KIPS AND A TENSION CAPACITY OF NOT LESS THAN 34.0 KIPS.

2.2.3 SUBMIT STRUCTURAL CALCULATIONS FOR THE MICRO-PILE DESIGN WITH A GEOTECHNICAL CAPACITY FACTOR OF SAFETY NOT LESS THAN 3.0.

2.2.4 SUBMIT SHOP DRAWINGS INDICATING ROD SIZE, YIELD STRENGTH, LOCATION PLAN AND EMBEDMENT DEPTH.

2.2.5 FURNISH CAP PLATES OF SIZE INDICATED AT ELEVATIONS.

3.1 CONCRETE:

3.1.1 REFERENCES: CONCRETE CONSTRUCTION SHALL COMPLY WITH THE FOLLOWING STANDARDS AND AS MODIFIED HEREIN:

ACI 117 "SPECIFICATIONS FOR TOLERANCES FOR CONCRETE CONSTRUCTION AND MATERIALS"
ACI 301 "SPECIFICATIONS FOR STRUCTURAL CONCRETE"
ACI SP-66 "ACI DETAILING MANUAL"
ACI 318 "BUILDING CODE REQUIREMENTS FOR STUCTURAL CONCRETE"
ACI 347 "GUIDE TO FORMWORK FOR CONCRETE"
ACI 360 "GUIDE TO DESIGN OF SLABS-ON-GROUND"
CRSI "MANUAL OF STANDARD PRACTICE"
CRSI "PLACING REINFORCING BARS"

3.1.2 MATERIALS: PROPORTION CONCRETE MATERIALS TO ATTAIN 28 DAY CONCRETE MIX DESIGN STRENGTHS INDICATED IN THE DESIGN CRITERIA. SEE SPECIFICATIONS FOR ADDITIONAL MATERIAL REQUIREMENTS.

3.1.3 SHOP DRAWINGS/SUBMITTALS: SUBMIT CONCRETE MIX DESIGNS, COMPRESSIVE STRENGTH TEST HISTORY, CEMENT, FLY ASH, AGGREGATE TEST REPORTS, ADMIXTURES, FIBER REINFORCING, REBAR PLACEMENT AND FABRICATION PLANS, LAP LENGTHS, REBAR BENDING DIAGRAMS, AND ALL DETAILS AS REQUIRED TO COMPLETE INSTALLATION.

3.1.4 ACCESSORIES: ALL CONCRETE ACCESSORIES SUCH AS CHAIRS, TIES, ETC., THAT COME IN CONTACT WITH FORMWORK ON EXPOSED CONCRETE SHALL BE GALVANIZED OR PLASTIC COATED. CONCRETE BLOCK OR CLAY MASONRY SHALL NOT BE USED AS CHAIRS FOR SUPPORT OF SLAB-ON-GRADE REINFORCEMENT.

3.1.5 WELDED WIRE REINFORCEMENT: PROVIDE WELDED WIRE REINFORCEMENT IN ACCORDANCE WITH THE DESIGN CRITERIA. WELDED WIRE REINFORCEMENT SHALL BE FLAT SHEETS ONLY, LAPPED 6" MINIMUM AND POSITIONED AT MID-HEIGHT OF THE SLAB THICKNESS, UNO.

3.1.6 SYNTHETIC FIBER REINFORCEMENT: PROVIDE SYNTHETIC FIBER REINFORCEMENT IN ACCORDANCE WITH THE PROJECT SPECIFICATIONS AT THE DOSAGE RATE INDICATED ON THE PLANS.

3.1.7 BAR REINFORCEMENT: PROVIDE BAR REINFORCEMENT IN ACCORDANCE WITH THE DESIGN CRITERIA. WHEN BAR REINFORCEMENT IS CALLED FOR IN A CERTAIN PORTION OF THE BUILDING, IT SHALL BE DUPLICATED IN SIMILAR PORTIONS OF THE BUILDING, UNO.

3.1.8 MINIMUM COVER: INSTALL BAR REINFORCEMENT WITH THE FOLLOWING MINIMUM COVER UNLESS A GREATER COVER IS REQUIRED DUE TO FIRE PROTECTION:

CONCRETE CAST AGAINST AND PERMANENTLY EXPOSED TO EARTH . . . . . 3"
CONCRETE EXPOSED TO EARTH AND WEATHER:
#6 BAR AND SMALLER . . . . . 1 1/2"
#6 BAR AND LARGER . . . . . 2"
CONCRETE NOT EXPOSED TO EARTH AND WEATHER OR IN CONTACT WITH GROUND:
SLABS, WALLS, AND JOISTS:
#11 BAR AND SMALLER . . . . . 3/4"
BEAMS AND COLUMNS:
#11 BAR AND SMALLER . . . . . 1 1/2"

3.1.9 DEVELOPMENT: THE MINIMUM DEVELOPMENT LENGTH OF NON-CONTINUOUS BAR REINFORCEMENT IS SHOWN BELOW. TERMINATE WITH A STANDARD HOOK IN ACCORDANCE WITH ACI IF REQUIRED DEVELOPMENT LENGTH CANNOT BE OBTAINED. THE LAP SPLICE LENGTH OF CONTINUOUS BAR REINFORCEMENT IS SHOWN BELOW. IN GROUPS OF PARALLEL BARS, LAP SPLICES SHALL BE STAGGERED.

	DEVELOPMENT LENGTH	LAP SPLICE LENGTH
f'c = 3000 PSI, GRADE 60, UNCOATED:		
ALL BARS (EXCEPT TOP HORIZ. BARS):		
#6 BAR AND SMALLER	44 BAR DIAMETERS	57 BAR DIAMETERS
#7 BAR AND LARGER	55 BAR DIAMETERS	71 BAR DIAMETERS
TOP HORIZONTAL BARS:		
#6 BAR AND SMALLER	57 BAR DIAMETERS	74 BAR DIAMETERS
#7 BAR AND LARGER	71 BAR DIAMETERS	93 BAR DIAMETERS
f'c = 4000 PSI, GRADE 60, UNCOATED:		
ALL BARS (EXCEPT TOP HORIZ. BARS):		
#6 BAR AND SMALLER	38 BAR DIAMETERS	50 BAR DIAMETERS
#7 BAR AND LARGER	47 BAR DIAMETERS	62 BAR DIAMETERS
TOP HORIZONTAL BARS:		
#6 BAR AND SMALLER	50 BAR DIAMETERS	64 BAR DIAMETERS
#7 BAR AND LARGER	62 BAR DIAMETERS	80 BAR DIAMETERS

3.1.10 HOT WEATHER CONCRETING: FOLLOW ACI 305 "HOT WEATHER CONCRETING" WHEN MAXIMUM DAILY TEMPERATURE EXCEEDS 85°F, OR RAPID DRYING CONDITIONS EXIST; EVAPORATION RATE > .15 LB/SF/HR PER FIGURE 2.1.5.

3.1.11 COLD WEATHER CONCRETING: FOLLOW ACI 306 "COLD WEATHER CONCRETING' WHEN FREEZING CONDITIONS OR MEAN DAILY TEMPERATURE FALLS BELOW 40°F.

3.1.12 SLABS: MAY BE POURED AS A CONTINUOUS SCREEDED POUR WITH SAW CUT CONTROL JOINTS IN BOTH DIRECTIONS. SAW CUTS TO BE MADE WITHIN 8 HOURS OF POUR AND SPACED AS INDICATED IN THE DRAWINGS.

3.1.13 WALLS: MAXIMUM POUR LENGTH 100 FT BETWEEN FORMED CONSTRUCTION JOINTS. FOR WALLS EXPOSED TO VIEW PROVIDE INTERMEDIATE CONTROL JOINTS NO GREATER THAN 30 FT ON CENTER. JOINTS SHOULD ALIGN WITH BUILDING CONTROL JOINTS WHEN PRESENT AND COORDINATED WITH ARCHITECTURAL DRAWINGS.

3.1.14 OPENINGS: CONTRACTOR TO PROVIDE AND COORDINATE WITH ALL OTHER TRADES FOR SIZE AND LOCATIONS OF ANY AND ALL OPENINGS, SLEEVES, ETC. OCCURRING IN WALLS, FOOTINGS, AND FLOORS. SLEEVE LAYOUTS SHALL BE SUBMITTED FOR APPROVAL PRIOR TO CONSTRUCTION.

3.1.15 BOND BREAKER: PROVIDE BOND BREAKER MATERIAL WHERE SLABS ABUT WALLS, COLUMNS AND OTHER VERTICAL SURFACES.

4.1 MASONRY:

4.1.1 REFERENCES: MASONRY CONSTRUCTION SHALL CONFORM TO THE FOLLOWING STANDARDS AND AS MODIFIED HEREIN:

TMS 402/ACI 530/ASCE 5 "BUILDING CODE REQUIREMENTS FOR MASONRY STRUCTURES"
TMS 602/ACI 530.1/ASCE 6 'SPECIFICATIONS FOR MASONRY STRUCTURES"
TEK MANUAL "NATIONAL CONCRETE MASONRY ASSOCIATION"

4.1.2 MATERIALS: SELECT MASONRY MATERIALS TO ATTAIN NET AREA COMPRESSIVE STRENGTH INDICATED IN THE DESIGN CRITERIA BASED ON THE UNIT STRENGTH METHOD. SEE SPECIFICATIONS FOR ADDITIONAL MATERIAL REQUIREMENTS.

4.1.3 HORIZONTAL JOINT REINFORCEMENT: PROVIDE STANDARD GALVANIZED LADDER TYPE REINFORCEMENT FABRICATED OF 9 GAUGE WIRE. PLACE AT EVERY SECOND BLOCK COURSE, 16 INCHES ON CENTER VERTICALLY, IN ALL WALLS UNLESS NOTED OTHERWISE. INSTALL REINFORCEMENT IN THE FIRST AND SECOND JOINTS, 8 INCHES ON CENTER VERTICALLY, IMMEDIATELY ABOVE AND BELOW OPENINGS. EXTEND REINFORCEMENT A MINIMUM OF 2 FEET BEYOND JAMBS.

4.1.4 REBAR POSITIONERS: PROVIDE GALVANIZED REBAR POSITIONERS FABRICATED OF 9 GAUGE WIRE AT ALL VERTICAL REINFORCING NOT TIED. PLACE AT TOP OF FIRST COURSE, ONE COURSE BELOW TOP OF WALL, AND AT A VERTICAL SPACING NOT TO EXCEED 200 BAR DIAMETERS.

4.1.6 BOND BEAM REINFORCEMENT: SHALL BE REINFORCED WITH 2 #4 BARS CONTINUOUS, EXCEPT AT CONTROL JOINTS. LAP BOND BEAMS A MINIMUM OF 4'-0" AT VERTICAL STEPS IN BOND BEAM COURSES. LAP CONTINUOUS BARS 48 DIAMETERS AT ALL SPLICES.

4.1.7 VERTICAL WALL REINFORCEMENT: LOCATE WALL REINFORCEMENT AT CENTER OF WALL UNLESS NOTED OTHERWISE. LAP CONTINUOUS BARS 48 DIAMETERS AT ALL SPLICES.

4.1.8 VERTICAL PIER REINFORCEMENT: LOCATE PIER REINFORCEMENT WITHIN CELL AS INDICATED IN THE DRAWINGS. LAP CONTINUOUS BARS 48 DIAMETERS AT ALL SPLICES.

4.1.9 GROUTING: ALL CELLS AND BOND BEAMS CONTAINING REINFORCING SHALL BE GROUTED. ALL CELLS BELOW SLAB ON GRADE OR EXTERIOR GRADE SHALL BE GROUTED. GROUT IN 4 FOOT HIGH MAXIMUM LIFTS, HIGH LIFT GROUTING SHALL NOT BE USED.

4.1.10 CONTROL JOINTS: CONSTRUCT EXTERIOR JOINTS AT A MAXIMUM HORIZONTAL SPACING BETWEEN JOINTS OF 24'-0" AND NOT MORE THE 12'-0" FROM CORNERS. SEE ARCHITECTURAL DRAWINGS FOR EXACT LOCATION. CONSTRUCT INTERIOR CONTROL JOINTS IN WALLS AS PLACED PERPENDICULAR TO BEAMS OR BEARING WALLS AND NOT MORE THAN 32'-0" ON CENTER OR 16'-0" FROM CORNERS. NO JOINTS SHALL BE LOCATED WITHIN 2'-0" OF STEEL BEAM BEARINGS.

4.1.11 PROVIDE FLEXIBLE MASONRY JOINTS AT ALL SIDES OF STEEL BEAMS AND/OR STEEL JOISTS THAT PENETRATE NON-BEARING MASONRY WALLS. MAINTAIN A MINIMUM 1-1/2 INCH CLEAR DISTANCE BETWEEN THE STEEL AND MASONRY.

4.1.12 ALL MASONRY WALLS HAVING TWO OR MORE WYTHES OF BRICK AND/OR CONCRETE BLOCK SHALL HAVE ALL VERTICAL COLLAR JOINTS FILLED WITH MORTAR FOR THEIR FULL HEIGHT. PARGING IS NOT ACCEPTABLE. THIS REQUIREMENT DOES NOT APPLY BETWEEN WYTHES OF CAVITY WALLS.

4.1.13 TEMPORARY BRACING: ALL MASONRY WALLS SHALL BE BRACED IN ACCORDANCE WITH OSHA GUIDELINES AND "THE STANDARD PRACTICE FOR BRACING MASONRY WALLS UNDER CONSTRUCTION' UNTIL PERMANENT SUPPORT HAS BEEN INSTALLED.

4.1.14 IN NO CASE SHALL SHORES OR FORMS BE REMOVED, OR CONCENTRATED LOADS FROM FRAMING MEMBERS BE APPLIED, UNTIL THE MORTAR HAS CURED SUFFICIENTLY TO CARRY ITS OWN WEIGHT AND ALL OTHER ANTICIPATED LOADS.

4.1.15 ALL EMBEDDED STEEL BEAMS SHALL HAVE ADJUSTABLE MASONRY ANCHORS SPACED NOT GREATER THAN 16 INCHES VERTICALLY, AND 24 INCHES HORIZONTALLY, UNLESS OTHERWISE NOTED.

4.1.16 PROVIDE POCKETS IN MASONRY WALLS FOR STEEL BEAMS AND COLUMN BASE PLATES WHERE REQUIRED. BACK PATCH SOLID WITH CONCRETE AFTER INSTALLATION OF MEMBER.

4.1.17 WHERE NO MASONRY PIERS ARE INDICATED BELOW STRUCTURAL MEMBERS SUPPORTED BY MASONRY, PROVIDE A MINIMUM OF THREE COURSES OF CONCRETE BRICK OR APPROVED EQUIVALENT BEARING.

4.1.18 IN MASONRY BEARING WALLS, NO CHASES, RISERS, CONDUIT OR TOOTHING OF MASONRY SHALL OCCUR WITHIN 1'-6" OF CENTERLINE OF BEAM BEARING OR LOAD CONCENTRATION.

4.1.19 COLD WEATHER MASONRY CONSTRUCTION AND ITS QUALITY CONTROL REQUIRE ADDITIONAL ATTENTION TO CONSTRUCTION PRACTICES AND PROTECTION. ATTENTION SHOULD BE DIRECTED TO THE FOLLOWING DETAILS AS WELL AS THOSE NORMALLY ATTENDED.

1. CONSTRUCTION MATERIALS SHOULD BE RECEIVED, STORED, AND PROTECTED IN WAYS THAT PREVENT WATER FROM ENTERING THE MATERIALS.
2. IF CLIMATIC CONDITIONS WARRANT, TEMPERATURES OF CONSTRUCTION MATERIALS SHOULD BE MEASURED. FROZEN SAND AND WET MASONRY UNITS MUST BE THAWED. MASONRY UNITS BELOW 20°F MUST BE HEATED ABOVE 20°F WITHOUT OVERHEATING.
3. SUFFICIENT MORTAR INGREDIENTS SHOULD BE HEATED TO PRODUCE MORTAR TEMPERATURES BETWEEN 40°F AND 120°F. EVERY EFFORT SHOULD BE MADE TO PRODUCE CONSECUTIVE BATCHES OF MORTAR WITH THE SAME TEMPERATURES FALLING WITHIN THIS RANGE. THE MORTAR TEMPERATURE AFTER MIXING AND BEFORE USE SHOULD BE ABOVE 40°F, MAINTAINABLE EITHER BY AUX

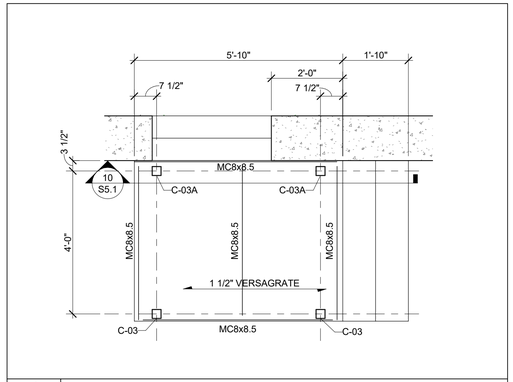

1 ENLARGED STAIR FRAMING PLAN

S1.1 SCALE: 1/2" = 1'-0"

CONCRETE PIER SCHEDULE

MARK	SIZE	VERT REINF	TIES
CP-01	18"x18" CONC	(4) #6	#3 @ 12" OC

- PROVIDE DOWELS INTO FOOTING SAME SIZE AND QUANTITY AS PIER VERTICALS.

COLUMN SCHEDULE - AMMONIA REF EXP

MARK	SIZE	BASE PLATE	ANCHOR BOLTS
C-01	HSS8x8x1/4	PL3/4x14x1'-2"	(4) 1"
C-02	HSS3x3x1/4	PL3/4x3 1/2x0'-6"	-----
C-03	HSS3x3x1/4	PL3/4x12x1'-0"	(4) 5/8" S.S. EXP ANCH
C-03A	HSS3x3x1/4	PL3/4x12x1'-0"	(4) 5/8" S.S. EXP ANCH

- PROVIDE 1/4" SETTING PLATE SAME SIZE AS BASE PLATE.
- ANCHOR BOLT EMBEDMENT: 12 x (BOLT DIAMETER).
- PROVIDE PLATE WASHER w/ NUT TOP AND BOTTOM. TACK WELD NUTS TO BOLT.

PIER CAP SCHEDULE

MARK	NUMBER OF PILES	DIMENSIONS			BOTTOM REINFORCING		TOP REINFORCING	
		LENGTH	WIDTH	THICKNESS	LENGTH	WIDTH	LENGTH	WIDTH
PC-01	4	3'-0"	3'-0"	2'-0"	(6) #5	(6) #5	(6) #5	(6) #5
PC-02	6	4'-6"	3'-0"	2'-0"	(5) #6	(7) #6	(5) #6	(7) #6

EXISTING CONDITION NOTES

1. ALL EXISTING CONDITIONS TO BE FIELD MEASURED AND FIELD VERIFIED PRIOR TO FABRICATION OR CONSTRUCTION. IN CASE OF DISCREPANCY BETWEEN PLANS & FIELD CONDITIONS NOTIFY ENGINEER. DO NOT PROCEED UNTIL THE CONDITIONS ARE RESOLVED.

2. CONTRACTORS ARE RESPONSIBLE FOR CORRECT AND COMPLETE USE OF INFORMATION PROVIDED IN CONSTRUCTION DOCUMENTS. IN CASE OF MISSING INFORMATION OR DISCREPANCY NOTIFY ENGINEER. DO NOT PROCEED UNTIL THE CONDITIONS ARE RESOLVED.

CONCRETE FOUNDATION NOTES

1. FINISHED FLOOR - EL 97'-4"
   (unless noted otherwise)
2. TOP OF FOOTINGS
   EXTERIOR - EL 94'-6"
   (unless noted otherwise)
3. (xx'-x") INDICATES TOP OF FOOTING ELEVATIONS.
4. [xx'-x"] INDICATES TOP OF PIER ELEVATIONS.
5. WALL FOOTINGS
   INTERIOR - 2'-0" x 10" w/ (3) #5 CONT
   (unless noted otherwise)
   EXTERIOR - 2'-0" x 10" NO REINF
   (unless noted otherwise)
   STOOPS - 1'-4" x 8" NO REINF
   (unless noted otherwise)
6. PROVIDE (2) #4 TOP BARS IN WALL FOOTINGS AT ALL OPENINGS 6'-0" OR GREATER.
7. CONCRETE FOUNDATION WALL REINFORCING
   (2) #5 CONT TOP AND BOTTOM
   (unless noted otherwise)
8. STOOP SLABS
   5" SLAB w/ #4 @ 12" OC EACH WAY
   (UP TO 5'-0" SPAN)
9. SEE ARCH PLANS FOR LOCATION OF NON-BEARING WALLS.

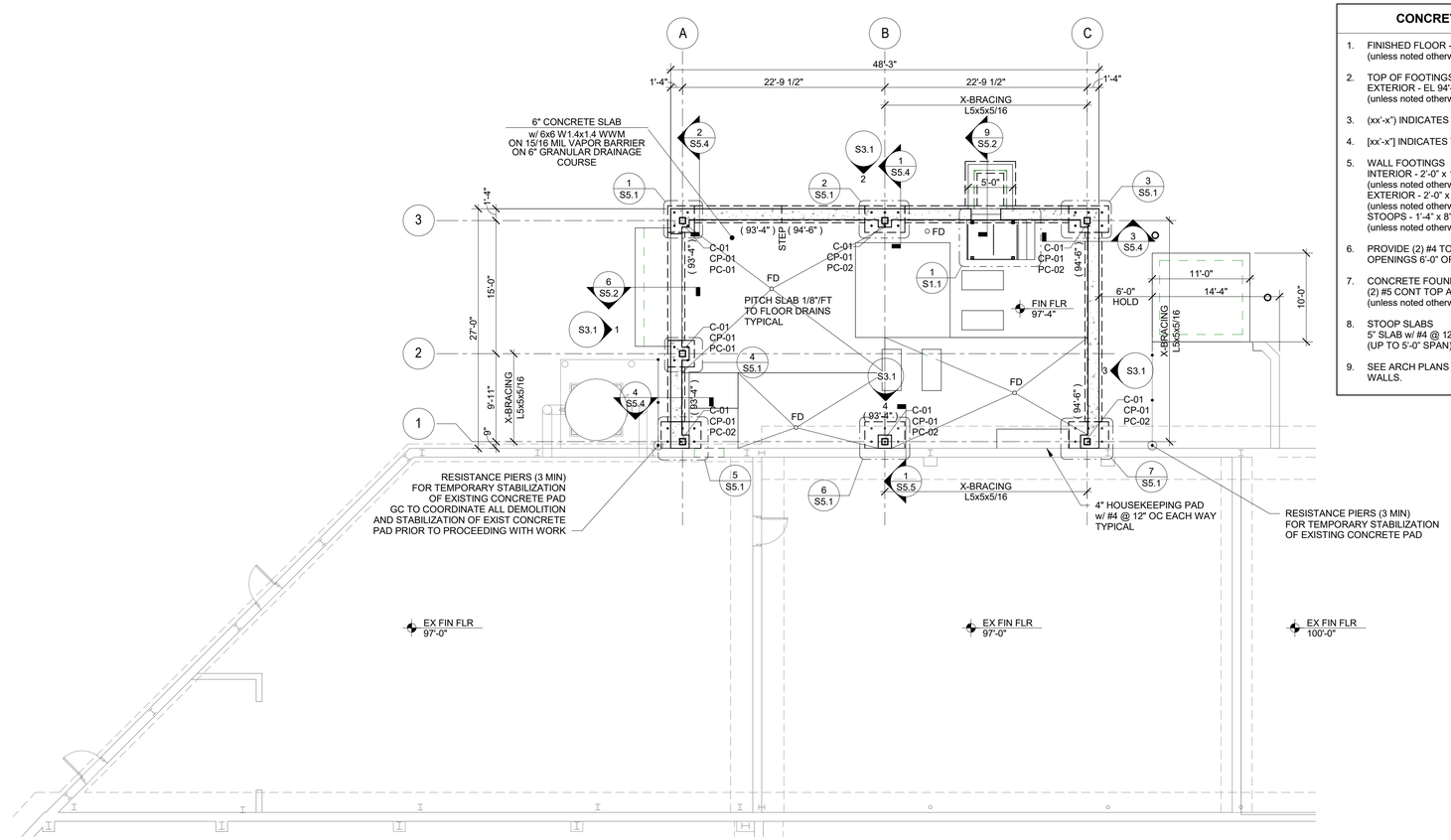

NORTH

FOUNDATION PLAN

SCALE: 1/8" = 1'-0"

GehlFoods
N116 W15970 Main Street
Germantown, WI
262.251.8570

IN ASSOCIATION WITH:

AMBROSE ENGINEERING
PHONE: 262-377-7602
AE PROJECT# 018.050.01

Author: LI
Edited By: LI
Date Created:
Type:
Notes:

Seal / Signature

WISCONSIN THOMAS J. DEKKER E-16974 MILWAUKEE WI PROFESSIONAL ENGINEER
4-6-18

Sheet Title: FOUNDATION PLAN
Project: AMMONIA CONDENSER ADDITION
Description: AMMONIA CONDENSER ADDITION
Datastream ID:
Datastream Description:

Edit Date: 04/06/18
Edit Time:
Version Author: LI
Version Editor: LI
Drawing No.
S1.1

4/6/2018 9:02:40 AM C:\Revit Local\Revit 2017\018-050 Gehl Foods - Overall_Structural (illocal)_2017.rvt

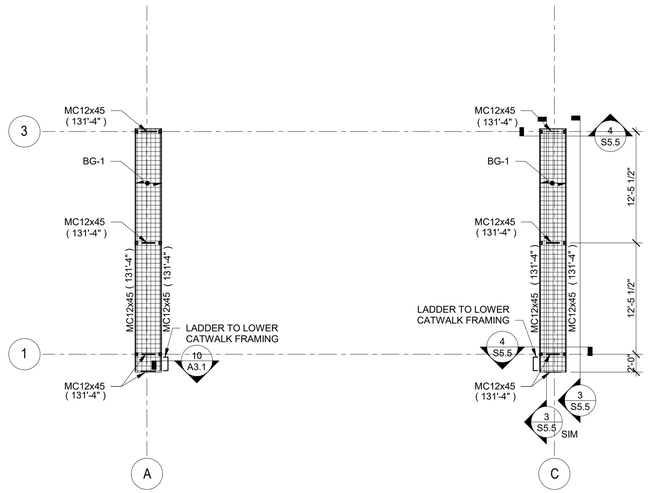

NORTH

UPPER CATWALK FRAMING PLAN

SCALE: 1/8" = 1'-0"

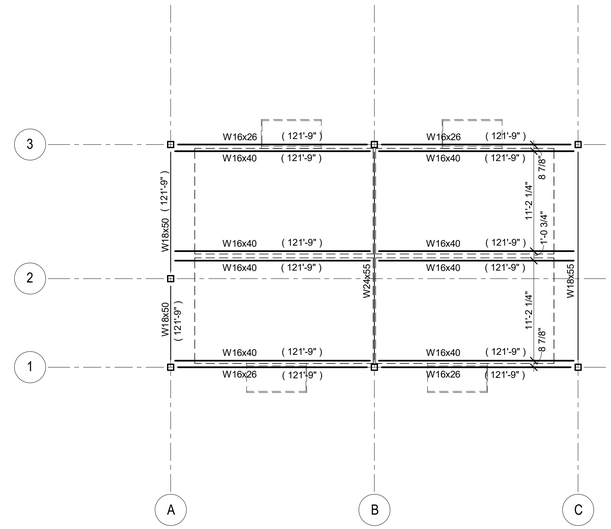

NORTH

CONDENSER SUPPORT FRAMING PLAN

SCALE: 1/8" = 1'-0"

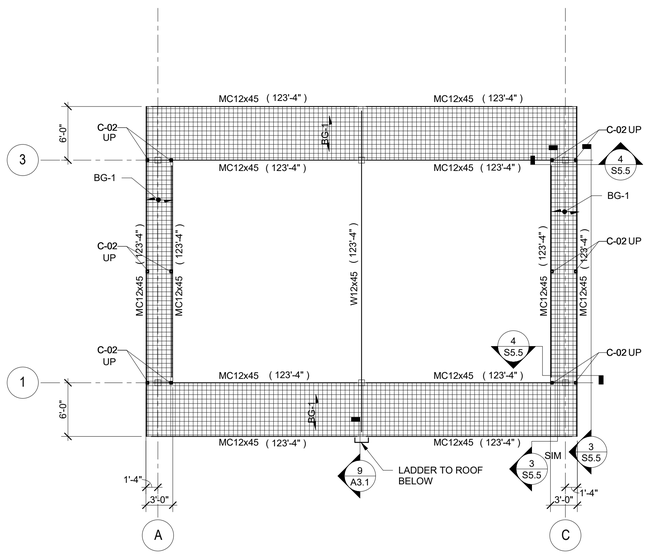

NORTH

LOWER CATWALK FRAMING PLAN

SCALE: 1/8" = 1'-0"

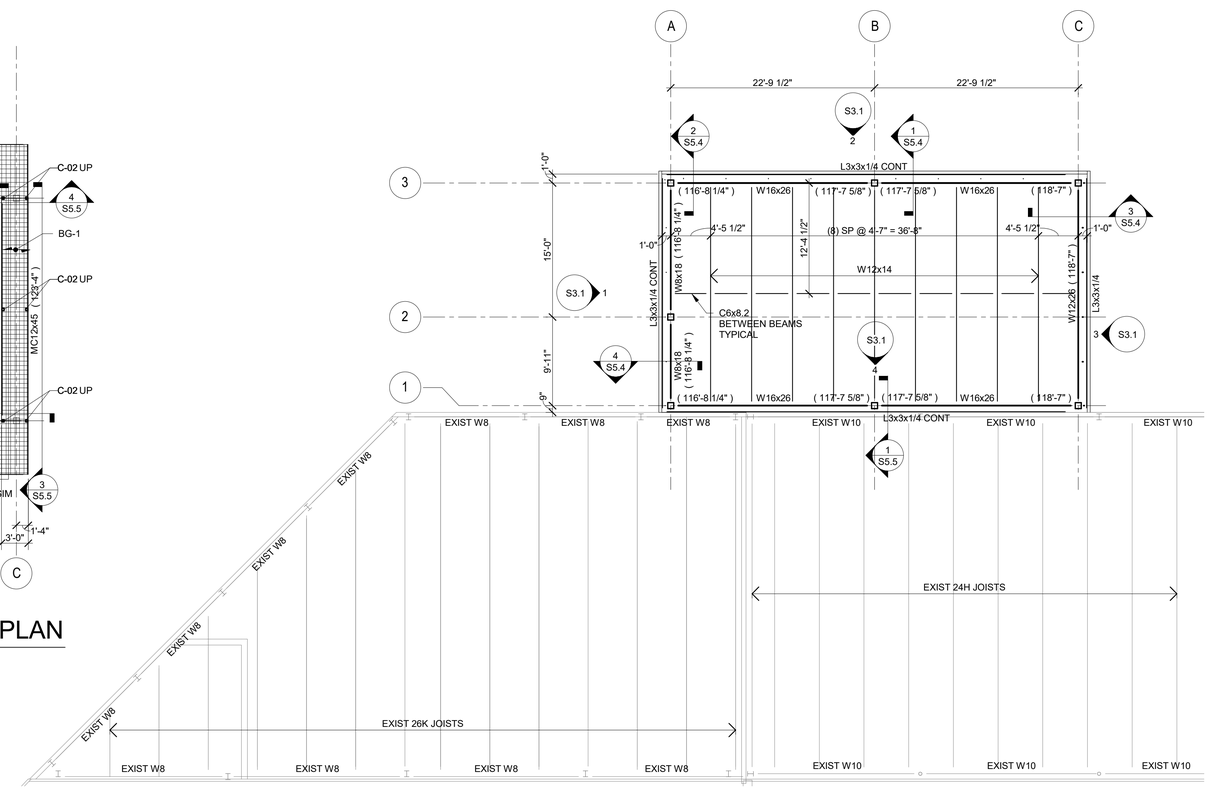

NORTH

ROOF FRAMING PLAN

SCALE: 1/8" = 1'-0"

EXISTING CONDITION NOTES

1. ALL EXISTING CONDITIONS TO BE FIELD MEASURED AND FIELD VERIFIED PRIOR TO FABRICATION OR CONSTRUCTION. IN CASE OF DISCREPANCY BETWEEN PLANS & FIELD CONDITIONS NOTIFY ENGINEER. DO NOT PROCEED UNTIL THE CONDITIONS ARE RESOLVED.
2. CONTRACTORS ARE RESPONSIBLE FOR CORRECT AND COMPLETE USE OF INFORMATION PROVIDED IN CONSTRUCTION DOCUMENTS. IN CASE OF MISSING INFORMATION OR DISCREPANCY NOTIFY ENGINEER. DO NOT PROCEED UNTIL THE CONDITIONS ARE RESOLVED.

ROOF FRAMING NOTES

1. 1 1/2" ROOF DECK: 22 GA - TYPE B, MECH FASTENED (unless noted otherwise)
   SEE 2 / S5.3 FOR FASTENING PATTERN
2. DECK LAYOUT MUST BE 3-SPAN MINIMUM.
3. (xxx"-x") INDICATES TOP OF STEEL ELEVATIONS.
4. Q_{snow} = XXX PSF INDICATES THE MAXIMUM SNOW LOAD AT THE DRIFT AREA SHOWN
5. ROOF OPENINGS - VERIFY ALL SIZES AND LOCATIONS WITH MECHANICAL DRAWINGS.
6. PROVIDE L3x3x1/4 FRAME AT ALL SUMP PANS AND ROOF OPENINGS BETWEEN JOISTS SPACED LESS THAN OR EQUAL TO 5'-6" OC. SEE 3 / S5.3
7. PROVIDE L4x4x1/4 FRAME AT ALL ROOF OPENINGS BETWEEN JOISTS SPACED GREATER THAN 5'-6" OC. SEE 3 / S5.3
8. BEARING PLATES
   BP-01 PL1/2x7x0'-7" w/ (2) 1/2"x6" ANCH
   BP-02 PL3/4x7x1'-0" w/ (2) 1/2"x8" ANCH
   BP-03 PL3/8x5x0'-7" w/ (2) 1/2"x4" ANCH
9. BG-1: HOT DIPPED GALVANIZED 1-1/2"x3/16" BAR GRATING w/ BEARING BARS @ 1 3/16" OC

GehlFoods
N116 W15970 Main Street
Germantown, WI
262.251.8570

IN ASSOCIATION WITH:

AMBROSE ENGINEERING
PHONE: 262-377-7602
AE PROJECT# 018.050.01

Author: LI
Edited By: LI
Date Created:
Type:
Notes:

Seal / Signature

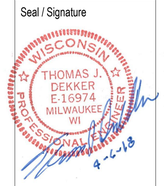

Sheet Title: FRAMING PLANS
Project: AMMONIA CONDENSER ADDITION
Description: AMMONIA CONDENSER ADDITION
Datastream ID:
Datastream Description:

Edit Date: 04/06/18
Edit Time:
Version Author: LI
Version Editor: LI

Drawing No.
S1.2

4/6/2018 9:02:41 AM C:\Revit Local\Revit 2017\018-050 Gehl Foods - Overall_Structural (illocal)_2017.rvt

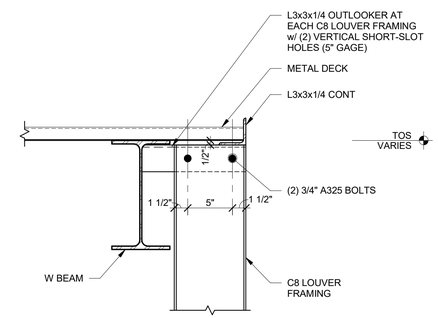

5 CONNECTION DETAIL

S3.1 SCALE: 1 1/2" = 1'-0"

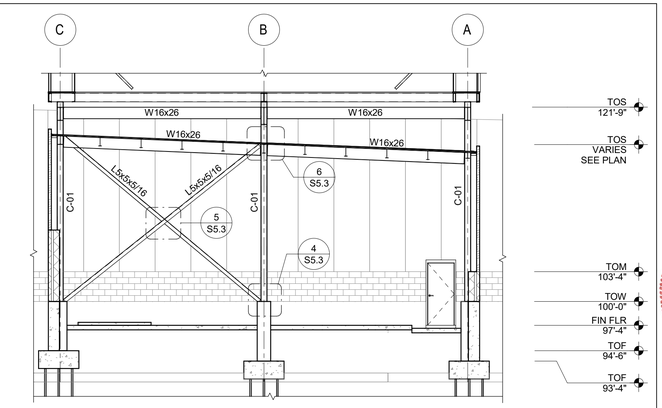

4 WEST WALL ELEVATION

S3.1 SCALE: 1/8" = 1'-0"

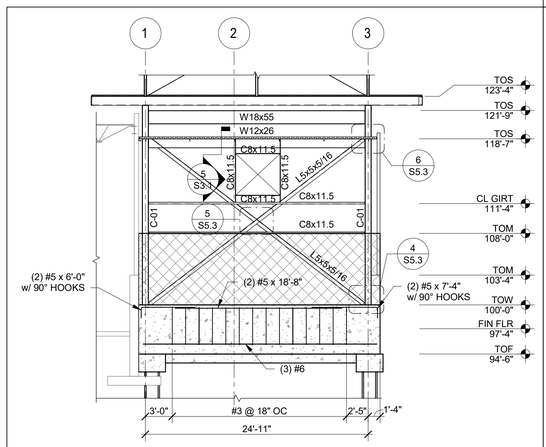

3 SOUTH WALL ELEVATION

S3.1 SCALE: 1/8" = 1'-0"

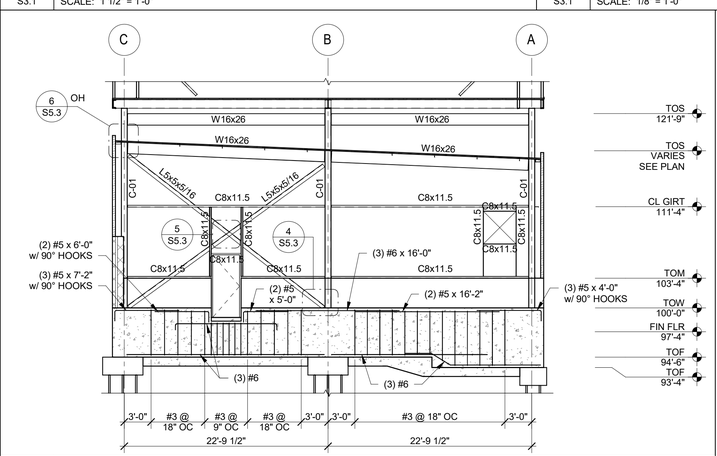

2 EAST WALL ELEVATION

S3.1 SCALE: 1/8" = 1'-0"

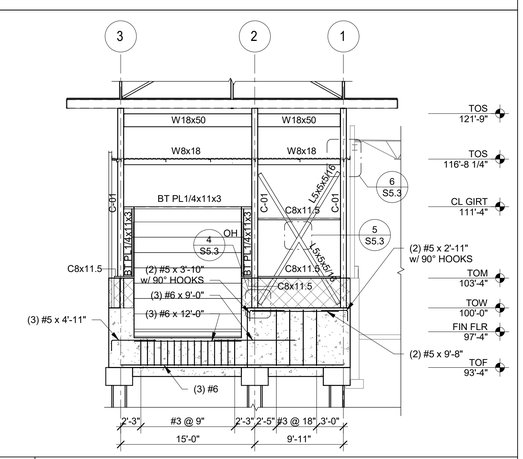

1 NORTH WALL ELEVATION

S3.1 SCALE: 1/8" = 1'-0"

GehlFoods
N116 W15970 Main Street
Germantown, WI
262.251.8570

IN ASSOCIATION WITH:

AMBROSE ENGINEERING
PHONE: 262-377-7602
AE PROJECT# 018.050.01

Author: LI
Edited By: LI
Date Created:
Type:
Notes:

Seal / Signature

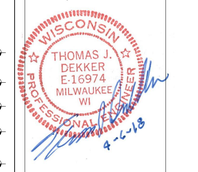

Sheet Title: EXTERIOR ELEVATIONS
Project: AMMONIA CONDENSER ADDITION
Description: AMMONIA CONDENSER ADDITION
Datastream ID:
Datastream Description:

Edit Date: 04/06/18
Edit Time:
Version Author: LI
Version Editor: LI
Drawing No.
S3.1

4/6/2018 9:02:43 AM C:\Revit Local\Revit 2017\018-050 Gehl Foods - Overall_Structural (illocal)_2017.rvt

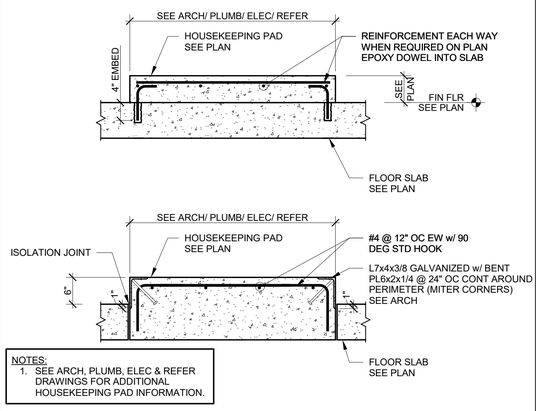

NOTES:
1. SEE ARCH, PLUMB, ELEC & REFER DRAWINGS FOR ADDITIONAL HOUSEKEEPING PAD INFORMATION.

11 HOUSEKEEPING PAD DETAIL

S5.1 SCALE: 3/4" = 1'-0"

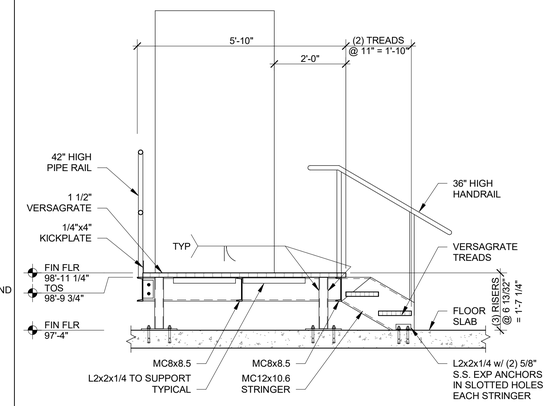

10 STEEL STAIR SECTION

S5.1 SCALE: 1/2" = 1'-0"

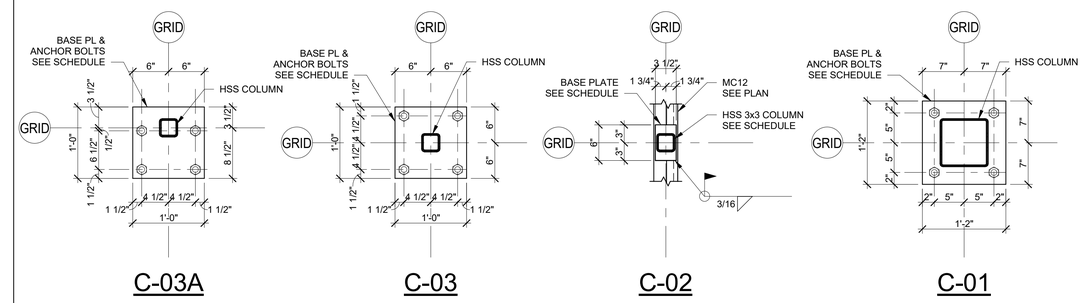

9 BASE PLATE DETAILS

S5.1 SCALE: 1" = 1'-0"

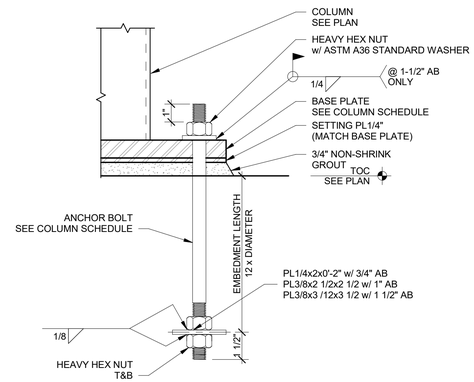

8 TYP ANCHOR BOLT DETAIL

S5.1 SCALE: 3" = 1'-0"

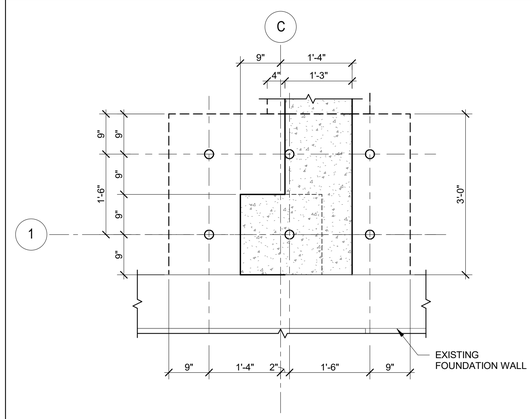

7 ENLARGED PIER CAP DETAIL

S5.1 SCALE: 3/4" = 1'-0"

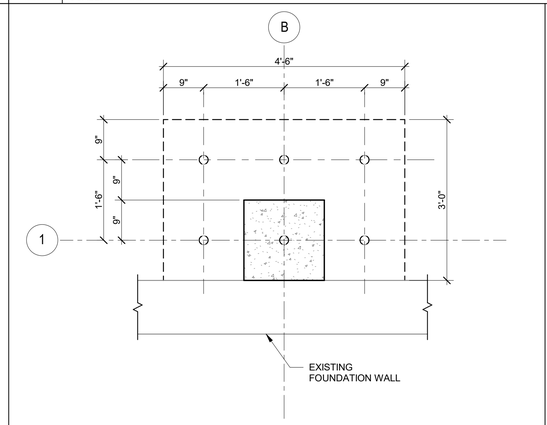

6 ENLARGED PIER CAP DETAIL

S5.1 SCALE: 3/4" = 1'-0"

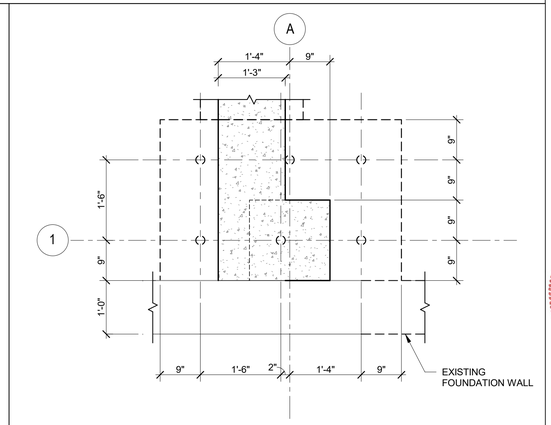

5 ENLARGED PIER CAP DETAIL

S5.1 SCALE: 3/4" = 1'-0"

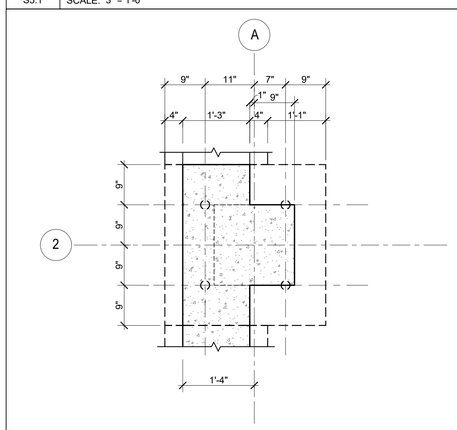

4 ENLARGED PIER CAP DETAIL

S5.1 SCALE: 3/4" = 1'-0"

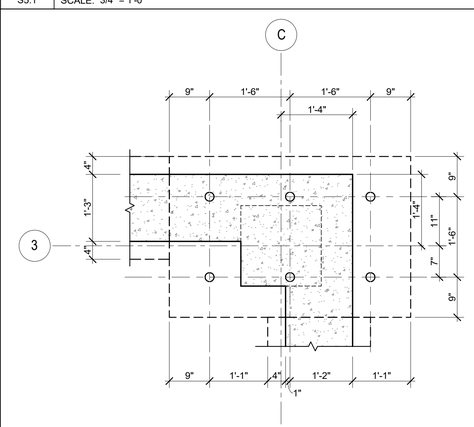

3 ENLARGED PIER CAP DETAIL

S5.1 SCALE: 3/4" = 1'-0"

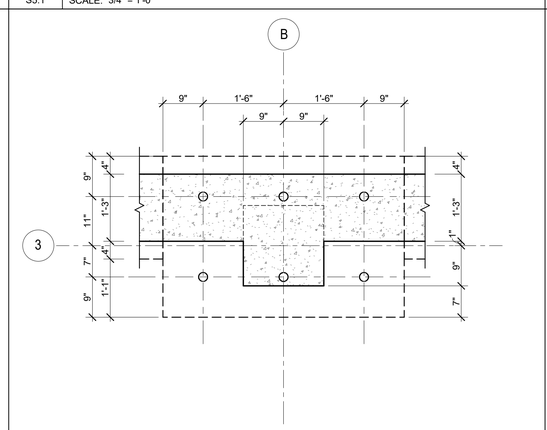

2 ENLARGED PIER CAP DETAIL

S5.1 SCALE: 3/4" = 1'-0"

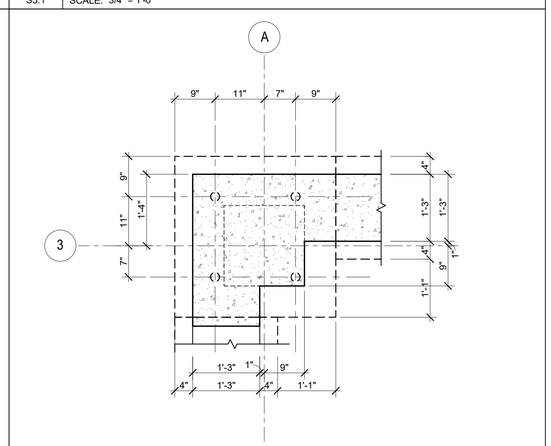

1 ENLARGED PIER CAP DETAIL

S5.1 SCALE: 3/4" = 1'-0"

GehlFoods
N116 W15970 Main Street
Germantown, WI
262.251.8570
IN ASSOCIATION WITH:
AMBROSE ENGINEERING
PHONE: 262-377-7602
AE PROJECT# 018.050.01

Author: LI
Edited By: LI
Date Created:
Type:
Notes:

Seal / Signature

WISCONSIN PROFESSIONAL ENGINEER THOMAS J. DEKKER E-16974 MILWAUKEE WI 4-6-18

Sheet Title: SECTIONS AND DETAILS
Project: AMMONIA CONDENSER ADDITION
Description: AMMONIA CONDENSER ADDITION
Datastream ID:
Datastream Description:

Edit Date: 04/06/18
Edit Time:
Version Author: LI
Version Editor: LI
Drawing No.
S5.1

4/6/2018 9:02:44 AM C:\Revit Local\Revit 2017\018-050 Gehl Foods - Overall_Structural (illocal)_2017.rvt

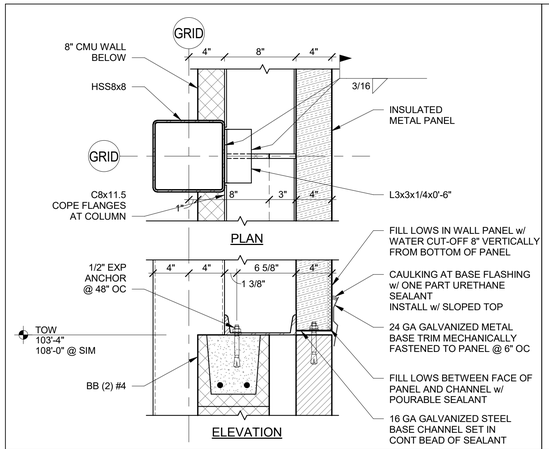

11 TYPICAL ENLARGED PLAN AT COLUMN

S5.2 SCALE: 1 1/2" = 1'-0"

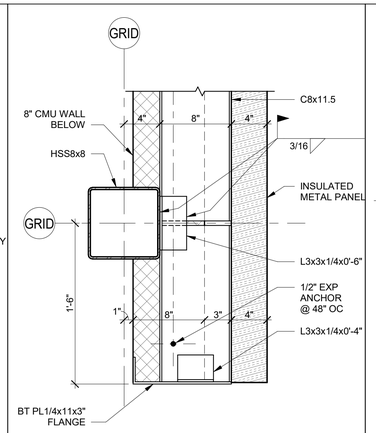

10 ENLARGED PLAN AT OH DOOR

S5.2 SCALE: 1 1/2" = 1'-0"

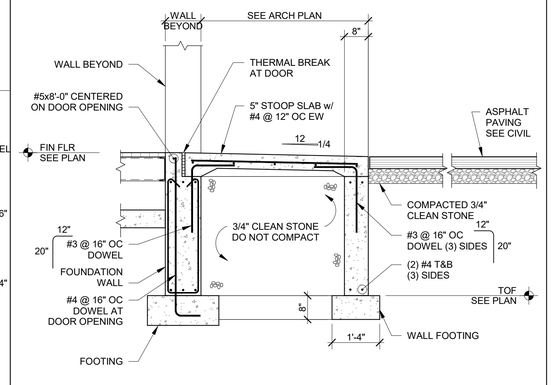

9 TYPICAL STOOP SLAB AT DOOR

S5.2 SCALE: 1/2" = 1'-0"

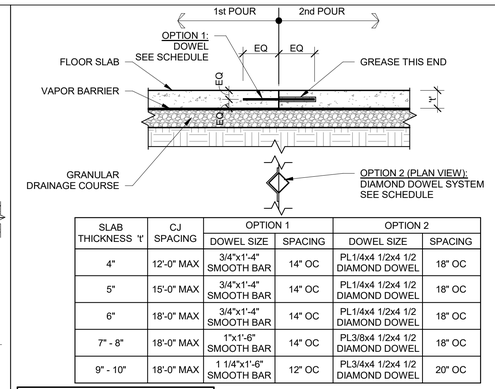

SLAB THICKNESS 't'	CJ SPACING	OPTION 1		OPTION 2	
		DOWEL SIZE	SPACING	DOWEL SIZE	SPACING
4"	12'-0" MAX	3/4"x1'-4" SMOOTH BAR	14" OC	PL1/4x4 1/2x4 1/2 DIAMOND DOWEL	18" OC
5"	15'-0" MAX	3/4"x1'-4" SMOOTH BAR	14" OC	PL1/4x4 1/2x4 1/2 DIAMOND DOWEL	18" OC
6"	18'-0" MAX	3/4"x1'-4" SMOOTH BAR	14" OC	PL1/4x4 1/2x4 1/2 DIAMOND DOWEL	18" OC
7" - 8"	18'-0" MAX	1"x1'-6" SMOOTH BAR	14" OC	PL3/8x4 1/2x4 1/2 DIAMOND DOWEL	18" OC
9" - 10"	18'-0" MAX	1 1/4"x1'-6" SMOOTH BAR	12" OC	PL3/4x4 1/2x4 1/2 DIAMOND DOWEL	20" OC

NOTES:
1. FILL JOINTS WITH SEALANT
2. DIAMOND DOWEL SYSTEM BY PNA CONSTRUCTION TECHNOLOGIES

8 TYPICAL SLAB ON GRADE CONSTRUCTION JOINT

S5.2 SCALE: 3/4" = 1'-0"

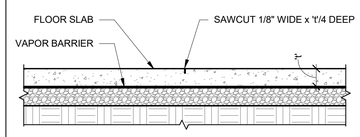

NOTES:
1. 't' = SLAB THICKNESS

7 TYPICAL SLAB ON GRADE CJ

S5.2 SCALE: 3/4" = 1'-0"

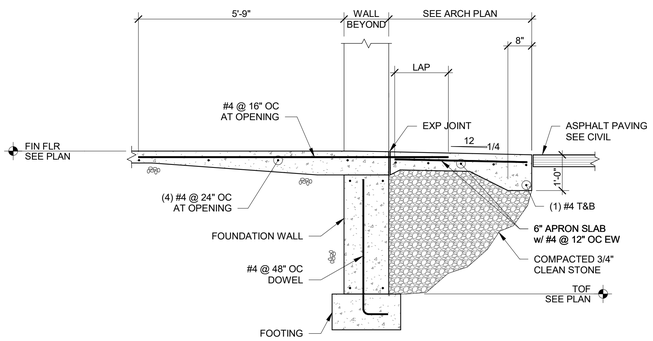

6 TYPICAL APRON SLAB AT OVERHEAD DOOR

S5.2 SCALE: 1/2" = 1'-0"

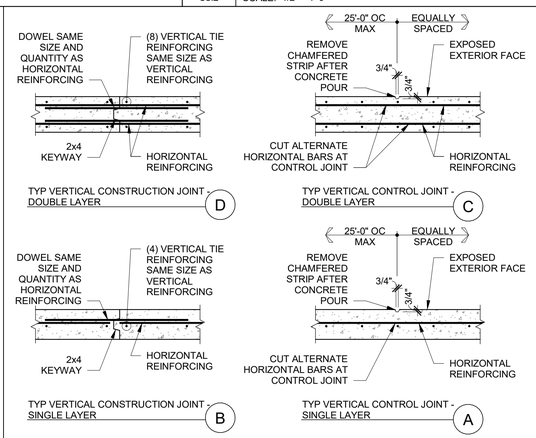

5 TYPICAL CONCRETE WALL JOINTS

S5.2 SCALE: 1/2" = 1'-0"

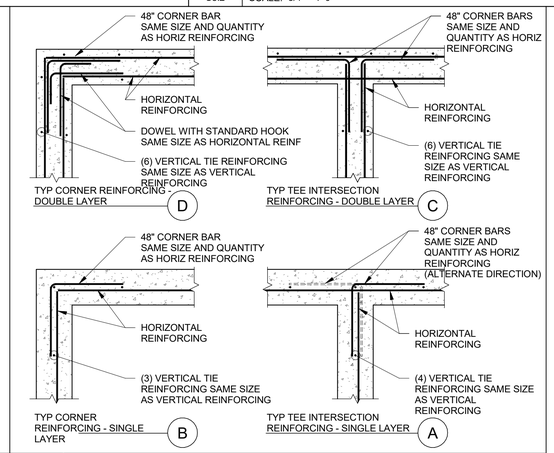

4 TYPICAL CONCRETE FOUNDATION WALL REINFORCING

S5.2 SCALE: 1/2" = 1'-0"

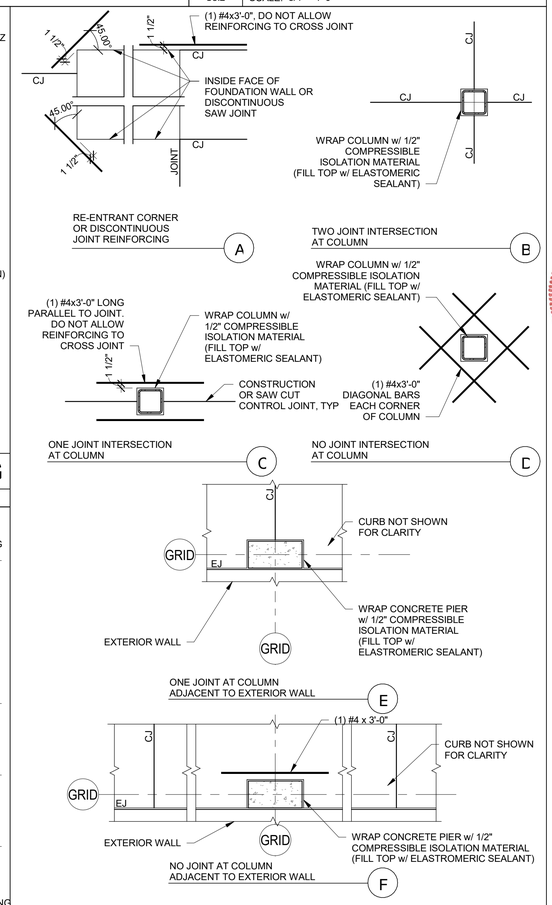

1 TYP SLAB-ON-GRADE REINFORCING DETAILS

S5.2 SCALE: 1/2" = 1'-0"

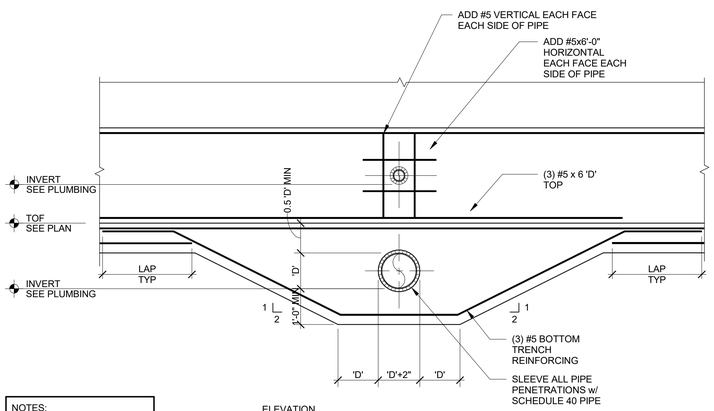

NOTES:
1. 'D' = DIAMETER OF PIPE.

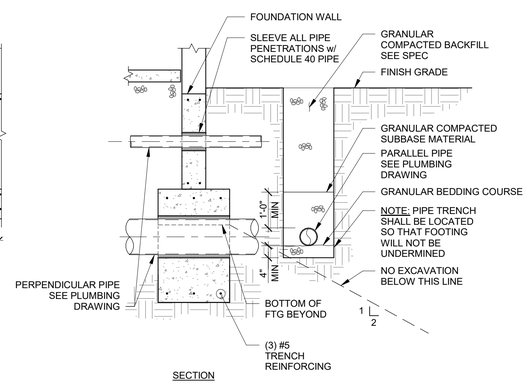

3 TYPICAL PENETRATION THROUGH CONCRETE WALL AND FOOTING

S5.2 SCALE: 1/2" = 1'-0"

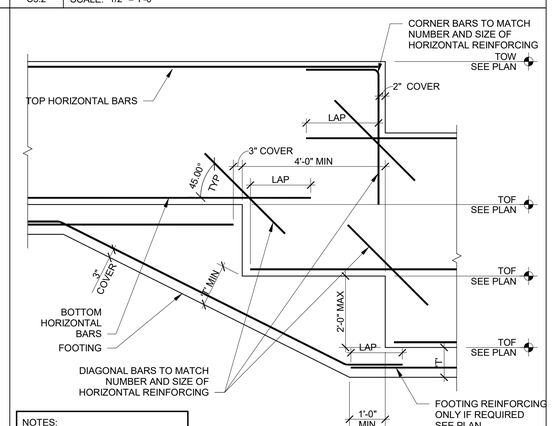

NOTES:
1. 't' = THICKNESS OF FOOTING

2 TYPICAL CONCRETE WALL AND FOOTING STEP

S5.2 SCALE: 1/2" = 1'-0"

GehlFoods
N116 W15970 Main Street
Germantown, WI
262.251.8570

IN ASSOCIATION WITH:
AMBROSE ENGINEERING
PHONE: 262-377-7602
AE PROJECT# 018.050.01

Author: LI
Edited By: LI
Date Created:
Type:
Notes:

Seal / Signature

WISCONSIN THOMAS J. DEKKER E-16974 MILWAUKEE WI PROFESSIONAL ENGINEER
4-6-18

Sheet Title: SECTIONS AND DETAILS
Project: AMMONIA CONDENSER ADDITION
Description: AMMONIA CONDENSER ADDITION
Datastream ID:
Datastream Description:

Edit Date: 04/06/18
Edit Time:
Version Author: LI
Version Editor: LI
Drawing No.
S5.2

4/6/2018 9:02:47 AM C:\Revit Local\Revit 2017\018-050 Gehl Foods - Overall_Structural (ilocal)_2017.rvt

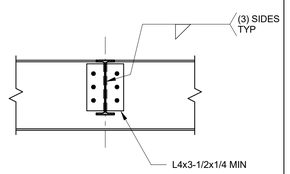

15 BM TO BM DOUBLE ANGLE CONN

S5.3 SCALE: 3/4" = 1'-0"

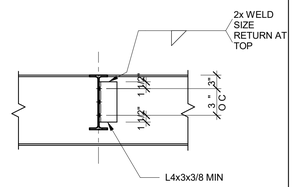

14 BM TO BM SINGLE ANGLE CONN

S5.3 SCALE: 3/4" = 1'-0"

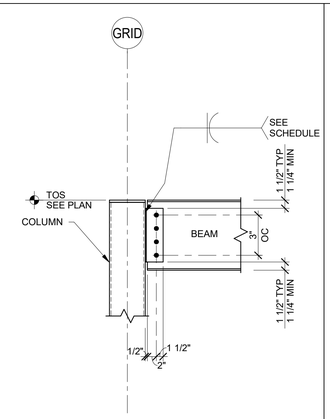

13 TYP BEAM TO COL DOUBLE ANGLE

S5.3 SCALE: 3/4" = 1'-0"

BEAM TO BEAM SHEAR CONNECTION SCHEDULE

	BEAM SIZE	BOLT DIA	NO OF BOLTS	CONN THICKNESS (MIN)	CONN LENGTH (MIN)	CONN WELD (MIN)
SINGLE ANGLE	W8, W10	3/4"	(2)	L4x3-1/2x3/8	6"	1/4
	W12, W14	3/4"	(3)	L4x3-1/2x3/8	9"	1/4
	W16	3/4"	(4)	L4x3-1/2x3/8	12"	1/4
	W18	3/4"	(5)	L4x3-1/2x3/8	15"	1/4
	W21	3/4"	(6)	L4x3-1/2x3/8	18"	1/4
	W24, W27	3/4"	(7)	L4x3-1/2x3/8	21"	1/4
DOUBLE ANGLE	W8, W10	3/4"	(2)	(2) L4x3-1/2x1/4	6"	3/16
	W12, W14	3/4"	(3)	(2) L4x3-1/2x1/4	9"	3/16
	W16	3/4"	(4)	(2) L4x3-1/2x1/4	12"	3/16
	W18, W21	3/4"	(5)	(2) L4x3-1/2x1/4	15"	3/16
	W24, W27	3/4"	(6)	(2) L4x3-1/2x1/4	18"	3/16

12 BEAM TO BEAM SHEAR CONNECTION SCHEDULE

S5.3 SCALE: 1/2" = 1'-0"

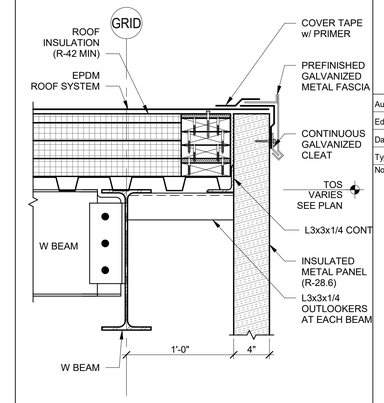

11 ROOF / WALL PANEL EDGE DETAIL

S5.3 SCALE: 1 1/2" = 1'-0"

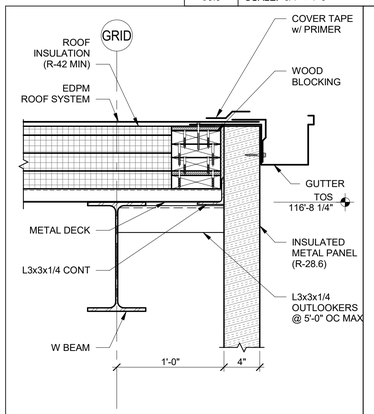

10 ROOF / WALL PANEL EDGE DETAIL

S5.3 SCALE: 1 1/2" = 1'-0"

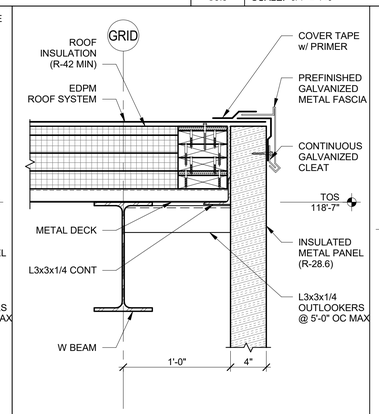

9 ROOF / WALL PANEL EDGE DETAIL

S5.3 SCALE: 1 1/2" = 1'-0"

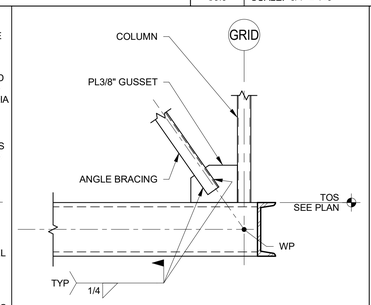

8 ANGLE BRACING AT FLOOR

S5.3 SCALE: 3/4" = 1'-0"

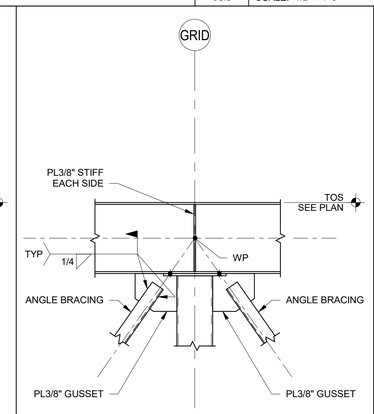

7 ANGLE BRACING AT ROOF

S5.3 SCALE: 3/4" = 1'-0"

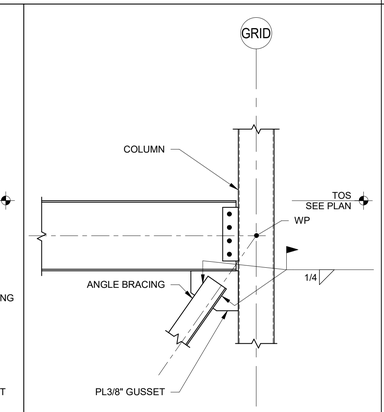

6 ANGLE BRACING AT ROOF

S5.3 SCALE: 3/4" = 1'-0"

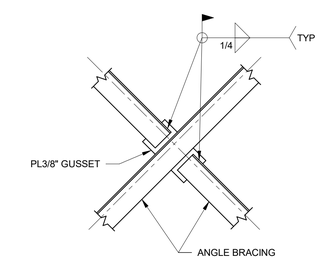

5 ANGLE BRACING CENTER CONN

S5.3 SCALE: 3/4" = 1'-0"

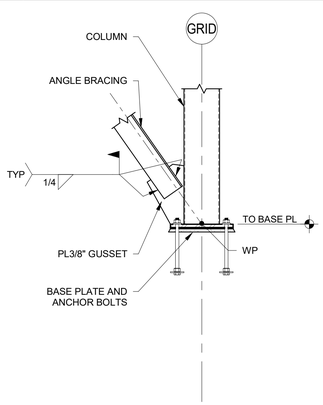

4 ANGLE BRACING BASE

S5.3 SCALE: 3/4" = 1'-0"

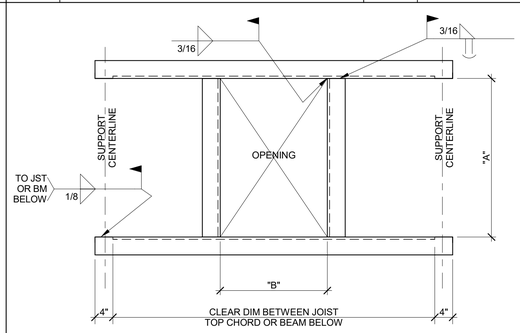

- SEE HVAC FOR LOCATION & SIZE REQUIRED
- DETAIL IS TYPICAL AT OPENINGS GREATER THAN 12", INCLUDING ROOF DRAINS & SUMPS
- DIMENSIONS "A" & "B" BY MECHANICAL CONTRACTOR & ROOF SUMP SUPPLIER
- SEE FRAMING NOTES FOR ANGLE SIZE

3 FRAME AT ROOF OPENING

S5.3 SCALE: 3/4" = 1'-0"

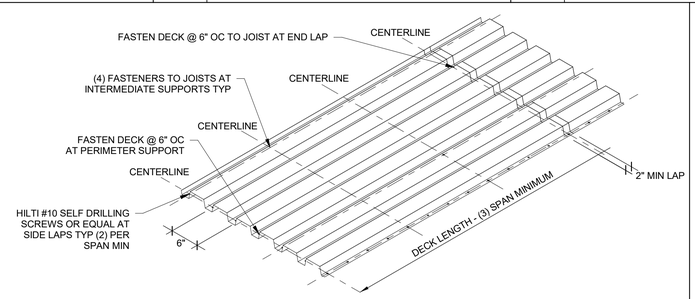

NOTES:

1. MECHANICALLY FASTEN DECK TO SUPPORTS WITH FASTENERS INDICATED BELOW. WELDING WILL NOT BE ALLOWED.

   - JOISTS AND BEAMS: 3/16" <= t <= 3/8" USE HILTI X-HSN24
   - JOISTS: 1/8" <= t <= 3/16" USE HILTI X-HSN24
   - BEAMS & HEAVY JOISTS: t >= 1/4" USE HILTI X-ENP-19

   t = THICKNESS OF BASE MATERIAL

2. MINIMUM 1/8" MATERIAL THICKNESS REQUIRED AT JOIST TOP CHORDS.

2 TYPE 'B' OR 'BA' DECK FASTENER PATTERN

S5.3 SCALE: 1/2" = 1'-0"

BEAM TO HSS COLUMN SHEAR CONNECTION SCHEDULE

	BEAM SIZE	BOLT DIA	QUANTITY OF BOLTS	6" OR 7" COL WIDTH	8" COLUMN WIDTH	FILLET WELD
				MIN CONN THICKNESS	MIN CONN THICKNESS	
DOUBLE ANGLE	W8, W10	3/4"	(2)	(2) L4x3-1/2x1/4	(2) L5x3-1/2x1/4	3/16
	W12, W14	3/4"	(3)	(2) L4x3-1/2x1/4	(2) L5x3-1/2x1/4	3/16
	W16	3/4"	(4)	(2) L4x3-1/2x1/4	(2) L5x3-1/2x1/4	3/16
	W18, W21	3/4"	(5)	(2) L4x3-1/2x1/4	(2) L5x3-1/2x1/4	3/16
	W24, W27	3/4"	(6)	(2) L4x3-1/2x1/4	(2) L5x3-1/2x1/4	3/16

1 BEAM TO HSS COLUMN CONNECTION SCHEDULE

S5.3 SCALE: 1/2" = 1'-0"

GehlFoods
N116 W15970 Main Street
Germantown, WI
262.251.8570

IN ASSOCIATION WITH:

AMBROSE ENGINEERING
PHONE: 262-377-7602
AE PROJECT# 018.050.01

Author: LI
Edited By: LI
Date Created:
Type:
Notes:

Seal / Signature

WISCONSIN THOMAS J. DEKKER E-16974 MILWAUKEE WI PROFESSIONAL ENGINEER
4-6-18

Sheet Title: SECTIONS AND DETAILS
Project: AMMONIA CONDENSER ADDITION
Description: AMMONIA CONDENSER ADDITION
Datastream ID:
Datastream Description:

Edit Date: 04/06/18
Edit Time:
Version Author: LI
Version Editor: LI
Drawing No. S5.3

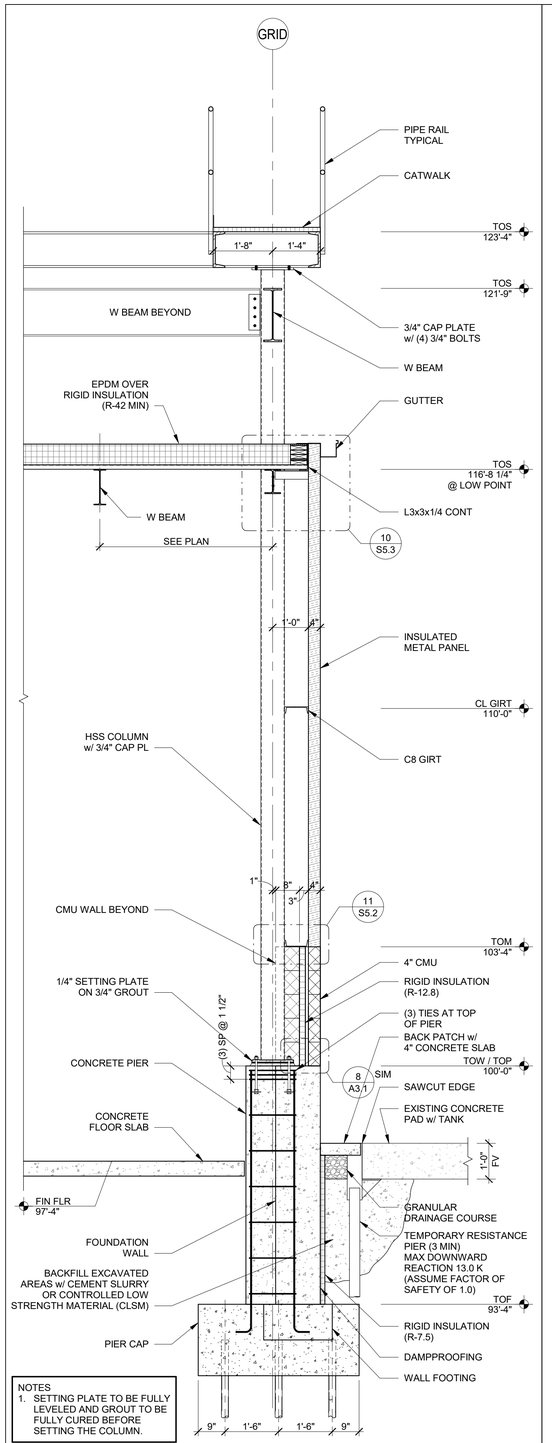

NOTES
1. SETTING PLATE TO BE FULLY LEVELED AND GROUT TO BE FULLY CURED BEFORE SETTING THE COLUMN.

4 WALL SECTION

S5.4 SCALE: 1/2" = 1'-0"

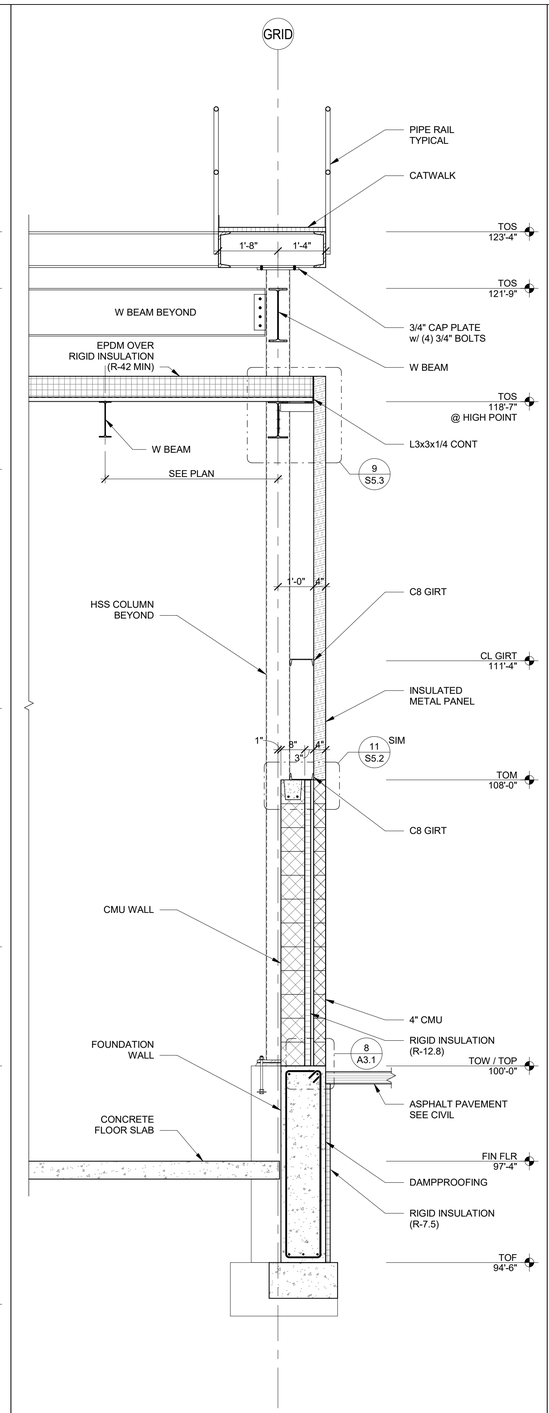

3 WALL SECTION

S5.4 SCALE: 1/2" = 1'-0"

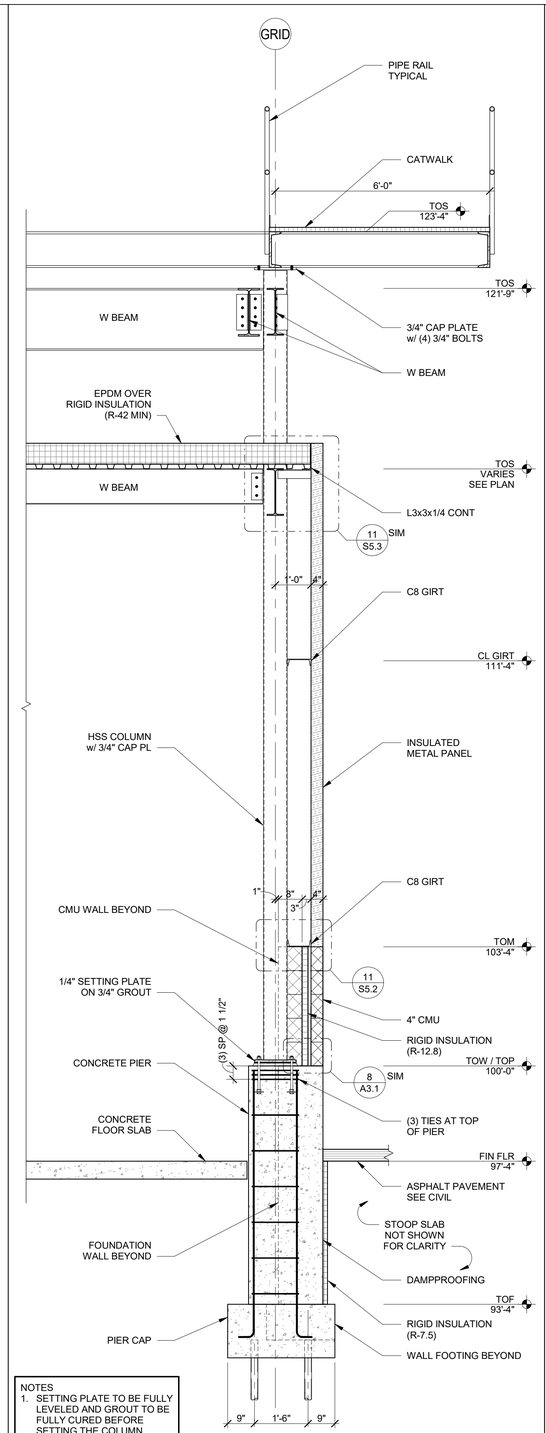

NOTES
1. SETTING PLATE TO BE FULLY LEVELED AND GROUT TO BE FULLY CURED BEFORE SETTING THE COLUMN.

2 WALL SECTION

S5.4 SCALE: 1/2" = 1'-0"

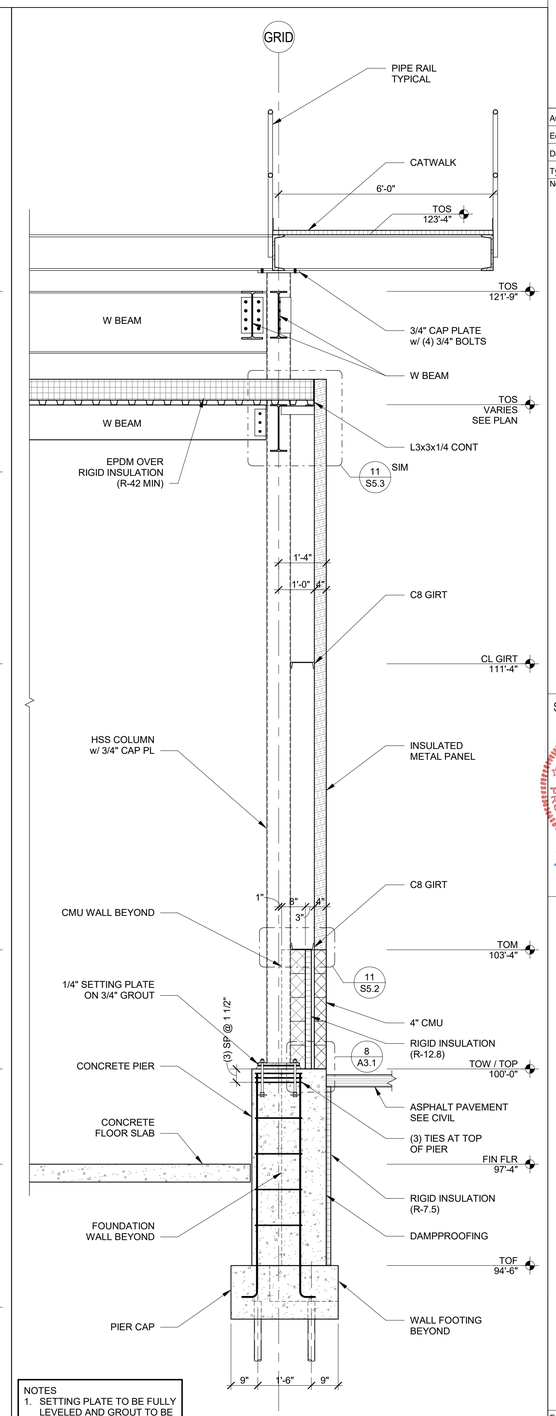

NOTES
1. SETTING PLATE TO BE FULLY LEVELED AND GROUT TO BE FULLY CURED BEFORE SETTING THE COLUMN.

1 WALL SECTION

S5.4 SCALE: 1/2" = 1'-0"

GehlFoods
N116 W15970 Main Street
Germantown, WI
262.251.8570

IN ASSOCIATION WITH:

AMBROSE ENGINEERING
PHONE: 262-377-7602
AE PROJECT# 018.050.01

Author:	LI
Edited By:	LI
Date Created:	
Type:	
Notes:	

Seal / Signature

WISCONSIN PROFESSIONAL ENGINEER THOMAS J. DEKKER E-16974 MILWAUKEE, WI 4-6-18

Sheet Title: SECTIONS AND DETAILS

Project: AMMONIA CONDENSER ADDITION

Description: AMMONIA CONDENSER ADDITION

Datastream ID:

Datastream Description:

Edit Date: 04/06/18
Edit Time:
Version Author: LI
Version Editor: LI

Drawing No.
S5.4

4/6/2018 9:02:50 AM C:\Revit Local\Revit 2017\018-050 Gehl Foods - Overall_Structural (llocal)_2017.rvt

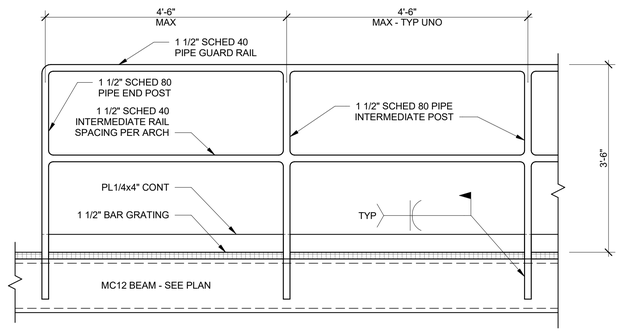

5 TYP GUARDRAIL DETAIL

S5.5 SCALE: 3/4" = 1'-0"

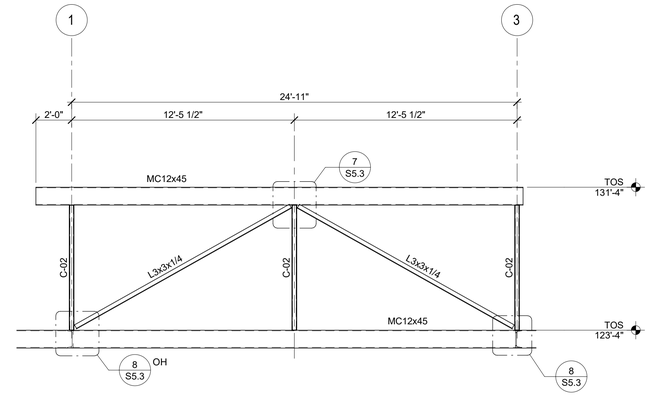

3 SECTION

S5.5 SCALE: 1/4" = 1'-0"

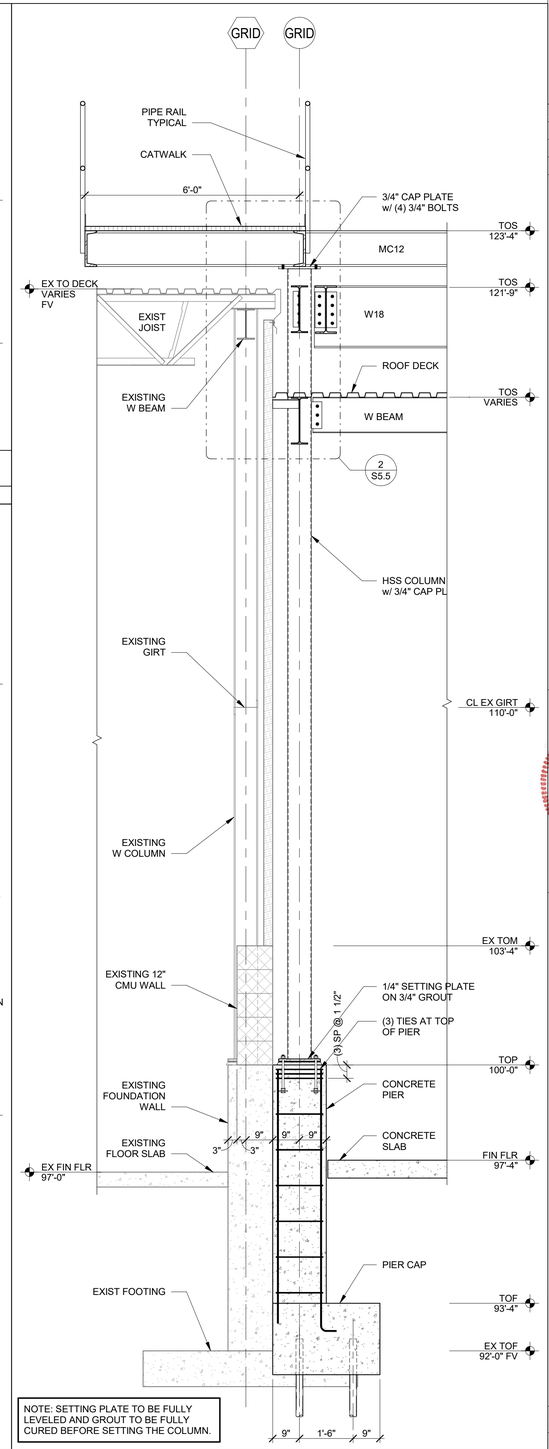

NOTE: SETTING PLATE TO BE FULLY LEVELED AND GROUT TO BE FULLY CURED BEFORE SETTING THE COLUMN.

1 WALL SECTION

S5.5 SCALE: 1/2" = 1'-0"

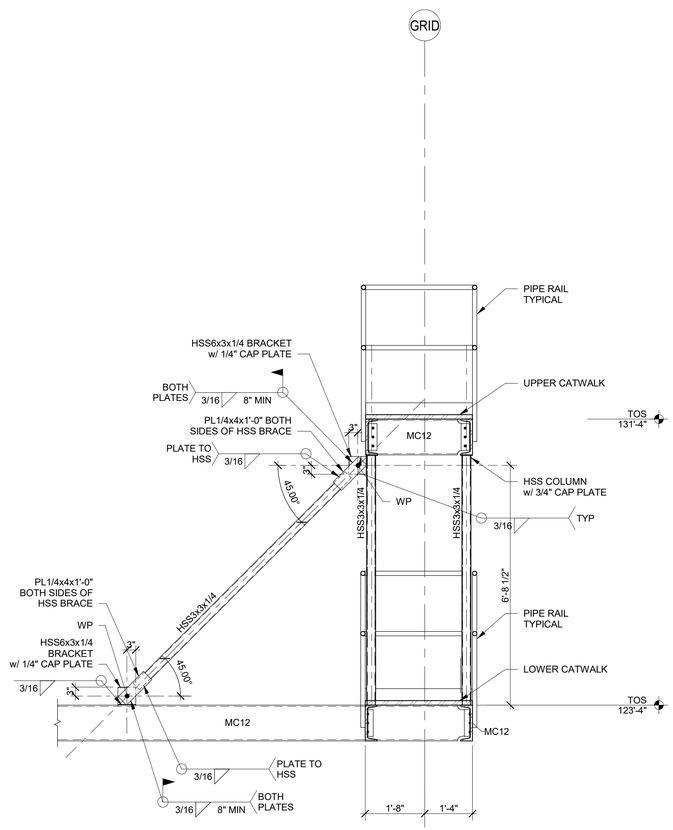

4 BRACE DETAIL

S5.5 SCALE: 1/2" = 1'-0"

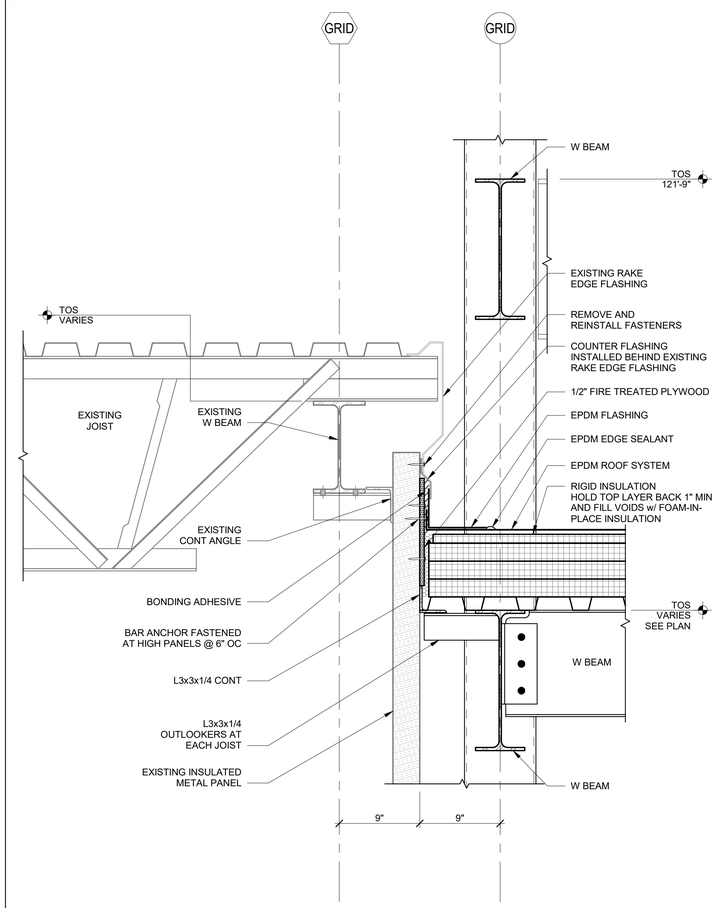

2 ROOF SECTION AT EXIST

S5.5 SCALE: 1 1/2" = 1'-0"

GehlFoods
N116 W15970 Main Street
Germantown, WI
262.251.8570

IN ASSOCIATION WITH:

AMBROSE ENGINEERING
PHONE: 262-377-7602
AE PROJECT# 018.050.01

Author:	LI
Edited By:	LI
Date Created:	
Type:	
Notes:	

Seal / Signature

WISCONSIN PROFESSIONAL ENGINEER
THOMAS J. DEKKER
E-16974
MILWAUKEE
WI
4-6-18

Sheet Title: SECTIONS AND DETAILS

Project: AMMONIA CONDENSER ADDITION

Description: AMMONIA CONDENSER ADDITION

Datastream ID:

Datastream Description:

Edit Date: 04/06/18
Edit Time:
Version Author: LI
Version Editor: LI

Drawing No. S5.5

PLUMBING SPECIFICATIONS

DIVISION 22 PLUMBING

00 72 00 GENERAL CONDITIONS

A. THE AIA GENERAL CONDITIONS A201 LATEST EDITION IS A PART OF THESE DOCUMENTS. COPIES ARE ON FILE AT THE OFFICE OF EXCEL ENGINEERING, INC.

01 11 00 GENERAL REQUIREMENTS

A. THE PLANS AND SPECIFICATIONS ARE INTENDED TO GIVE A DESCRIPTION OF THE WORK. NO DEVIATION FROM THE PLANS AND SPECIFICATIONS SHALL BE MADE WITHOUT THE WRITTEN CONSENT OF EXCEL ENGINEERING, INC. THE CONTRACTOR IS TO CLARIFY ANY DISCREPANCIES WITH EXCEL ENGINEERING, INC. PRIOR TO BEGINNING WORK. THE CONTRACTOR SHALL VISIT THE SITE TO VERIFY EXISTING CONDITIONS AND ACCESS TO THE WORK AREA.

B. SUBSTITUTIONS
1. CONTRACTOR SHALL PROVIDE ALL SUPPORTING DATA AND ASSUME THE BURDEN OF PROOF THAT ANY SUBSTITUTE IS EQUIVALENT AS TO APPEARANCE, CONSTRUCTION, CAPACITY, AND PERFORMANCE. THE JUDGMENT OF EQUIVALENCY SHALL BE MADE BY THE ENGINEER AT THE TIME OF SHOP DRAWING REVIEW, NOT DURING BIDDING.
2. WHERE SUBSTITUTE EQUIPMENT REQUIRES REDESIGN OF ANY PART OF THE PROJECT, THE COST OF REDESIGN AND ADDITIONAL COSTS OF THE WORK SHALL BE PAID BY THE CONTRACTOR. REDESIGN SHALL BE SUBJECT TO THE APPROVAL OF ALL AUTHORITIES HAVING JURISDICTION OVER THE WORK INCLUDING THE ARCHITECT/ ENGINEER.
3. CONTRACTOR SHALL ASSUME ALL COORDINATION RESPONSIBILITIES FOR SUBSTITUTE EQUIPMENT INCLUDING COORDINATION ACROSS TRADES AND COORDINATION OF PREVIOUSLY REVIEWED AND APPROVED SHOP DRAWING SUBMITTALS, SHOULD THESE SHOP DRAWINGS BE AFFECTED BY THE SUBSTITUTED EQUIPMENT.

C. IN AS MUCH AS THE SPECIFICATIONS ARE BRIEF, THE CONTRACTOR SHALL PROVIDE WORKMANSHIP THAT IS OF THE BEST QUALITY WITH THE BEST POSSIBLE APPEARANCE AND UTILITY. FAULTY WORK SHALL BE REPAIRED OR REPLACED AT NO COST TO THE OWNER. INDUSTRY STANDARDS SHALL BE USED AS THE GUIDE FOR QUALITY OF MATERIALS AND WORKMANSHIP.

D. SHOP DRAWINGS, PRODUCT DATA, TEST RESULTS AND SAMPLE SUBMITTALS:
1. SHOP DRAWING SUBMITTALS SHALL BE MADE TO EXCEL ENGINEERING, INC. FOR APPROVAL PRIOR TO FABRICATION AND INSTALLATION.
2. PLUMBING CONSTRUCTION ADMINISTRATION SUBMITTAL LIST:
   a. PIPING
   b. PIPE IDENTIFICATION
   c. FIXTURES
   d. INSULATION
   e. HANGERS
   f. DRAINS AND CLEANOUTS
   g. VALVES
   h. SEWAGE EJECTORS

22 05 00 BASIC PLUMBING REQUIREMENTS

A. DETAILS AND SCHEDULES ARE SHOWN TO AID THE CONTRACTOR AND ARE NOT MEANT TO BE INCLUSIVE OF ALL DEVICES. PROVIDE REQUIRED EQUIPMENT AND ACCESSORIES FOR A COMPLETE INSTALLATION.

B. INSTALL ALL EQUIPMENT PER MANUFACTURER'S INSTALLATION INSTRUCTIONS AND REQUIREMENTS. PROVIDE ADDITIONAL WORK AND MATERIALS AS REQUIRED.

C. REGULATORY REQUIREMENTS
1. PERFORM WORK PER STATE OF WISCONSIN CHAPTER SPS 382, "DESIGN, CONSTRUCTION, INSTALLATION, SUPERVISION, AND INSPECTION OF PLUMBING", AND "STANDARD SPECIFICATION FOR SEWER AND WATER CONSTRUCTION IN WISCONSIN".

D. COORDINATE INSTALLATION OF PLUMBING WORK WITH THE OTHER CONTRACTORS TO AVOID CONFLICTS WITH OTHER WORK.

E. CUTTING AND PATCHING
1. PROVIDE ALL CUTTING AND PATCHING NECESSARY FOR PLUMBING WORK INSTALLATION UNLESS THIS WORK IS IDENTIFIED TO BE THE WORK OF OTHER CONTRACTORS. PATCHING SHALL MATCH ADJACENT SURFACES.

F. SEALANTS
1. PLUMBING CONTRACTOR SHALL PROVIDE ALL SEALANTS WHERE JOINT IS HIDDEN AND WHERE JOINT IS EXPOSED IN MECHANICAL ROOM.
2. SEALANT CONTRACTOR SHALL PROVIDE SEALANTS AT ALL EXPOSED LOCATIONS IN FINISHED ROOMS.

G. ESCUTCHEONS
1. INSTALL ONE-PIECE (TWO PIECE FOR EXISTING PIPING) POLISHED CHROME PLATED STEEL ESCUTCHEONS AT PENETRATIONS EXPOSED IN FINISHED ROOMS (ROOMS WHICH DON'T HAVE UNFINISHED CONCRETE FLOORS).
2. ESCUTCHEONS WITH SPRINGS FOR WALL AND CEILING LOCATIONS.
3. ID TO CLOSELY FIT AROUND PIPE/INSULATION, OD THAT COMPLETELY COVERS THE OPENING.
4. ESCUTCHEONS REQUIRED IN CABINETS AND CASEWORK.

H. PROJECT COMPLETION
1. CLEAN FIXTURES AND EQUIPMENT AND LEAVE IN PROPER WORKING CONDITION AT THE TIME OF FINAL CLEAN-UP.
2. REMOVE, CLEAN AND REPLACE AERATORS AFTER FLUSHING WATER PIPING.
3. PROVIDE OPERATING INSTRUCTIONS FOR A TOTAL OF ONE HALF (0.5) HOURS. MAINTAIN A RECORD OF OPERATING INSTRUCTION PERIODS AND OBTAIN OWNER SIGNOFF THAT INSTRUCTIONS HAVE BEEN COMPLETED.
4. PROVIDE PLUMBING EQUIPMENT OPERATING AND MAINTENANCE MANUALS TO THE OWNER PER IMC 364.0313(3).
5. AS-BUILT DRAWINGS SHALL BE MARKED ON A FINAL SET OF DRAWINGS WHICH INCLUDES ALL REVISIONS.

22 05 29 PIPE AND EQUIPMENT HANGERS AND SUPPORTS

A. MANUFACTURERS: B-LINE, EMPIRE INDUSTRIES, GLOBAL PIPE HANGER PRODUCTS, GRINNEL, NATIONAL PIPE HANGER, UNI STRUT.

B. ANGLES, CHANNELS, AND BEAMS: ASTM A36 AND A572 AS REQUIRED.

C. HANGERS SHALL NOT BE ATTACHED TO JOIST BRIDGING.

D. ATTACHMENT TO METAL DECK: HANGERS MAY BE ANCHORED TO METAL FLOOR/ROOF DECK IF ALL THE FOLLOWING CONDITIONS ARE MET:
1. MAXIMUM HANGER LOAD OF 50 LBS.
2. ANCHORED TO BOTTOM OF DECK FLUTES, NOT UPPER FLUTE.
3. ANCHOR LENGTH SHALL EXCEED DECK DEPTH.

E. PIPE HANGERS/SUPPORTS
1. SEE DETAILS ON PLANS FOR ADDITIONAL PIPE HANGER SPECIFICATIONS.
2. SEE SCHEDULE ON PLANS FOR HANGER SPACING.
3. CONFORM TO ASME B31.9 AND MANUFACTURER'S STANDARDIZATION SOCIETY (MSS) SP-58-2009.
4. INSTALL HANGERS AND SUPPORTS SO PIPING LIVE AND DEAD LOADS AND STRESSES FROM MOVEMENT WILL NOT BE TRANSMITTED TO CONNECTED EQUIPMENT. ADJUST HANGERS TO DISTRIBUTE LOADS EQUALLY ON ATTACHMENTS AND TO PROVIDE INDICATED PIPE SLOPES.

F. STRUT SYSTEM
1. COMPLY WITH THE LATEST REVISION OF MFMA STANDARDS PUBLICATION NUMBER MFMA-3, "METAL FRAMING STANDARDS PUBLICATION".
2. INSTALL STRUT IN ACCORDANCE WITH MFMA-102 "GUIDELINES FOR THE USE OF METAL FRAMING"; IN ACCORDANCE WITH EQUIPMENT MANUFACTURER'S RECOMMENDATONS, AND WITH RECOGNIZED INDUSTRY PRACTICES.
3. COLD FORMED LOW CARBON STEEL METAL FRAMING CHANNEL STRUT: B-LINE TYPE B CHANNEL.
4. MANUFACTURER'S STANDARD FINISH OR PLAIN FINISH.
5. 1-5/8 INCHES WIDE IN VARYING HEIGHTS AND WELDED COMBINATIONS AS REQUIRED TO MEET LOAD CAPACITIES.

22 05 53 MECHANICAL IDENTIFICATION

A. NAMEPLATES
1. MANUFACTURERS: MARKING SERVICES, BRADY B-1, AND SETON SETONFLEX.
2. 3/4" HIGH, 1/16" THICK PLASTIC WITH ENGRAVED WHITE LETTERS ON BLACK BACKGROUND COLOR, SCREW OR ADHESIVE MOUNTING.
3. PROVIDE AT CONTROL PANELS AND STARTERS.

B. VALVE TAGS
1. MANUFACTURERS: MARKING SERVICES, W.H. BRADY, AND SETON NAME PLATE COMPANY.
2. 1-1/2" DIAMETER 20 GAUGE BRASS TAG WITH STAMPED BLACK LETTERS. ATTACH WITH 5765 #6 SOLID BRASS BEAD CHAIN.
3. PROVIDE TYPEWRITTEN LETTER SIZE CHART.
4. COORDINATE VALVE TAG NOMENCLATURE/NUMBERING SEQUENCE/STARTING NUMBER WITH OWNER PRIOR TO ORDERING TAGS.
5. ALL VALVES SHALL BE TAGGED EXCEPT DRAIN VALVES AND FIXTURE STOPS.

C. PIPE IDENTIFICATION
1. INDOOR SELF-ADHESIVE PIPE MARKERS
   a. MANUFACTURERS: MARKING SERVICES MS-900, BRADY B-736, SETON OPTI-CODE.
   b. FLEXIBLE PVC FILM WITH PRESSURE SENSITIVE ACRYLIC ADHESIVE BACKING WITH PRINTED MARKINGS.
   c. SECURE WITH 2" WIDE TAPE WITH ARROWS INDICATING FLOW.
2. COLOR, OVERALL SIZE AND LETTER HEIGHT SHALL CONFORM TO ASME A13.1- 2007 "SCHEME FOR THE IDENTIFICATION OF PIPING SYSTEMS".
3. IDENTIFY PIPE SERVICE, FLOW DIRECTION, AND PRESSURE.
4. IDENTIFICATION SYSTEM SHALL MATCH CURRENT SYSTEM IN THE BUILDING. WHERE NONE EXISTS, PROVIDE PER SPECIFICATIONS.
5. LOCATIONS
   a. LOCATE TO FACE GREATEST POINT OF VISIBILITY. ALL ADJACENT LABELS TO BE INSTALLED NEATLY IN A ROW.
   b. LOCATE IDENTIFICATION NOT-TO-EXCEED 50 FEET FOR EXPOSED PIPING.
   c. LOCATE IDENTIFICATION NOT-TO-EXCEED 25 FEET FOR PIPING ABOVE CEILINGS.
   d. MINIMUM ONE LOCATION PER ROOM.
   e. INSTALL IDENTIFICATION AFTER PIPING AND INSULATION IS COMPLETE TO ENSURE MAXIMUM VISIBILITY OF THE IDENTIFICATION SYSTEM.
   f. BEHIND ACCESS PANELS AND ALL OTHER ACCESSIBLE POINTS OF SERVICE.
   g. NEAR LOCATIONS WHERE PIPES PENETRATE WALLS, FLOORS OR CEILINGS.
   h. NEAR EACH VALVE AND CONTROL DEVICE.
   i. AT EACH MAJOR PIECE OF EQUIPMENT.

22 07 00 INSULATION

A. GENERAL
1. SEE INSULATION SCHEDULES ON PLANS FOR ADDITIONAL INFORMATION.
2. INSTALL MATERIALS IN ACCORDANCE WITH MANUFACTURER'S INSTRUCTIONS AND MICA PUBLICATION "COMMERCIAL AND INDUSTRIAL STANDARDS", 2011 SEVENTH EDITION.
3. CONTINUE INSULATION WITHOUT INTERRUPTIONS THROUGH WALLS AND FLOOR PENETRATIONS AND HANGERS.
4. REPAIR INSULATION ON EXISTING PIPING WHICH IS DAMAGED DUE TO CONNECTING OF NEW PIPING. MAINTAIN EXISTING VAPOR BARRIER INTEGRITY.

B. FIBERGLASS (F.G.) INSULATION
1. RIGID PIPING:
   a. O.C. FIBERGLAS PIPE INSULATION, KNAUF EARTHWOOL PIPE INSULATION.
   b. SINGLE OR DOUBLE ADHESIVE SELF-SEALING LAP SYSTEM FOR LONGITUDINAL JOINT, PRESSURE SENSITIVE BUTT STRIP SEALS, ALL SERVICE JACKET VAPOR BARRIER COVERING.
   c. 3.5-5.5 LB./CU.FT., R=4.3 / NOMINAL INCH AT 75 DEG F.
   d. MAX 850 DEG F, JACKET MAX 150 DEG F, 0.02 PERM.
   e. COMPRESSIVE STRENGTH AT 10% DEFORMATION 125 LB./S.F.
   f. SEMI-RIGID F.G. INSULATION MAY BE USED FOR PIPES 10" AND LARGER.
   g. VALVES, FITTINGS, AND FLANGE COVERS:
      1). ZESTON 2000/300 SERIES, CEELCO 300 SERIES, PROTO LOSMOKE PVC JACKET
      2). HIGH IMPACT 30 MIL WHITE PVC WITH PRECUT FIBERGLASS INSERTS. MAX TEMP 150 DEG

C. ELASTOMERIC FOAM INSULATION
1. SEAL BUTT JOINTS WITH ADHESIVE.
2. PIPE
   a. MANUFACTURERS: AEROFLEX AEROCEL SSPT, K-FLEX INSUL-LOCK DS, ARMACELL AP/ARMAFLEX BLACK LAPSEAL.
   b. EPDM/PVC BASE ELASTOMERIC FOAM MATERIAL
   c. DUAL TAPE CLOSURE
   d. MAX. 'K' VALUE 0.245 AT 75 DEG F
   e. MAX. CONTINUOUS TEMPERATURE 220 DEG F
   f. MAX. 0.05 PERM PER ASTM E96
   g. MAX. FIRE/SMOKE DEVELOPED OF 25/50 PER ASTM E84 FOR UP TO 2" THICK.
   h. PROVIDE MANUFACTURER PREFORMED INSULATION OVER VALVES AND FITTINGS
   i. FIELD CUTTING AND GLUING LONGITUDINAL JOINT NOT PERMITTED.

D. JACKETS
1. PVC:
   a. ZESTON, CEELCO, PROTO LOSMOKE PVC JACKET
   b. 30 MIL WHITE PVC. MAX TEMP 150 DEG F.
   c. FULLY ADHERE JOINT WITH SOLVENT WELDED ADHESIVE. CIRCUMFERENTIAL SEAMS MINIMUM 1" OVERLAP, LONGITUDINAL SEAMS MINIMUM 1.5" OVERLAP. LOCATE JOINT AT LEAST VISIBLE SIDE OF PIPE.
   d. PROVIDE SLIP JOINTS PERIODICALLY ON LONG RUNS OF STRAIGHT PIPE BY INCREASING CIRCUMFERENTIAL OVERLAP TO MINIMUM 8" AND APPLYING A FLEXIBLE WHITE CAULKING IN THE OVERLAP AREA.

E. PIPE INSULATION REQUIREMENTS
1. INSULATE ENTIRE PIPING SYSTEM INCLUDING VALVES AND FITTINGS PER MICA INSULATION STANDARDS PLATES 10 THRU 18.
2. SEAL ALL INSULATION ENDS.

22 10 00 EXCAVATION AND BACKFILL

A. P.C. SHALL EXCAVATE AND BACKFILL TRENCHES FOR PLUMBING WORK.

B. PROTECT BENCHMARKS, EXISTING STRUCTURES, FENCES, SIDEWALKS, PAVING, AND CURBS FROM EXCAVATING EQUIPMENT AND VEHICULAR TRAFFIC.

C. MAINTAIN, PROTECT, AND TEMPORARILY SUPPORT ABOVE AND BELOW GRADE UTILITIES WHICH ARE TO REMAIN.

D. PROVIDE AND MAINTAIN ALL FENCING, BARRICADES, SIGNS, WARNING LIGHTS, AND/OR OTHER EQUIPMENT NECESSARY TO KEEP ALL EXCAVATION PITS AND TRENCHES AND THE ENTIRE SUBGRADE AREA SAFE UNDER ALL CIRCUMSTANCES AND AT ALL TIMES. NO EXCAVATION SHALL BE LEFT UNATTENDED WITHOUT ADEQUATE PROTECTION.

E. ELEVATIONS SHOWN ON THE PLANS ARE SUBJECT TO SUCH REVISIONS AS MAY BE NECESSARY TO FIT FIELD CONDITIONS.

F. EXCAVATING
1. CUT TRENCHES SUFFICIENTLY WIDE TO ENABLE INSTALLATION AND ALLOW INSPECTION. REMOVE WATER OR MATERIALS THAT INTERFERE WITH WORK.
2. DO NOT INTERFERE WITHIN 45 DEGREE BEARING SPLAY OF FOUNDATIONS.
3. EXCAVATE MINIMUM 4" BELOW BOTTOM OF PIPE IF STONE GREATER THAN 1" OR BEDROCK IS ENCOUNTERED.
4. REMOVE UNSTABLE AREAS OF SUBGRADE BELOW PIPE TO MINIMUM 24" BELOW PIPE OR TO STABLE MATERIAL. BACKFILL WITH PEA GRAVEL, LIMESTONE SCREENINGS, OR EQUIVALENT AND COMPACT TO DENSITY EQUAL TO REQUIREMENTS FOR SUBSEQUENT BACKFILL MATERIAL.
5. STOCKPILE EXCAVATED MATERIAL IN AREA DESIGNATED ON SITE AND REMOVE EXCESS MATERIAL NOT BEING USED FROM SITE.

G. BEDDING AND BACKFILL:
1. LINES PASSING UNDER FOUNDATIONS:
   a. INSTALL WITH MINIMUM OF 1-1/2 INCH CLEARANCE TO CONCRETE AND ENSURE THERE IS NO DISTURBANCE OF BEARING SOIL.
   b. BACKFILL WITH COMPACTED ENGINEER FILL PER GEOTECH REPORT.
2. MECHANICALLY COMPACT BEDDING AND BACKFILL TO PREVENT SETTLEMENT. THE INITIAL COMPACTED LIFT TO NOT EXCEED 24" COMPACTED TO 95% DENSITY PER MODIFIED PROCTOR TEST (ASTM D-1557). SUBSEQUENT LIFTS UNDER PAVEMENTS, CURBS, WALKS AND STRUCTURES ARE NOT TO EXCEED 12" AND BE COMPACTED TO 95% DENSITY PER MODIFIED PROCTOR TEST. IN ALL OTHER AREAS WHERE CONSTRUCTION ABOVE THE EXCAVATION IS NOT ANTICIPATED WITHIN 2 YEARS, MECHANICALLY COMPACT BACKFILL IN LIFTS NOT EXCEEDING 24" TO 90% DENSITY PER MODIFIED PROCTOR TEST.
3. MAINTAIN OPTIMUM MOISTURE CONTENT OF FILL MATERIALS TO ATTAIN REQUIRED COMPACTION DENSITY.
4. BEDDING: WHERE OVEREXCAVATED, BRING BACK TO BOTTOM OF PIPE ELEVATION WITH DRY SAND, GRAVEL OR CRUSHED STONE PASSING A 3/4" SIEVE.
5. BACKFILL TO A DEPTH OF 12" OVER THE PIPE WITH SAND, CRUSHED STONE THAT PASSES A 1" SIEVE. PLACE IN WELL TAMPED MAXIMUM 6" LAYERS FOR LENGTH OF SEWER AND WIDTH OF TRENCH.
6. BACKFILL ABOVE 12" ABOVE THE PIPE:
   a. UNDER EXISTING AND FUTURE UTILITIES, AND BUILDINGS: GRANULAR MATERIALS, PIT RUN SAND, GRAVEL, OR CRUSHED STONE, FREE FROM LARGE STONES, ORGANIC, AND FROZEN MATERIALS.
7. DIRECT SURFACE WATER AWAY FROM STOCKPILE SITE TO PREVENT EROSION OR DETERIORATION OF MATERIALS. REMOVE STOCKPILE, LEAVE AREA IN A CLEAN AND NEAT CONDITION. GRADE SITE SURFACE TO PREVENT FREESTANDING SURFACE WATER.

22 11 00 WATER PIPING AND VALVES

A. PIPING
1. SEE PIPE SCHEDULE ON PLANS FOR ADDITIONAL INFORMATION.

B. PIPING INSTALLATION
1. DRAWINGS AND DIAGRAMS SHOW SIZE AND APPROXIMATE LOCATION OF PIPING. THE DRAWINGS SHALL NOT BE SCALED TO DETERMINE EXACT LOCATION. PROVIDE ADDITIONAL OFFSETS TO COORDINATE WITH INSTALLATION REQUIREMENTS OF OTHER SYSTEMS.
2. ROUTE ABOVE GROUND PIPING IN ORDERLY MANNER, PARALLEL TO BUILDING STRUCTURE. OFFSET PIPE CONNECTIONS AT EQUIPMENT TO ALLOW FOR SERVICE, SUCH AS REMOVAL OF THE EQUIPMENT.
3. INSTALL IN ACCORDANCE WITH MANUFACTURER'S INSTRUCTIONS.
4. INSTALL PIPING TO CONSERVE BUILDING SPACE AND NOT INTERFERE WITH USE OF SPACE AND OTHER WORK. GROUP PIPING WHENEVER PRACTICAL AT COMMON ELEVATIONS.
5. INSTALL PIPING TO ALLOW FOR EXPANSION AND CONTRACTION WITHOUT STRESSING PIPE, JOINTS, OR CONNECTED EQUIPMENT.
6. PROVIDE CLEARANCE FOR INSTALLATION OF INSULATION AND ACCESS TO VALVES.
7. DO NOT ROUTE PIPING ABOVE TRANSFORMERS, PANELBOARDS, MOTOR CONTROL CENTERS, SWITCHBOARDS OR OTHER ELECTRICAL DISTRIBUTION EQUIPMENT.
8. PROVIDE NON-CONDUCTING DIELECTRIC CONNECTIONS WHEREVER JOINTING DISSIMILAR METALS.
9. USE ONLY NEW MATERIAL, FREE OF DEFECTS, RUST AND SCALE, AND MEETING THE LATEST REVISION OF THE ASTM SPECIFICATIONS.
10. PREPARE EXPOSED UNFINISHED PIPE, FITTINGS, SUPPORTS, AND ACCESSORIES, READY FOR FINISH PAINTING.
11. SLOPE PIPING AND ARRANGE SYSTEMS TO DRAIN AT LOW POINTS. USE TOP CONNECTIONS FOR TAKEOFFS TO EQUIPMENT ABOVE THE MAINS AND BOTTOM CONNECTIONS FOR TAKEOFFS TO EQUIPMENT BELOW THE MAINS.
12. USE LONG RADIUS ELBOWS FOR ALL 90 DEGREE ELBOWS.
13. INSTALL VALVE STEM BETWEEN THE VERTICAL (UPRIGHT) OR HORIZONTAL POSITION.
14. DO NOT SUPPORT WEIGHT OF PIPING ON VALVE.

C. PIPING TESTING
1. EACH TEST MUST BE WITNESSED BY THE OWNER'S REPRESENTATIVE. IF LEAKS ARE FOUND, REPAIR THE AREA WITH NEW MATERIALS AND REPEAT THE TEST. DO NOT INSULATE PIPE UNTIL IT HAS BEEN SUCCESSFULLY TESTED.
2. MEASURE AND RECORD TEST PRESSURE AT THE HIGH POINT IN THE SYSTEM.
3. TEST WATER DISTRIBUTION SYSTEM WITH POTABLE WATER UNDER A WATER PRESSURE OF 100 PSIG OR THE WORKING PRESSURE OF THE SYSTEM (WHICHEVER IS GREATER) FOR A PERIOD OF (4) HOURS. IF LOCAL AUTHORITIES REQUIRE MORE STRINGENT TESTING, CONTRACTOR SHALL COMPLY WITH THOSE REQUIREMENTS.
4. WHERE NEW PIPING IS AN EXTENSION OF THE EXISTING SYSTEM, TEST THE NEW PIPING PRIOR TO CONNECTION TO THE EXISTING SYSTEM.

D. WATER PIPING BALANCING
1. VERIFY THAT SUFFICIENT WATER FLOW, PRESSURE AND TEMPERATURE ARE AVAILABLE AT EACH OUTLET AND EQUIPMENT CONNECTION.

E. FLUSH AND DISINFECT DOMESTIC WATER SUPPLY SYSTEM AS FOLLOWS:
1. FILL PIPING WITH POTABLE WATER AND ALLOW TO STAND FOR 24 HOURS.
2. FLUSH EACH OUTLET BEGINNING WITH OUTLET CLOSEST TO BUILDING CONTROL VALVE AND THEN EACH SUCCESSIVE OUTLET IN THE SYSTEM.
3. FLUSH EACH OUTLET MINIMUM 1 MINUTE AND UNTIL WATER APPEARS CLEAR AT THE OUTLET.
4. FILL SYSTEM WITH WATER/CHLORINE SOLUTION OF 50 PPM OF CHLORINE AND LET STAND FOR 24 HOURS, OR 200 PPM FOR 3 HOURS.
5. FLUSH WITH POTABLE WATER.
6. REPEAT DISINFECTION IF BACTERIOLOGICAL CONTAMINATION EXISTS.
7. PERFORM WATER QUALITY TEST IF REQUIRED BY LOCAL AUTHORITIES.
8. IF LOCAL AUTHORITIES REQUIRE MORE STRINGENT FLUSHING AND DISINFECTION, CONTRACTOR SHALL COMPLY WITH THOSE REQUIREMENTS.

F. VALVES
1. MANUFACTURERS: NIBCO, APOLLO, KEYSTONE, CENTERLINE, DEZURIK, CRANE, MUELLER, POWELL, VIEGA, GRINNELL, SIOUX CHIEF. LISTING OF MODEL NUMBER DOES NOT PRECLUDE OTHER ACCEPTABLE MANUFACTURERS FROM PROVIDING EQUIVALENT VALVES.
2. SHUTOFF VALVES 2" AND SMALLER
   a. BRONZE BALL VALVE:
      1). SOLDERED: NIBCO S-685-66-LF.
      2). TWO PIECE, CHROME PLATED BRASS OR STAINLESS STEEL BALL, FULL PORT, REINFORCED PTFE SEATS AND STUFFING BOX RING, LEVER HANDLE WITH LOCKABLE HANDLE AND VALVE STEM EXTENSIONS FOR INSULATED PIPING, 250 PSI, NSF 61 ANNEX G LISTED.
3. SHUTOFF VALVES 2 1/2" AND LARGER
   a. BUTTERFLY VALVES:
      1). WATTS BF-03-NSF
      2). LUG ENDS, CAST OR DUCTILE IRON BODY, MOLDED IN EPDM LINER.
      3). BUBBLETIGHT TO 175 PSIG WITH NO DOWNSTREAM FLANGE/PIPE ATTACHED
      4). STAINLESS STEEL SHAFT WITH TEFLON, NYLATRON OR ACETAL BEARINGS, EXTENDED NECK..
      5). ALUMINUM BRONZE OR STAINLESS STEEL DISC.
      6). OPERATOR
         a). 6" AND UNDER: INFINITE POSITION LEVER HANDLE OPERATOR
         b). 8" AND LARGER: HANDWHEEL AND GEAR DRIVE WITH MEMORY STOP.
      7). NSF 61 LISTED.
   b. GLOBE VALVES
      1). 3" AND SMALLER (APOLLO 120S-LF OR EQUIVALENT): LEAD FREE BRONZE BODY, SOLDERED ENDS, THREADED BONNET, PTFE DISC, 200 CWP, NSF 61 ANNEX G LISTED.
4. DRAIN VALVES: SHUTOFF VALVE WITH THREADED CAP. PROVIDE FOR COMPLETE SYSTEM DRAINAGE, NSF 61 LISTED.

22 13 00 DRAIN PIPING AND VALVES

A. PIPING INSTALLATION
1. INSTALL IN ACCORDANCE WITH MANUFACTURER'S INSTRUCTIONS.
2. FIELD VERIFY EXISTING AND PROPOSED SEWER ELEVATIONS AND SIZES AND NOTIFY THE OWNER'S REPRESENTATIVE IN WRITING OF ANY VARIATION OF THE ELEVATIONS BEFORE BEGINNING ANY SEWER AND BUILDING DRAIN WORK.
3. DRAWINGS AND DIAGRAMS SHOW SIZE AND APPROXIMATE LOCATION OF PIPING. THE DRAWINGS SHALL NOT BE SCALED TO DETERMINE EXACT LOCATION. PROVIDE ADDITIONAL OFFSETS TO COORDINATE WITH INSTALLATION REQUIREMENTS OF OTHER SYSTEMS.
4. ROUTE ABOVE GROUND PIPING IN ORDERLY MANNER, PARALLEL TO BUILDING STRUCTURE. OFFSET PIPE CONNECTIONS AT EQUIPMENT TO ALLOW FOR SERVICE, SUCH AS REMOVAL OF THE EQUIPMENT.
5. INSTALL PIPING TO CONSERVE BUILDING SPACE AND NOT INTERFERE WITH USE OF SPACE AND OTHER WORK. GROUP PIPING WHENEVER PRACTICAL AT COMMON ELEVATIONS.
6. INSTALL PIPING TO ALLOW FOR EXPANSION AND CONTRACTION WITHOUT STRESSING PIPE, JOINTS, OR CONNECTED EQUIPMENT.
7. PROVIDE CLEARANCE FOR INSTALLATION OF INSULATION AND ACCESS TO VALVES.
8. DO NOT ROUTE PIPING ABOVE TRANSFORMERS, PANELBOARDS, MOTOR CONTROL CENTERS, SWITCHBOARDS OR OTHER ELECTRICAL DISTRIBUTION EQUIPMENT.
9. PROVIDE NON-CONDUCTING DIELECTRIC CONNECTIONS WHEREVER JOINTING DISSIMILAR METALS.
10. PROVIDE NO-HUB ADAPTER ON PVC PIPE WHERE USING NO-HUB COUPLINGS.
11. SLOPE SANITARY PIPE 2" AND SMALLER 1/4" PER FOOT; 3" AND LARGER PIPING 1/8" PER FOOT.

B. SANITARY DRAIN PIPING TESTING: TEST DRAIN AND VENT PIPING PER CODE REQUIREMENTS.

22 40 00 PLUMBING FIXTURES

A. FIXTURES
1. SEE SCHEDULES FOR ADDITIONAL INFORMATION.
2. LIKE FIXTURE TYPE SHALL BE THE PRODUCT OF THE SAME MANUFACTURER.

B. INSTALLATION
1. INSTALL IN ACCORDANCE WITH MANUFACTURER'S INSTRUCTIONS.
2. PROVIDE CHROME PLATED RIGID SUPPLIES TO FIXTURES WITH STOPS, REDUCERS, AND ESCUTCHEONS UNLESS OTHERWISE NOTED IN SCHEDULES AND DETAILS.
3. SEAL FIXTURES TO WALL AND FLOOR SURFACES WITH MILDEW-RESISTANT SILICONE SEALANT, COLOR TO MATCH FIXTURE.
4. EXPOSED TRAPS, PIPING, AND ESCUTCHEONS SHALL BE CHROME PLATED BRASS UNLESS OTHERWISE NOTED IN SCHEDULES AND DETAILS.

LEGEND

NOTE: ALL SYMBOLS SHOWN MAY NOT APPEAR ON DRAWINGS.

SYM.	ABBR.	IDENTIFICATION	SYM.	ABBR.	IDENTIFICATION
PIPING ACCESSORIES					
	CO	CLEAN OUT			UNION
	WCO	WALL CLEAN OUT			THERMOMETER
	FCO	FLOOR CLEAN OUT (FLUSH)			PRESSURE GAUGE
	BFP	BACKFLOW PREVENTER		HB	HOSE BIBB
	PRV	PRESSURE REDUCING VALVE		RD	ROOF DRAIN
		SHUTOFF VALVE		OF	OVERFLOW DRAIN
		BALANCE VALVE		FD	FLOOR DRAIN
		CHECK VALVE		HD	HUB DRAIN
	WHA	WATER HAMMER ARRESTOR		HD-R	HUB DRAIN WITH REDUCER
		TEST CONNECTION		X	FIXTURE UNIT (WATER SUPPLY OR WASTE)
		PIPING CAP			
PIPING					
	CW	COLD HARD WATER PIPING		P	PROCESS SEWER PIPING
	HW	HOT WATER PIPING		LS	LOW STRENGTH PROCESS SEWER PIPING
	HWR	HOT WATER RETURN PIPING		HS	HIGH STRENGTH PROCESS SEWER PIPING
	SOFT	COLD SOFT WATER PIPING		ST	STORM PIPING
	140 HWS	140° HOT WATER PIPING		OF	OVERFLOW CONDUCTOR PIPING
	140 HWR	140° HOT WATER RETURN PIPING		V	VENT PIPING
	HP CW	HIGH PRESSURE COLD WATER SUPPLY		AW	ACID WASTE PIPING
	HP HW	HIGH PRESSURE HOT WATER SUPPLY		AV	ACID VENT PIPING
	HP HWR	HIGH PRESSURE HOT WATER RETURN		CLW	CLEARWATER DRAIN PIPING
	NP	NON-POTABLE WATER PIPING		CLV	CLEARWATER VENT PIPING
	NP HW	NON-POTABLE HOT WATER		G	GAS PIPING
	NP HWR	NON-POTABLE HOT WATER RETURN		A	AIR PIPING
	TW	TEMPERED WATER PIPING		HS	HYDRAULIC SUPPLY PIPING
	SA	SANITARY SEWER PIPING		HR	HYDRAULIC RETURN PIPING
	GW	GREASE WASTE PIPING		NIT	NITROGEN PIPING
	F	FILTERED WATER PIPING		CO2	CARBON DIOXIDE PIPING
MISCELLANEOUS					
	EL	ELEVATION			CONNECT TO EXISTING
		EQUIPMENT BY OTHERS. CONNECTION BY PC			DETAIL OR SECTION NUMBER / SHEET NUMBER
ABBREVIATIONS					
	AFF	ABOVE FINISHED FLOOR		NTS	NOT TO SCALE
	AFG	ABOVE FINISHED GRADE		OC	ON CENTER
	BJ	BETWEEN JOISTS		PC	PLUMBING CONTRACTOR
	EC	ELECTRICAL CONTRACTOR		RI	ROUGH IN
	FPC	FIRE PROTECTION CONTRACTOR		TJ	THRU JOISTS
	GC	GENERAL CONTRACTOR / CONSTRUCTION MANAGER		TTS	TIGHT TO STRUCTURE
				TYP	TYPICAL
	HC	HVAC CONTRACTOR		VTR	VENT THRU ROOF
	IE	INVERT ELEVATION		WP	WEATHER PROOF
	NIC	NOT IN CONTRACT			
FIRE RATED WALLS					
		FIRE - 1 HOUR			FIRE - 3 HOUR
		FIRE - 2 HOUR			FIRE - 4 HOUR

SHEET INDEX

NUMBER	SHEET NAME
PLUMBING	
P0.1	LEGEND AND SPECIFICATIONS
P1.1	UNDERGROUND AND FIRST FLOOR PLANS
P2.0	ISOMETRICS
P3.0	DETAILS
P4.0	SCHEDULES

GehlFoods
N116 W15970 Main Street
Germantown, WI
262.251.8570
IN ASSOCIATION WITH:
EXCEL
ARCHITECTS ■ ENGINEERS ■ CONSULTING
100 CAMELOT DRIVE
FOND DU LAC, WI 54935
PHONE: (920) 926-9800
WWW.EXCELENGINEER.COM

Author: M. OLK
Edited By:
Date Created:
Type:

Sheet Title: LEGEND AND SPECIFICATIONS
Project: 1805360
Description: AMMONIA REGRIGERATION EXPANSION
Datastream ID:
Datastream Description:

Edit Date: APR. 4, 2018
Edit Time:
Version Author: M. OLK
Version Editor: M. OLK
Drawing No.
P0.1

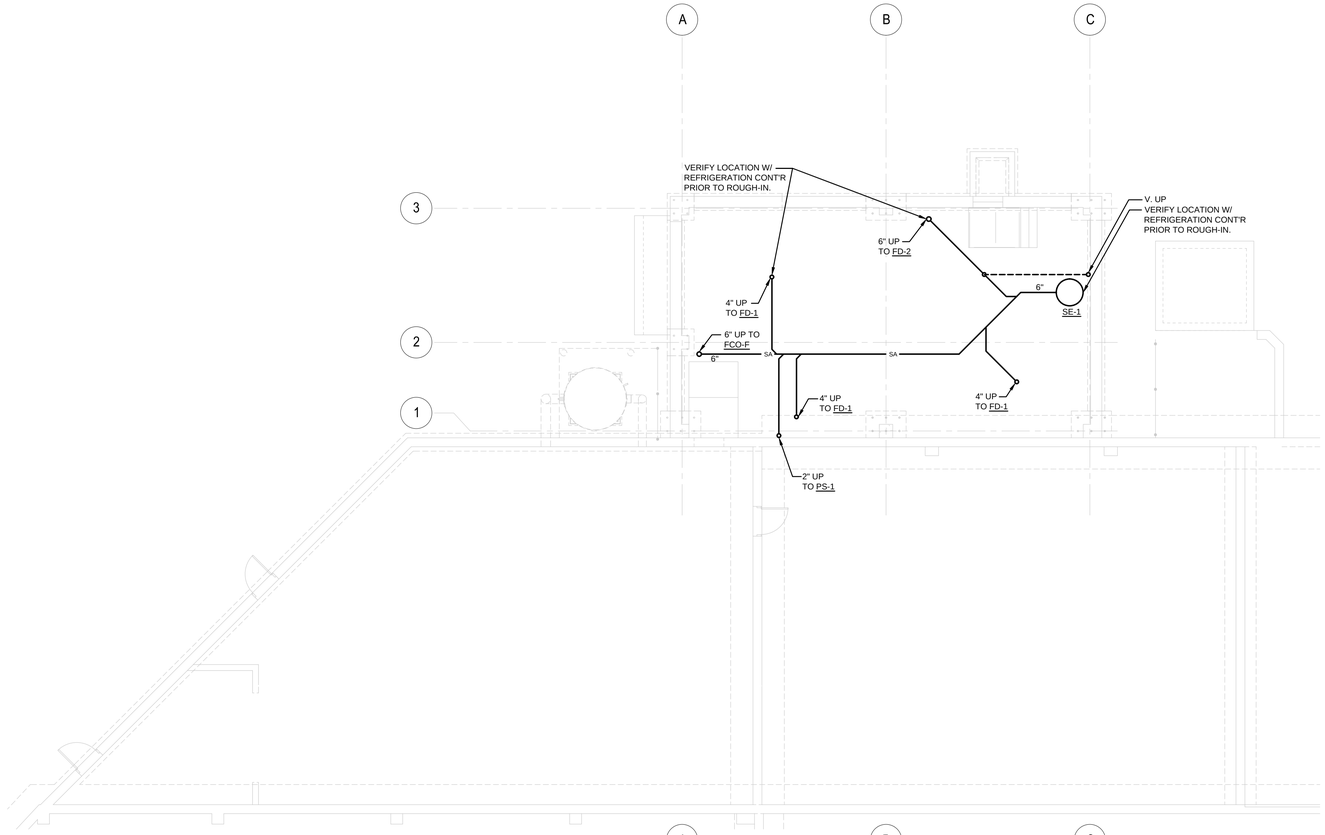

GENERAL NOTES:

- FLOOR AND WALL CLEANOUT LOCATIONS NOT PERMITTED TO BE MOVED WITHOUT APPROVAL OF ARCHITECT/ENGINEER.
- INSTALL HOSE BIBBS AT 18" A.F.F..

KEYNOTES:

NOT ALL KEYED NOTES MAY APPEAR ON PLANS.

1. CONNECT TO EX. 3" SE DISCHARGE. WELD IN PLACE.
2. CONNECT TO EX. FLANGE AT END OF EX. 6" HARD WATER HEADER. PROVIDE 6"x6"x4" TEE W/ FLANGE FOR FUTURE EXTENSION.
3. DISCHARGE TO REFRIGERATION SUMP VIA AIR GAP. PROVIDE GLOBE VALVE BALANCED TO 120 GPM. FIELD VERIFY LOCATION W/ REFRIGERATION CONTR.

NORTH

UNDERGROUND PLAN

SCALE: 1/8" = 1'-0"

8' 0 8' 16'

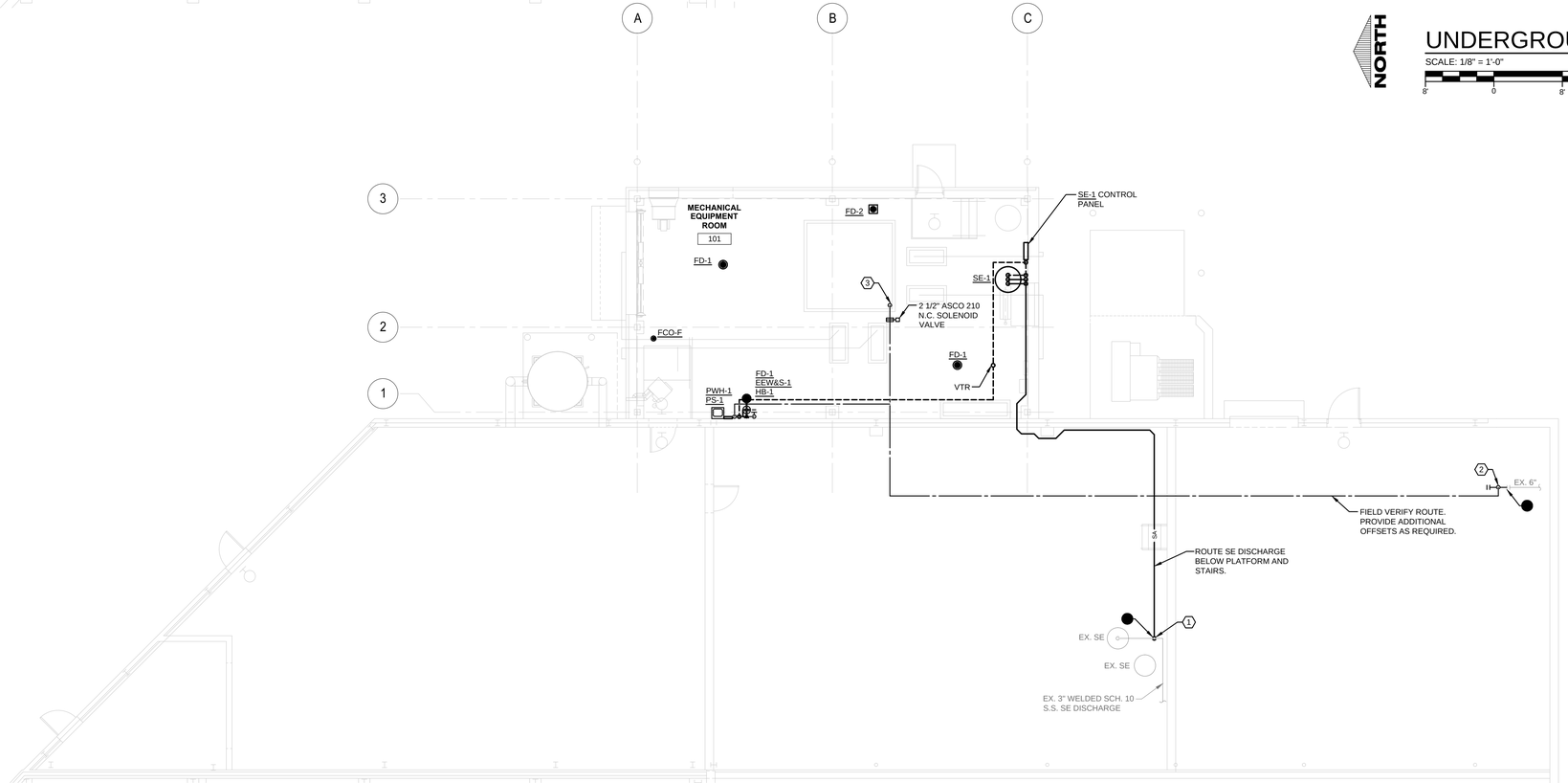

NORTH

FIRST FLOOR PLAN

SCALE: 1/8" = 1'-0"

8' 0 8' 16'

GehlFoods
N116 W15970 Main Street
Germantown, WI
262.251.8570

IN ASSOCIATION WITH:

EXCEL
ARCHITECTS • ENGINEERS • SURVEYORS
100 CAMELOT DRIVE
FOND DU LAC, WI 54935
PHONE: (920) 926-9800
WWW.EXCELENGINEER.COM

Author: M. OLK
Edited By:
Date Created:
Type:
Notes:

Sheet Title: UNDERGROUND AND FIRST FLOOR PLANS
Project: 1805360
Description: AMMONIA REFRIGERATION EXPANSION
Datastream ID:
Datastream Description:

Edit Date: APR. 4, 2018
Edit Time:
Version Author: M. OLK
Version Editor: M. OLK
Drawing No.
P1.1

GENERAL NOTES:

- SEE UNDERGROUND PLAN AND FIXTURE UNIT SCHEDULE FOR RUNOUT TRAP SIZE TO FIXTURE.

GENERAL NOTES:

- SEE FIXTURE UNIT SCHEDULE ON THIS SHEET FOR RUNOUT PIPING SIZE TO FIXTURE
- PIPING SIZED BASED ON TYPE L COPPER TUBING.

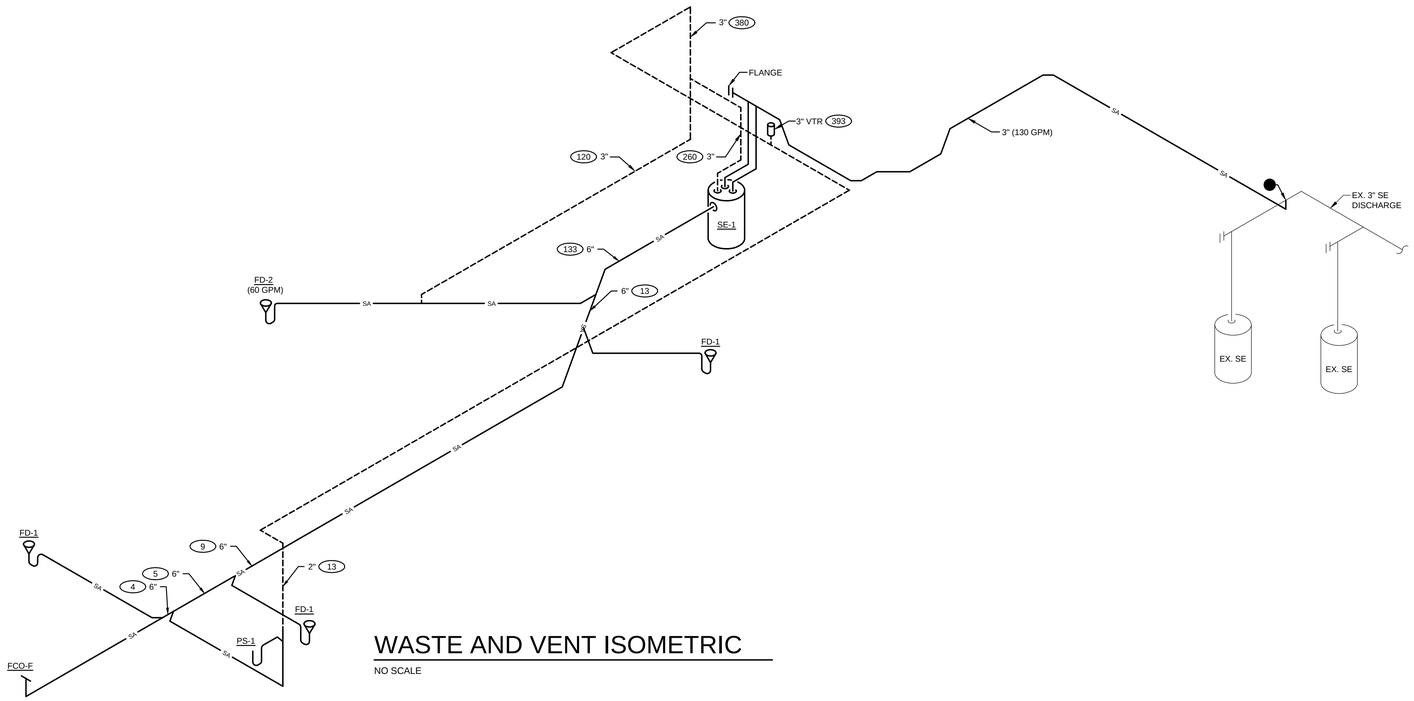

WASTE AND VENT ISOMETRIC

NO SCALE

WATER CALCULATIONS

WATER SERVICE AND DISTRIBUTION SIZING DATA

1	LOW PRESS. AT WELL CONTROLLER/ COMPRESSION TANK	60	PSIG
2	BUILDING FIXTURE UNITS	150	F.U.
3	PREDOMINATE FLUSH TYPE	TANK	
4	CONTINUOUS FLOW GPM	300	GPM
5	BUILDING DEMAND	355.0	GPM

WATER DISTRIBUTION SIZING - COLD WATER

					WSFU@8'/SEC
					Copper
A	PRESSURE AVAILABLE AT WELL CONTROLLER	60.0	PSIG	Pipe size	Flush tank
B	CONTROLLING FIXTURE:				
	TAG:	PS-1			
	ROOM NAME & NO.:	MECH "101"		1/2	2.5
	PRESSURE REQUIRED	45	PSIG	3/4	9.5
C	ELEV. DIFF. BETW. WELL CONTROL AND CONTROLLING FIXTURE	5	FEET	1	22.5
D	PRESSURE LOSS DUE TO WATER SOFTENER	0	PSIG	1 1/4	45
E	PRESSURE LOSS DUE TO MIXING VALVE	0	PSIG	1 1/2	100
F	PRESSURE AVAILABLE FOR PIPING PRESSURE DROP	12.8	PSIG	2	260
G	DEVELOPED LENGTH CONTROLLER TO CONTROLLING FIXTURE	150	FEET	2 1/2	469
H	EQUIVALENT LENGTH CONTROLLER TO CONTROLLING FIXTURE	225	FEET	3	752
I	PRESSURE AVAILABLE FOR UNIFORM LOSS	5.70	PSIG/100'	4	1792

MAX. DISTANCE OF HW BRANCH PIPING OFF RECIRC LOOP (FT)

MATERIAL	BRANCH SIZE	FIXTURE FLOW (GPM) 0.5	1	1.5	2	2.2	2.5
TYPE L COPPER	1/2"	14	25	25	25	25	25
TYPE L COPPER	3/4"	7	13	20	25	25	25

NOT ALL FIXTURE FLOWS MAY BE ON PROJECT.

FIXTURE UNITS

NO.	FIXTURE	WASTE UNITS	WASTE TOTAL	WASTE TRAP SIZE	COLD WATER UNITS	COLD WATER TOTAL	COLD WATER BRANCH SIZE	HOT WATER UNITS	HOT WATER TOTAL	HOT WATER BRANCH SIZE	TOTAL WATER UNITS	TOTAL WATER TOTAL
1	3/4" HOSEBIBB	-	-	-	4	4	3/4"	-	-	-	4	4
3	FLOOR DRAIN- 4"	4	12	4"	-	-	-	-	-	-	-	-
1	FLOOR DRAIN- 6" (60 GPM)	120	120	6"	-	-	-	-	-	-	-	-
1	LAV	1	1	1 1/4"	0.5	0.5	1/2"	0.5	0.5	1/2"	1	1
6	TOTAL		133			4.5			0.5			5

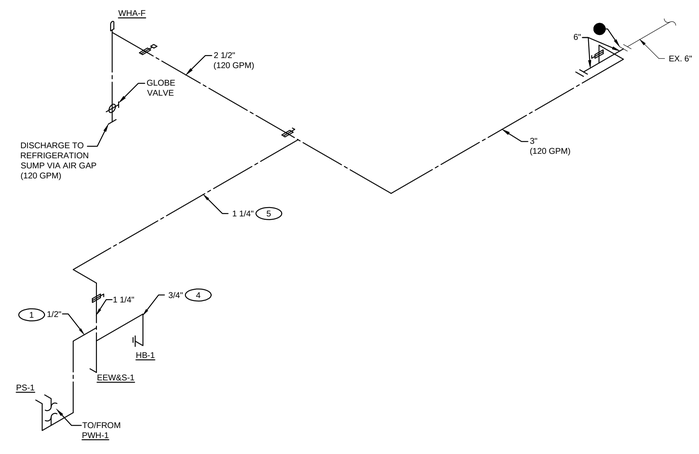

WATER ISOMETRIC

NO SCALE

GehlFoods
N116 W15970 Main Street
Germantown, WI
262.251.8570
IN ASSOCIATION WITH:
EXCEL
ARCHITECTS • ENGINEERS • SURVEYORS
500 CAMELOT DRIVE
FOND DU LAC, WI 54935
PHONE: (920) 926-9800
WWW.EXCELENGINEER.COM

Author: M. OLK
Edited By:
Date Created:
Type:
Notes:

Sheet Title: ISOMETRICS AND SCHEDULES
Project: 1805360
Description: AMMONIA REFRIGERATION EXPANSION
Datastream ID:
Datastream Description:

Edit Date: APR. 4, 2018
Edit Time:
Version Author: M. OLK
Version Editor: M. OLK
Drawing No.
P2.0

MAX. SPACING BETWEEN PIPE SUPPORTS AND MIN. HANGER ROD SIZES												
PIPE SIZE	STEEL			COPPER			PVC	CPVC	PEX	CAST IRON (2)	MIN. ROD
	WATER	VAPOR	MIN. ROD	WATER	VAPOR	MIN. ROD					
1/4"-1/2"	7'	8'	3/8"	5'	6'	3/8"	4'	3'	32"	5'	3/8"
3/4"	7'	9'	3/8"	5'	7'	3/8"	4'	3'	32"	5'	3/8"
1"	7'	9'	3/8"	6'	8'	3/8"	4'	3'	32"	5'	3/8"
1 1/4"	7'	9'	3/8"	7'	9'	3/8"	4'	4'	32"	5'	3/8"
1 1/2"	9'	12'	3/8"	8'	10'	3/8"	4'	4'	32"	5'	3/8"
2"	10'	12'	3/8"	8'	11'	3/8"	4'	4'	-	5'	3/8"
2 1/2"	11'	12'	3/8"	9'	12'	3/8"	4'	4'	-	5'	3/8"
3"	12'	12'	3/8"	10'	12'	3/8"	4'	4'	-	5'	3/8"
4"	12'	12'	3/8"	12'	12'	3/8"	4'	4'	-	5'	3/8"
6"	12'	12'	3/8"	12'	12'	3/8"	4'	4'	-	5'	3/8"
8"	12'	12'	1/2"	-	-	-	4'	4'	-	5'	3/8"
10"	12'	12'	1/2"	-	-	-	4'	4'	-	-	3/8"
12"	12'	12'	5/8"	-	-	-	4'	4'	-	-	3/8"
14"	12'	12'	5/8"	-	-	-	4'	4'	-	-	3/8"
16"	12'	12'	3/4"	-	-	-	4'	4'	-	-	3/8"
MAX.VERT. (1)	15'	15'	-	10'	10'	-	10'	10'	10'		-

(1) SUPPORT AT MINIMUM EVERY FLOOR LEVEL OR SPACING LISTED.
(2) SPACING MAY BE INCREASED TO 10' FOR 10' PIPE LENGTHS.
MSS = MANUFACTURER'S STANDARDIZATION SOCIETY
- INSTALL ADDITIONAL HANGERS WITHIN 12" OF ELBOWS AND TEES AND AT CONCENTRATED LOADS.
INCLUDING VALVES, FLANGES AND STRAINERS 2 1/2" AND LARGER.

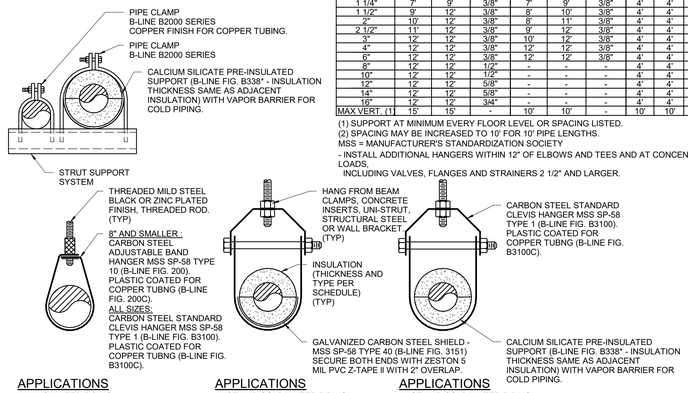

APPLICATIONS
- UNINSULATED PIPING

APPLICATIONS
- HOT AND COLD WATER PIPING

APPLICATIONS
- HOT AND COLD WATER PIPING

1 / P3.0 PIPE HANGER AND INSULATION DETAILS
NOT TO SCALE

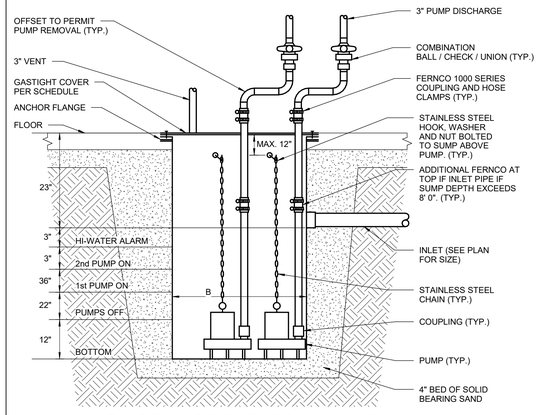

7 / P3.0 SEWAGE EJECTOR - 1 DETAIL
NOT TO SCALE

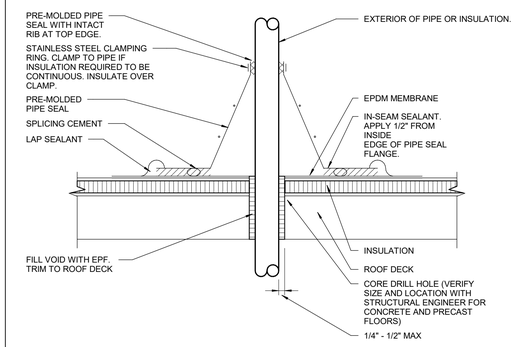

5 / P3.0 ROOF PIPE BOOT PENETRATION DETAIL
NOT TO SCALE

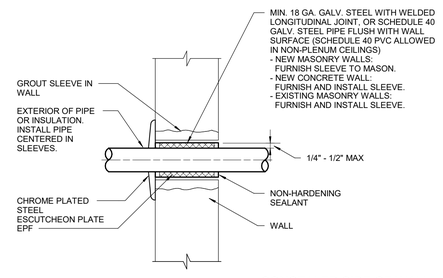

EXPOSED IN FINISHED ROOMS

CONCEALED SIDE OF WALL, EXPOSED IN MECH. EQUIP. ROOM, OR OUTDOORS

PIPE PENETRATION THRU MASONRY OR CONCRETE WALL

10 / P3.0
NOT TO SCALE

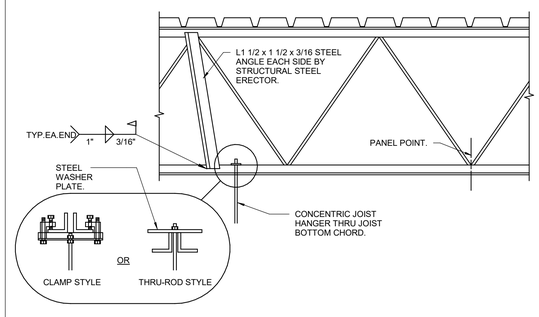

-NO ANGLE BRACE REQ'D IF LOAD OCCURS WITHIN 4" OF A JOIST PANEL POINT CENTERLINE
-DETAIL APPLIES TO LOADS ABOVE OR HUNG BELOW JOISTS IN EXCESS OF 100 LBS.
-LOADS HUNG FROM BOTTOM CHORD SHALL BE CONCENTRICALLY LOADED.

9 / P3.0 JOIST HANGER CONNECTION DETAIL
NOT TO SCALE

GehlFoods
N116 W15970 Main Street
Germantown, WI
262.251.8570

IN ASSOCIATION WITH:

EXCEL
ARCHITECTS ★ ENGINEERS ★ CONSTRUCTION
100 CAMELOT DRIVE
FOND DU LAC, WI 54935
PHONE: (920) 926-9800
WWW.EXCELENGINEER.COM

Author: M. OLK
Edited By:
Date Created:
Type:

Sheet Title: DETAILS
Project: 1805360
Description: AMMONIA REGRIGERATION EXPANSION
Datastream ID:
Datastream Description:

Edit Date: APR. 4, 2018
Edit Time:
Version Author: M. OLK
Version Editor: M. OLK
Drawing No.
P3.0

PIPE SCHEDULE

SERVICE	LOCATION	PIPE SIZE	PVC PIPE: SCH. 40 PRESSURE RATED ASTM D1785	PVC PIPE: SCH. 80 PRESSURE RATED ASTM D1785	PVC PIPE: DWV NON-PRESS. RATED ASTM F891	PVC PIPE: SCH. 40 NON-PRESS. RATED ASTM D1784, D2665	PVC PIPE: SDR 35 NON-PRESS. ASTM D3034	PVC FITTINGS: SCH. 40 ASTM D 2466	PVC FITTINGS: SCH. 80 ASTM D 2467	PVC FITTINGS: SCH. 40 DWV ASTM D2665	PVC JOINT: ASTM F656 PRIMER, ASTM D2564 SOLVENT CEMENT	CPVC PIPE: SCHEDULE	CPVC PIPE: ASTM D2846 - SDR 11	CPVC PIPE: ASTM D1784 CLASS 23447, F441	CPVC PIPE: ASTM F2618	CPVC FITTING: ASTM D1784, F2618	CPVC FITTING: ASTM D1784, F439	CPVC JOINT: SOLVENT CEMENT ASTM F493	CPVC JOINT: SOLVENT CEMENT ASTM F493, NSF 14	STAINLESS STEEL PIPE: 304 ASTM A312	STAINLESS STEEL PIPE: SCHEDULE	STAINLESS STEEL FITTINGS: ASTM A403, GR. WP304 BUTT WELDED	STAINLESS STEEL FITTINGS: ASTM A 351 THREADED	STAINLESS STEEL FITTINGS: ASTM A403 WPW OR A403 CR TYPE 304 OR 316 STAINLESS STEEL GROOVED FITTING, (5)	STAINLESS STEEL FITTINGS: ASME A112.3.1 SOCKET WELDED	STAINLESS STEEL JOINTS: COUPLING JOINT (5) (17)	STAINLESS STEEL JOINTS: COLD PRESS MECHANICAL JOINT (4)	STEEL PIPE: BLACK STEEL	STEEL PIPE: GALVANIZED	STEEL PIPE: DUCTILE	STEEL PIPE: ASTM A53 GR B SCHEDULE	STEEL FITTINGS: CAST IRON THREADED ASTM A126/ANSI B16.4	STEEL FITTINGS: CAST IRON THREADED ANSI B16.12	STEEL FITTINGS: MALLEABLE IRON THREADED ASME/ANSI B16.3	STEEL FITTINGS: COUPLING JOINT	STEEL FITTINGS: CLASS
WATER	ABOVE GROUND	<4"																									X		X	40	X				125
SANITARY	ABOVE GROUND	ALL			X					X	X																								
DRAIN AND VENT	UNDERGROUND INSIDE BLDG	ALL										40			X	X		X																	
SEWAGE EJECTOR DISCHARGE	ALL	ALL																		X	10	X													

HOSE BIBB SCHEDULE (HB)

NO.	LOCATION	FREEZE PROOF	BACKFLOW PREVENTER	WALL FLANGE	CONTROL	MISC.	MFR/MODEL
1	INTERIOR	NO	WATTS SERIES 8, ASSE 1011	NO	T HANDLE	-	CHICAGO 293

- ACCEPTABLE MANUFACTURERS: WATTS, WOODFORD, NIBCO, CHICAGO.

PROCESS SINK SCHEDULE (PS)

NO.	SINK: COMPARTMENT NO.	SINK: COMPARTMENT DEPTH	SINK: OVERALL SIZE	SINK: MODEL	FAUCET: NO. HOLES	FAUCET: SPOUT REACH	FAUCET: SPOUT HEIGHT	FAUCET: GPM	FAUCET: HANDLE	FAUCET: FINISH	FAUCET: SPRAY	FAUCET: MODEL
1	1	7"	19" x 18"	COLUMBIA 505L	1	7.5"	10"	(1)	KNEE	CHROME	NO	COLUMBIA 2003L (4)

- ACCEPTABLE MANUFACTURERS:
  - -SINK: SLOAN, ELKAY, COLUMBIA.
  - -FAUCETS: SLOAN, ELKAY, COLUMBIA.
  - -STOPS AND SUPPLIES: KOHLER, BRASSCRAFT, DEARBORN, KEENEY, MCGUIRE.
  - -DRAINS AND TRAPS: KOHLER, DEARBORN, KEENEY, MCGUIRE, BRASSCRAFT, PASCO.
- 18 GA. 304 S.S. SINK, ANGLE SUPPLIES WITH HANDLE STOPS WITH BRASS STEMS (BRASSCRAFT OCR1912AZX C). PROVIDE EACH COMPARTMENT WITH STAINLESS STEEL STRAINER AND STAINLESS STEEL TAILPIECE (ELKAY LK-18B), AND 1-1/2" "P" TRAP (SEE NOTES BELOW AND DETAILS FOR MATERIAL REQUIREMENTS).

(1) PROVIDE WITH 1 GPM AERATOR.

(4) SINK WITH RAISED OUTER RIM, FULL LENGTH HIGH BACKSPLASH, BRUSHED FINISH ON EXPOSED SURFACES, STAINLESS STEEL GRID STRAINER (COLUMBIA 1010), STAINLESS STEEL TAILPIECE, PVC P-TRAP AND MOUNTING CLIP. BACKSPLASH MOUNTED KNEE PADDLE OPERATED GOOSENECK FAUCET.

WATER HAMMER ARRESTOR SCHEDULE (WHA)

NO.	OVERALL LENGTH	CONNECTION SIZE (NPT)	PRECHARGE PRESSURE PSI	CAPACITY CUBIC INCHES	MAX. SYSTEM PRESSURE PSIG	MODEL	MFR
AA	4"	3/8"	60.0	-	150	660-GTR1B	"PRECISION PLUMBING PRODUCTS"
A	6.25"	1/2"	60.0	5	150	SC-500A	"PRECISION PLUMBING PRODUCTS"
B	7.25"	3/4"	60.0	7	150	SC-750B	"PRECISION PLUMBING PRODUCTS"
C	9.5"	1"	60.0	11	150	SC-1000C	"PRECISION PLUMBING PRODUCTS"
D	9.25"	1"	60.0	20	150	SC-1250D	"PRECISION PLUMBING PRODUCTS"
E	11"	1"	60.0	29	150	SC-1500E	"PRECISION PLUMBING PRODUCTS"
F	12"	1"	60.0	36	150	SC-2000F	"PRECISION PLUMBING PRODUCTS"

- ACCEPTABLE MANUFACTURERS: PRECISION PLUMBING PRODUCTS, SIOUX CHIEF, WATTS, ZURN-WILKINS.
- NOT ALL WHA SCHEDULED ARE USED ON THE PROJECT.

CLEANOUT SCHEDULE

NO.	LOCATION	SIZES	BODY MAT'L	PLUG MAT'L	ACCESS COVER MAT'L	ACCESS COVER MISC.	MISC.	FIGURE	REMARKS
FCO-F	FORK LIFT TRAFFIC AREAS	2" - 6"	C.I.	PVC	C.I.	EXTRA HVY DUTY (4)	-	Z-1400-DC	"ZURN"

- ACCEPTABLE MANUFACTURERS: J.R. SMITH, SCHIER, JOSAM, WADE, ZURN.
- RECESSED TAPER THREAD PLUG WITH SLOTTED RECESS.

(4) SAFE LIVE LOAD PER ANSI STD A112.36.2M BETWEEN 7,500 AND 10,000 LBS.

DRAIN SCHEDULE

NO.	TYPE	APPLICATION	OUTLET SIZE	BODY MAT'L	STRAINER/TOP MAT'L	STRAINER/TOP SIZE	MISC.	MODEL	REMARKS
FD-1	FLOOR	EQ. RM. / MED. DUTY	2"-4" (2)	CAST IRON	CAST IRON	7" DIA	-	Z-507	"ZURN"
FD-2	FLOOR	FLOOR SINK	6"	CAST IRON	CAST IRON	12" x 12"	-	49320A-LF-4	"JOSAM"

- ACCEPTABLE MANUFACTURERS: ZURN, J.R. SMITH, JOSAM, WADE, WATTS, SCHIER, KUSEL, SIOUX CHIEF.

(2) AS NOTED ON DRAWINGS

INSULATION SCHEDULE

SERVICE	LOCATION	INSULATION THICKNESS & TYPE (1)	INSULATION JACKET
COLD WATER	GENERAL BUILDING	1/2" RIGID F.G. OR ELAST. FOAM (10)	30 MIL PVC

NR = NOT REQUIRED

(10) INSULATION NOT REQUIRED FOR EXPOSED FINAL PIPING CONNECTIONS TO FIXTURES.

ELECTRICAL/STARTER/DISCONNECT SCHEDULE

NO.	LOCATION	ELECTRICAL DATA: HP	KW	AMPS	MCA	MOP	VOLT	PH.	STARTER: TYPE	STARTER: LOCATION	STARTER: FURN. BY	STARTER: ACCESS-ORIES	DISCONNECT: DIS-CONNECT	DISCONNECT: FURN. BY	REMARKS
PWH-1	101	-	8.0	-	-	-	208	1	INTEG	INTEGRAL	EM	-	R	EC	H.W.
SE-1 POWER	101	(2)@ 1	-	-	-	-	208	1	INTEG	CONTR. PANEL	EM	HOA	R	EM	(2)
SE-1 ALARM	101	-	-	-	-	-	120	1	-	-	-	-	NR	-	(3)(4)

STARTER TYPE:

INTEG.= INTEGRAL: PROVIDED INTEGRAL WITH EQUIPMENT.

FURNISHED BY:
- EM = EQUIPMENT MANUFACTURER
- PC = PLUMBING CONTRACTOR
- EC = ELECTRICAL CONTRACTOR
- HC = HEATING CONTRACTOR

ACCESSORIES:
- HOA = HAND-OFF-AUTO
- PL = PILOT LIGHT
- PB = PUSH BUTTON
- 2-SP = TWO SPEED
- RV = REDUCED VOLTAGE

DISCONNECT:
- NR= NOT REQUIRED
- R = REQUIRED
- WP= WEATHERPROOF
- F= FUSED

REMARKS:
- H.W.= HARD WIRED
- REC.=RECEPTACLE
- S.REC.=SWITCHED RECEPTACLE

- ACCEPTABLE MANUFACTURERS: ALLEN BRADLEY, CUTLER HAMMER, SQUARE D, GENERAL ELECTRIC.
- VERIFY VOLTAGE AND PHASE WITH ELECTRICAL CONTRACTOR BEFORE ORDERING EQUIPMENT.
- FURNISH MOTOR STARTERS TO E.C. FOR INSTALLATION AND WIRING WHEN THE STARTER SCHEDULE CALLS FOR P.C. TO FURNISH.

(2) ELECTRICAL CONTRACTOR SHALL HARD WIRE TO CONTROL PANEL, AND TERMINATE POWER WIRING FROM PUMPS TO CONTROL PANEL. PLUMBING CONTRACTOR SHALL PROVIDE CONTROL WIRING FROM CONTROL PANEL TO FLOATS.

(3) EC SHALL HARD WIRE 120 VOLT POWER TO CONTROL PANEL FOR ALARMS. PLUMBING CONTRACTOR SHALL PROVIDE CONTROL WIRING FROM CONTROL PANEL TO ALARM FLOAT.

(4) PUMP POWER SHALL BE ON A SEPARATE CIRCUIT FROM PUMP ALARM.

SEWAGE EJECTOR SCHEDULE (SE)

NO.	LOC.	PUMP: NO.	PUMP: GPM EA.	PUMP: HEAD (FT)	PUMP: RPM	PUMP: HP EA.	PUMP: TYPE	PUMP: MODEL	PUMP: MFR	SUMP (1): MATERIAL	SUMP (1): COVER W/ GASKET	REMARKS
1	101	2	130	55	3500	1	WASTE	WS10BHF	"GOULDS"	FIBERGLASS	STEEL (3)	(5)

- ACCEPTABLE MANUFACTURERS:
  - -PUMP: ZOELLER, WEIL, LITTLE GIANT, LIBERTY PUMPS.
  - -SUMP: TOPP INDUSTRIES, AK INDUSTRIES.

(1) SEE DETAIL FOR SUMP AND CONTROL LEVEL DIMENSIONS. PROVIDE SUMP WITH UPPER ANCHOR FLANGE.

(3) PROVIDE "TOPP INDUSTRIES" C36DSA DUPLEX COVER WITH INSPECTION PLATE, COVER PLATE, DISCHARGE/VENT FLANGES AND CORD GROMMETS.

(5) PROVIDE "LIBERTY PUMP" OR EQUIVALENT AE-SERIES DUPLEX CONTROLLER. THREE 20' CONTROL FLOAT SWITCHES, ALARM LIGHT AND HORN, INDIVIDUAL PUMP RUN INDICATOR LIGHTS, HOA SWITCH FOR EACH PUMP, DRY AUX CONTACTS, NEMA 1 ENCLOSURE, AUTOMATIC ALTERNATOR, MAGNETIC STARTER AND CIRCUIT BREAKER FOR EACH PUMP.

POINT OF USE WATER HEATER SCHEDULE (PWH)

NO.	LOC.	APPLICATION	SIZE L x W x H	UNIT WARR.	KW	VOLTAGE/ PHASE	AMPS	TEMP. RISE /GPM	ACTIVATION FLOW GPM	MIN. PRESS. REQ'D	MODEL	REMARKS
1	101	HAND WASH	11.75" x 7.5" x 2.75"	1 YEAR	8	208/1	38.0	55	0.7	45	E-80S/208	"CHRONOMITE" (1)

- ACCEPTABLE MANUFACTURERS: BRADFORD WHITE, EEMAX, CHRONOMITE.
- HEATER WITH FLOW SWITCH TO ALLOW HEATER OPERATION. REPLACEABLE CARTRIDGE INSERT.

(1) ON/OFF HEAT CONTROL WITH FLOW

EMERGENCY EYE WASH AND SHOWER SCHEDULE (EEW&S)

NO.	MOUNTING	EYEWASH: BOWL MAT'L	EYEWASH: BOWL COVER	EYEWASH: FACE SPRAY	EYEWASH: OPERATION	PIPE SUPPORT MAT'L	VALVE & TRIM MAT'L	SHOWER HEAD	TOTAL FLOW GPM	TMV SETTING DEG. F	MODEL	REMARKS
1	PEDESTAL	S.S.	NO	YES	HAND	S.S.	S.S.	S.S.	24.5	-	SE-625-SS	"SPEAKMAN"

- ACCEPTABLE MANUFACTURERS: SPEAKMAN.
- PROVIDE EYEWASH WITH CHROME PLATED YOKE ASSEMBLY WITH EYE WASH HEADS AND SPRAYHEAD COVERS, STRAINER, MANUALLY OPERATED 1/2" STAY-OPEN BALL VALVE, 1 1/4" WASTE CONNECTION, AND WALL MOUNTABLE IDENTIFICATION SIGN.
- PROVIDE SHOWER WITH 1" IPS STAY-OPEN BALL VALVE OPERATED BY A STAINLESS STEEL PULL ROD WITH TRIANGULAR HANDLE.

GehlFoods
N116 W15970 Main Street
Germantown, WI
262.251.8570

IN ASSOCIATION WITH:

EXCEL
ARCHITECTS ◆ ENGINEERS ◆ CONSULTING
100 CAMELOT DRIVE
FOND DU LAC, WI 54935
PHONE: (920) 926-9800
WWW.EXCELENGINEER.COM

Author: M. OLK
Edited By:
Date Created:
Type:

Sheet Title: SCHEDULES
Project: 1805360
Description: AMMONIA REGRIGERATION EXPANSION
Datastream ID:
Datastream Description:

Edit Date: APR. 4, 2018
Edit Time:
Version Author: M. OLK
Version Editor: M. OLK
Drawing No.
P4.0

HVAC SPECIFICATIONS

DIVISION 23 HVAC

00 72 00 GENERAL CONDITIONS

A. THE AIA GENERAL CONDITIONS A201 LATEST EDITION IS A PART OF THESE DOCUMENTS. COPIES ARE ON FILE AT THE OFFICE OF EXCEL ENGINEERING, INC.

01 11 00 GENERAL REQUIREMENTS

A. THE PLANS AND SPECIFICATIONS ARE INTENDED TO GIVE A DESCRIPTION OF THE WORK. NO DEVIATION FROM THE PLANS AND SPECIFICATIONS SHALL BE MADE WITHOUT THE WRITTEN CONSENT OF EXCEL ENGINEERING, INC. THE CONTRACTOR IS TO CLARIFY ANY DISCREPANCIES WITH EXCEL ENGINEERING, INC. PRIOR TO BEGINNING WORK. THE CONTRACTOR SHALL VISIT THE SITE TO VERIFY EXISTING CONDITIONS AND ACCESS TO THE WORK AREA.
B. SUBSTITUTIONS
1. CONTRACTOR SHALL PROVIDE ALL SUPPORTING DATA AND ASSUME THE BURDEN OF PROOF THAT ANY SUBSTITUTE IS EQUIVALENT AS TO APPEARANCE, CONSTRUCTION, CAPACITY, AND PERFORMANCE. THE JUDGMENT OF EQUIVALENCY SHALL BE MADE BY THE ENGINEER AT THE TIME OF SHOP DRAWING REVIEW, NOT DURING BIDDING.
2. WHERE SUBSTITUTE EQUIPMENT REQUIRES REDESIGN OF ANY PART OF THE PROJECT, THE COST OF REDESIGN AND ADDITIONAL COSTS OF THE WORK SHALL BE PAID BY THE CONTRACTOR. REDESIGN SHALL BE SUBJECT TO THE APPROVAL OF ALL AUTHORITIES HAVING JURISDICTION OVER THE WORK INCLUDING THE ARCHITECT/ENGINEER.
3. CONTRACTOR SHALL ASSUME ALL COORDINATION RESPONSIBILITIES FOR SUBSTITUTE EQUIPMENT INCLUDING COORDINATION ACROSS TRADES AND COORDINATION OF PREVIOUSLY REVIEWED AND APPROVED SHOP DRAWING SUBMITTALS, SHOULD THESE SHOP DRAWINGS BE AFFECTED BY THE SUBSTITUTED EQUIPMENT.
C. IN AS MUCH AS THE SPECIFICATIONS ARE BRIEF, THE CONTRACTOR SHALL PROVIDE WORKMANSHIP THAT IS OF THE BEST QUALITY WITH THE BEST POSSIBLE APPEARANCE AND UTILITY. FAULTY WORK SHALL BE REPAIRED OR REPLACED AT NO COST TO THE OWNER. INDUSTRY STANDARDS SHALL BE USED AS THE GUIDE FOR QUALITY OF MATERIALS AND WORKMANSHIP.
D. SHOP DRAWINGS, PRODUCT DATA, TEST RESULTS, PROJECT CLOSEOUT DOCUMENTS:
1. SUBMIT FOR APPROVAL HVAC SHOP DRAWINGS, PRODUCT DATA, TEST RESULTS AND SAMPLES INDICATED IN THE CONSTRUCTION ADMINISTRATION SUBMITTAL LIST (CASL).
2. SHOP DRAWINGS SHALL CLEARLY INDICATE SPECIFIC MODEL BEING PROVIDED WHERE CUT SHEETS SHOW MULTIPLE MODELS.
3. FAILURE TO SUBMIT SHOP DRAWINGS SHALL NOT RELIEVE THE CONTRACTOR FROM PROVIDING THE SPECIFIED EQUIPMENT AND MATERIALS.
4. PHYSICAL SAMPLES FOR FINISHES ARE TO BE SUBMITTED TO EXCEL ENGINEERING, INC. FOR APPROVAL PRIOR TO INSTALLATION.
5. BUILDING COMPONENTS REQUIRING SUBMISSION "FOR RECORD" TO THE AUTHORITY HAVING JURISDICTION REQUIRE SEALED AND SIGN HARD COPIES, PROVIDE THREE (3) HARD COPIES WITH WET SEAL AND ORIGINAL SIGNATURE.
6. TEST RESULTS SHALL BE SUBMITTED FOR REVIEW WITHIN 24 HOURS OF COMPLETION OF TEST.
7. CONTRACTOR SHALL ALLOW 10 WORKING DAYS IN SCHEDULE FOR A/E TO REVIEW SUBMITTALS. IF SUBMITTALS REQUIRE AN EXPEDITED REVIEW PROCESS, CONTACT EXCEL ENGINEERING, INC. PRIOR TO SUBMITTING THE SUBMITTAL(S) TO MAKE THE APPROPRIATE ARRANGEMENT.
8. SUBMITTALS REQUIRING RESUBMISSION SHALL HAVE CHANGES MADE TO A PREVIOUSLY REVIEWED SUBMITTALS DENOTED WITH REVISION CLOUDS AND TAGS IDENTIFYING CHANGES.
9. CONSTRUCTION ADMINISTRATION SUBMITTAL LIST:
   a. DUCTWORK
   b. DUCTWORK ACCESSORIES
   c. INSULATION
   d. PIPING
   e. PIPE HANGERS
   f. VALVES
   g. LOUVERS
   h. FANS
   i. GAS PRESSURE REGULATORS
   j. GAS UNIT HEATERS
   k. TEMPERATURE CONTROLS
   l. TEST AND BALANCE REPORT
10. PROJECT CLOSEOUT
   a. PROVIDE HVAC EQUIPMENT OPERATING AND MAINTENANCE MANUALS TO THE OWNER PER IMC 364.0313(3).
   b. AS-BUILT DRAWINGS SHALL BE MARKED ON A FINAL SET OF DRAWINGS WHICH INCLUDES ALL REVISIONS.

23 05 00 BASIC HVAC REQUIREMENTS

A. HVAC CONTRACTOR SHALL VERIFY REQUIREMENTS FOR TEMPORARY HEATING WITH GENERAL CONTRACTOR AND INCLUDE IN HIS SCOPE OF WORK WHEN DIRECTED BY G.C.. INSTALL IN ACCORDANCE WITH ALL CODE AND OSHA REQUIREMENTS FOR CONSTRUCTION PROJECTS.
B. DETAILS AND SCHEDULES ARE SHOWN TO AID THE CONTRACTOR AND ARE NOT MEANT TO BE INCLUSIVE OF ALL DEVICES. PROVIDE REQUIRED EQUIPMENT AND ACCESSORIES FOR A COMPLETE INSTALLATION.
C. INSTALL ALL EQUIPMENT PER MANUFACTURER'S INSTALLATION INSTRUCTIONS AND REQUIREMENTS. PROVIDE ADDITIONAL WORK AND MATERIALS AS REQUIRED.
D. COORDINATE INSTALLATION OF HVAC WORK WITH THE OTHER CONTRACTORS TO AVOID CONFLICTS WITH OTHER WORK.
E. PROVIDE ALL CUTTING AND PATCHING NECESSARY FOR HVAC WORK INSTALLATION UNLESS THIS WORK IS IDENTIFIED TO BE THE WORK OF OTHER CONTRACTORS. PATCHING SHALL MATCH ADJACENT SURFACES. CORE DRILL OR SAW-CUT OPENINGS THROUGH EXISTING CONCRETE.
F. SEALANTS
1. HVAC CONTRACTOR SHALL PROVIDE ALL SEALANTS WHERE JOINT IS HIDDEN AND WHERE JOINT IS EXPOSED IN MECHANICAL ROOM.
2. SEALANT CONTRACTOR SHALL PROVIDE SEALANTS AT ALL EXPOSED LOCATIONS IN FINISHED ROOMS.
G. PROJECT COMPLETION
1. CLEAN GRILLES AND EQUIPMENT AND LEAVE IN PROPER WORKING CONDITION AT THE TIME OF FINAL CLEAN-UP.

23 05 13 MOTORS AND ELECTRICAL WORK

A. MOTORS
1. MANUFACTURERS: GENERAL ELECTRIC, LOUIS ALLIS, MARATHON, AND BALDOR.
2. MOTORS LESS THAN 250 WATTS: EQUIPMENT MANUFACTURER'S STANDARD AND NEED NOT CONFORM TO THESE SPECIFICATIONS.
3. DESIGN FOR CONTINUOUS OPERATION IN 40 DEGREES C ENVIRONMENT AND FOR TEMPERATURE RISE IN ACCORDANCE WITH NEMA MG 1 LIMITS.
4. SINGLE PHASE POWER (PERMANENT-SPLIT CAPACITOR MOTORS) WITH STARTING TORQUE EXCEEDING ONE FOURTH OF FULL LOAD TORQUE AND STARTING CURRENT UP TO SIX TIMES FULL LOAD CURRENT. CLASS A (50 DEGREES C TEMPERATURE RISE) INSULATION, MINIMUM 1.0 SERVICE FACTOR, PRELUBRICATED SLEEVE OR BALL BEARINGS, AUTOMATIC RESET OVERLOAD PROTECTOR.
5. THREE PHASE POWER (SQUIRREL CAGE MOTORS) WITH STARTING TORQUE BETWEEN 1 AND 1.1/2 TIMES FULL LOAD TORQUE AND STARTING CURRENT SIX TIMES FULL LOAD CURRENT. NEMA DESIGN B MOTOR AND INSULATION SYSTEM. MINIMUM 1.15 SERVICE FACTOR FOR OPEN DRIP-PROOF MOTORS, 1.0 (MINIMUM) FOR OTHER TYPES. MINIMUM 85% NOMINAL POWER FACTOR UNDER RATED LOAD CONDITIONS. GREASE LUBRICATED ANTI-FRICTION BALL BEARINGS, RATED FOR MINIMUM AFBMA 9, L-10 LIFE OF 200,000 HOURS.
6. MINIMUM NOMINAL EFFICIENCY: ASHRAE 90.1 - 2007, SECTION 10.4.1, TABLE 10.8.
B. STARTERS
1. SEE ELECTRICAL STARTER DISCONNECT SCHEDULE ON PLANS.

23 05 29 PIPE AND EQUIPMENT HANGERS AND SUPPORTS

A. MANUFACTURERS: B-LINE, EMPIRE INDUSTRIES, GLOBAL PIPE HANGER PRODUCTS, GRINNELL, NATIONAL PIPE HANGER, UNI STRUT.
B. ANGLES, CHANNELS, AND BEAMS: ASTM A36 AND A572 AS REQUIRED.
C. HANGERS SHALL NOT BE ATTACHED TO JOIST BRIDGING.
D. ATTACHMENT TO METAL DECK: HANGERS MAY BE ANCHORED TO METAL FLOOR/ROOF DECK IF ALL THE FOLLOWING CONDITIONS ARE MET:
1. MAXIMUM HANGER LOAD OF 50 LBS.
2. ANCHORED TO BOTTOM OF DECK FLUTES, NOT UPPER FLUTE.
3. ANCHOR LENGTH SHALL NOT EXCEED DECK DEPTH.
E. PIPE HANGERS AND SUPPORTS
1. SEE DETAILS ON PLANS FOR ADDITIONAL PIPE HANGER SPECIFICATIONS.
2. SEE SCHEDULE ON PLANS FOR HANGER SPACING.
3. CONFORM TO ASME B31.9 AND MANUFACTURER'S STANDARDIZATION SOCIETY (MSS) SP-58-2009.
4. INSTALL HANGERS AND SUPPORTS SO PIPING LIVE AND DEAD LOADS AND STRESSES FROM MOVEMENT WILL NOT BE TRANSMITTED TO CONNECTED EQUIPMENT. ADJUST HANGERS TO DISTRIBUTE LOADS EQUALLY ON ATTACHMENTS AND TO PROVIDE INDICATED PIPE SLOPES.

23 07 00 INSULATION

A. GENERAL
1. SEE INSULATION SCHEDULES ON PLANS FOR ADDITIONAL INFORMATION.
2. INSTALL MATERIALS IN ACCORDANCE WITH MANUFACTURER'S INSTRUCTIONS AND MICA PUBLICATION "NATIONAL COMMERCIAL AND INDUSTRIAL STANDARDS", 2011 SEVENTH EDITION.
3. CONTINUE INSULATION WITHOUT INTERRUPTIONS THROUGH WALLS AND FLOOR PENETRATIONS AND HANGERS.
B. FIBERGLASS (F.G.) INSULATION
1. FLEX. F.G.:
   a. GLASS FIBER INSULATION FACTORY LAMINATED TO FRK/FSK VAPOR RETARDER. LISTED THICKNESS IS NOMINAL.
   b. 0.75 LB/CU. FT., R=3.3 / NOMINAL INCH AT 75 DEG F.
   c. MAX 250 DEG F, JACKET MAX 150 DEG F, 0.02 PERM.
C. DUCT INSULATION REQUIREMENTS
1. INSULATE FITTINGS, JOINTS, FLANGES, FLEXIBLE CONNECTIONS, DAMPERS, AND IN-LINE ACCESSORIES WITHOUT INTERNAL LININGINSULATION WITH SAME MATERIAL AND THICKNESS AS SPECIFIED FOR THE DUCT SYSTEM. STOP AND POINT INSULATION AROUND ACCESS DOORS AND DAMPER OPERATORS TO ALLOW OPERATION WITHOUT DISTURBING WRAPPING.

23 11 23 NATURAL GAS PIPING AND ACCESSORIES

A. PIPING
1. INSTALL, INSPECT, TEST, AND PURGE GAS PIPING IN CONFORMANCE WITH NFPA 54, UTILITY COMPANY AND ALL OTHER GOVERNING CODES.
2. MAKE BRANCH CONNECTIONS TO THE MAIN FROM THE TOP OR SIDE.
B. GAS VALVES
1. UL LISTED FOR USE AS NATURAL GAS SHUTOFF.
2. BALL VALVES (MANUFACTURERS: NIBCO 585/580-70/UL, WATTS B6000UL): BRONZE BODY, THREADED ENDS, CHROME PLATED BRONZE BALL, FULL/CONVENTIONAL PORT, TEFLON SEAT, BLOWOUT-PROOF STEM, TWO-PIECE CONSTRUCTION, 150 PSIG WORKING PRESSURE.
C. GAS PRESSURE REGULATORS
1. CAST IRON BODY, ALUMINUM SPRING CASE, ALUMINUM ORIFICE, BUNA-N DIAPHRAGM, INTERNAL RELIEF VALVE SET TO RELIEVE AT 7-10" W.C. ABOVE NORMAL OUTLET PRESSURE SETTING OF 7" WC., TOPCOAT ENAMEL.
2. SENSUS MODELS 496, 61R2, 143-80, 243
3. FOR REGULATORS INSTALLED INDOORS, PIPE THE RELIEF VALVE VENT FULL SIZE TO THE OUTSIDE OF THE BUILDING AT A NON-HAZARDOUS LOCATION. INCREASE VENT SIZE ONE PIPE SIZE IF VENT LENGTH EXCEEDS 10 FEET. TERMINATE WITH AN ELBOW DOWN WITH A SCREEN OVER THE OPENING. DO NOT COMBINE VENTS.
4. MAXITROL 325 SERIES WITH VENT LIMITER ARE PERMITTED FOR INDOOR APPLICATIONS WHERE SUPPLYING LESS THAN 300,000 BTUH.

23 31 13 DUCTWORK

A. PERFORM WORK IN ACCORDANCE WITH THE LATEST EDITIONS OF SMACNA - HVAC DUCT CONSTRUCTION STANDARDS, NFPA 90A.
B. GENERAL
1. SEAL ALL OUTSIDE AIR DUCT JOINTS WATERTIGHT WITH SILICONE SEALANT.
2. PROVIDE TEMPORARY CLOSURES OF METAL OR TAPED POLYETHYLENE ON OPEN DUCTWORK TO PREVENT CONSTRUCTION DUST FROM ENTERING DUCTWORK SYSTEM.
3. INCREASE DUCT SIZES GRADUALLY, NOT EXCEEDING 15 DEGREES WHENEVER POSSIBLE. 30 DEGREE MAXIMUM.
C. DUCTWORK SEALANTS
1. MANUFACTURERS: HARDCAST SURE-GRIP 404 SOLVENT BASED DUCT SEALANT OR EQUIVALENT.
   a. SYNTHETIC RUBBER RESIN BASE.
   b. -20 TO 200 DEG F.
   c. PRESSURE CLASSES UP TO 10" W.C., MEETING SEAL CLASS A.
   d. MAXIMUM FLAME SPREAD OF 25, SMOKE DEVELOPED OF 50.
   e. APPLY MINIMUM 20-MIL THICK WET FILM AT TEMPERATURES BETWEEN 35-100 DEG F.
2. HARDCAST ALUMA-GRIP 701 OR EQUIVALENT PRESSURE SENSITIVE DUCT JOINT ROLLED SEALANT MAY BE USED IN PLACE OF MASTIC. SEALANT SHALL COMPLY WITH THE FOLLOWING:
   a. MILL FINISH ALUMINUM SUSTRATE WITH GRAY ADHESIVE.
   b. MINIMUM 30 MIL THICK
   c. MIN. 17 LB PER LINEAR INCH PEEL STRENGTH
   d. MAX FLAME SPREAD OF 25, MAX SMOKE DEVELOPED OF 50 WHEN TESTED IN ACCORDANCE WITH ASTM G-53.
   e. VOC: 0 G/L, COMPLIANT WITH LEED SCAQMD RULE 1168.
   f. PRESSURE CLASSES UP TO 10" W.C.
D. DUCT CLEANING
1. PROTECT DUCTWORK AGAINST ENTRY OF FOREIGN MATTER DURING CONSTRUCTION. PROVIDE TEMPORARY END CAPS AND SEALS. PROVIDE TEMPORARY FILTERS OVER RETURN OR EXHAUST AIR INLETS IF DUCTWORK IS USED DURING CONSTRUCTION.
2. REMOVE ALL DIRT AND FOREIGN MATTER AND CLEAN DIFFUSERS, REGISTERS, AND GRILLES BEFORE OPERATING FANS.

23 33 00 DUCTWORK ACCESSORIES

A. GENERAL - ALL DUCT ACCESSORIES SHALL BE CONSTRUCTED OF SAME MATERIAL AS DUCTWORK BEING INSTALLED IN.
B. CONTROL DAMPER INSTALLATION
1. RECEIVE CONTROL DAMPERS FROM TEMPERATURE CONTROL CONTRACTOR AND INSTALL DAMPERS.
2. DAMPER SECTIONS AND MULTIPLE SECTION ASSEMBLIES MUST BE COMPLETELY SQUARE AND FREE FROM RACKING, TWISTING, OR BENDING.
3. FOLLOW MANUFACTURER'S INSTRUCTIONS FOR INSTALLATION OF CONTROL DAMPERS.
4. INSTALL EXTENDED SHAFT OR JACKSHAFT PER MANUFACTURER'S INSTRUCTIONS.
5. PROVIDE A VISIBLE INDICATION OF DAMPER POSITION ON THE DRIVE SHAFT END.
6. AFTER INSTALLATION OF LOW-LEAKAGE DAMPERS WITH SEALS, CAULK BETWEEN FRAME AND DUCT OR OPENING TO PREVENT LEAKAGE AROUND PERIMETER OF DAMPER.

23 90 00 TEMPERATURE CONTROLS

A. MANUFACTURERS: AMERICAN AUTO-MATRIX, DELTA CONTROLS INC., HONEYWELL INTERNATIONAL INC., KMC, RELIABLE, SIEMENS BUILDING TECHNOLOGIES, TREND.
B. INSTALLER QUALIFICATIONS: AUTOMATIC CONTROL SYSTEM MANUFACTURER'S AUTHORIZED REPRESENTATIVE WHO IS TRAINED AND APPROVED FOR INSTALLATION OF SYSTEM COMPONENTS REQUIRED FOR THIS PROJECT.
C. ALL PRODUCTS USED IN THIS INSTALLATION SHALL BE NEW, CURRENTLY UNDER MANUFACTURE, AND SHALL BE APPLIED IN STANDARD OFF THE SHELF PRODUCTS. THIS INSTALLATION SHALL NOT BE USED AS A TEST SITE FOR ANY NEW PRODUCTS UNLESS EXPLICITLY APPROVED BY THE ENGINEER IN WRITING. SPARE PARTS SHALL BE AVAILABLE FOR AT LEAST 5 YEARS AFTER COMPLETION OF THIS CONTRACT.
D. ELECTRICAL COMPONENTS, DEVICES, AND ACCESSORIES: LISTED AND LABELED AS DEFINED IN NFPA 70, ARTICLE 100, BY A TESTING AGENCY ACCEPTABLE TO AUTHORITIES HAVING JURISDICTION, AND MARKED FOR INTENDED USE.
E. LABOR AND MATERIALS FOR THE CONTROL SYSTEM SPECIFIED SHALL BE WARRANTED FREE FROM DEFECTS FOR A PERIOD OF 12 MONTHS AFTER FINAL COMPLETION AND ACCEPTANCE. CONTROL SYSTEM FAILURES DURING THE WARRANTY PERIOD SHALL BE ADJUSTED, REPAIRED, OR REPLACED AT NO ADDITIONAL COST OR REDUCTION IN SERVICE TO THE OWNER.
F. POWER SUPPLIES: UL LISTED TRANSFORMERS WITH CLASS 2 CURRENT-LIMITING TYPE OR OVERCURRENT PROTECTION; LIMIT CONNECTED LOADS TO 80 PERCENT OF RATED CAPACITY. DC POWER SUPPLY SHALL MATCH OUTPUT CURRENT AND VOLTAGE REQUIREMENTS AND BE FULL-WAVE RECTIFIER TYPE.
G. POWER LINE FILTERING: INTERNAL OR EXTERNAL TRANSIENT VOLTAGE AND SURGE SUPPRESSION.
H. ELECTRONIC SENSORS/TRANSMITTERS
1. INSTALLATION
   a. INSTALL ALL SENSORS IN ACCORDANCE WITH THE MANUFACTURER'S RECOMMENDATIONS.
   b. INSTALL DEVICES WHICH HAVE ADJUSTMENT 48 INCHES ABOVE THE FLOOR OR COMPLY WITH CURRENT ADA REQUIREMENTS. INSTALL NON-ADJUSTABLE CONTROL SENSORS AT 60 INCHES ABOVE THE FLOOR.
   c. COORDINATE LOCATION OF THERMOSTATS, AND OTHER EXPOSED CONTROL SENSORS WITH PLANS AND ROOM DETAILS BEFORE INSTALLATION.
I. AUXILIARY CONTROL DEVICES
1. RELAYS: SEE ELECTRICAL STARTER DISCONNECT SCHEDULE.
J. ACTUATORS:
1. MANUFACTURERS: BELIMO AIRCONTROLS (USA), INC.
2. ELECTRONIC ACTUATORS: DIRECT-COUPLED TYPE DESIGNED FOR MINIMUM 50,000 FULL-STROKE CYCLES AT RATED TORQUE.
3. LISTED TO ISO 9001, CULUS, CE OR CSA.
4. DAMPERS
   a. SIZE FOR TORQUE REQUIRED FOR DAMPER SEAL AT LOAD CONDITION.
   b. DAMPER COUPLING: V-BOLT DUAL NUT CLAMP AND V-SHAPED, TOOTHED CRADLE.
5. MOUNT AND LINK CONTROL ACTUATORS PER MANUFACTURER'S INSTRUCTIONS.
6. MINIMUM NEMA TYPE 2 HOUSING.
7. OVERLOAD PROTECTION: ELECTRONIC OVERLOAD OR DIGITAL ROTATION-SENSING CIRCUITRY WITHOUT THE USE OF END SWITCHES.
8. POWER REQUIREMENTS: 24, 120 OR 230 VAC. MAXIMUM 10 VA AT 24 VAC.
9. PROPORTIONAL SIGNAL: 2- TO 10-V DC OR 4 TO 20 MA
10. POSITION INDICATOR: VISUAL SCALE INDICATING PERCENT OF TRAVEL.
11. TEMPERATURE RATING AS REQUIRED FOR APPLICATION.
12. PROVIDE SPRING RETURN ACTUATORS FOR OUTSIDE AIR DAMPERS.
13. CHECK OPERATION OF DAMPER/ACTUATOR COMBINATION TO CONFIRM THAT ACTUATOR MODULATES DAMPER SMOOTHLY THROUGHOUT STROKE TO BOTH OPEN AND CLOSED POSITIONS.
14. WARRANT ALL COMPONENTS FOR 2 YEARS.
K. MOTOR OPERATED DAMPERS
1. TWO-POSITION SHUTOFF DAMPERS MAY BE PARALLEL OR OPPOSED BLADE TYPE.
2. PROVIDE LOW LEAKAGE DAMPERS IN OUTSIDE AIR OR EXHAUST AIR DUCTWORK.
3. ALL DAMPERS SHALL BE AMCA 500 RATED.
4. RECTANGULAR- VELOCITY BELOW 1,500 FPM.
   a. MAXIMUM 2" DIFFERENTIAL PRESSURE.
   b. MAXIMUM VELOCITY 1,500 FPM.
   c. MAX PRESSURE DROP OF 24"X24" DAMPER 0.1" W.C. AT 1,500 FPM PER AMCA STD 500 FIG. 5.3.
   d. MIN. 16 GA. BLADES, MAXIMUM 6 INCHES WIDE AND 48 INCHES LONG, WITH THREE LONGITUDINAL GROOVES.
   e. 16 GAUGE HAT CHANNEL FRAME WITH REINFORCED CORNERS AND HOLES FOR DUCT MOUNTING
   f. LOW LEAKAGE
      1). CLASS 1A LEAKAGE RATED. MAXIMUM LEAKAGE RATE OF 4 CFM PER SQ. FT. AT 1" W.C. DIFFERENTIAL PRESSURE.
      2). GALVANIZED
         a). GREENHECK VCD-23, RUSKIN CD36, ARROW SERIES 395
         b). GALVANIZED-STEEL FRAME, DAMPER BLADES, FLEXIBLE METAL COMPRESSION JAMB SEALS. VINYL, PVC COATED OR TPE BLADE SEALS.
         c). 1/2 INCH ROUND OR HEX PLATED STEEL AXLES WITH SYNTHETIC OR BRONZE BEARINGS.
L. ELECTRICAL WIRING AND CONNECTION INSTALLATION
1. ALL CONTROL AND INTERLOCK WIRING SHALL COMPLY WITH NATIONAL AND LOCAL ELECTRICAL CODES.
2. ALL NEC CLASS 1 (LINE VOLTAGE) WIRING SHALL BE UL LISTED IN APPROVED RACEWAY PER NEC.
3. SEE ELECTRICAL SPECIFICATIONS FOR CONDUIT REQUIREMENTS.
4. ALL LOW-VOLTAGE WIRING SHALL MEET NEC CLASS 2 REQUIREMENTS. (LOW-VOLTAGE POWER CIRCUITS SHALL BE SUB-FUSED WHEN REQUIRED TO MEET CLASS 2 CURRENT-LIMIT).
5. ALL WIRING IN MECHANICAL, ELECTRICAL, OR SERVICE ROOMS AND WHERE SUBJECT TO DAMAGE SHALL BE INSTALLED IN RACEWAY.
6. WHERE NEC CLASS 2 (CURRENT-LIMITED) WIRES ARE IN CONCEALED AND ACCESSIBLE LOCATIONS, APPROVED CABLES NOT IN RACEWAY MAY BE USED PROVIDED THAT CABLES ARE UL LISTED FOR THE INTENDED APPLICATION.
7. DO NOT INSTALL CLASS 2 WIRING IN RACEWAY, BOXES AND PANELS CONTAINING CLASS 1 WIRING.
8. SUPPORT CABLES AND RACEWAYS FROM STRUCTURAL MEMBERS. CABLES AND RACEWAYS SHALL NOT BE SUPPORTED BY DUCTWORK, ELECTRICAL RACEWAYS, PIPING, OR CEILING SUSPENSION SYSTEMS. SECURE AND SUPPORT CABLE AT INTERVALS NOT EXCEEDING 30 INCHES AND NOT MORE THAN 6 INCHES FROM CABINETS, BOXES, FITTINGS, OUTLETS, RACKS, FRAMES, AND TERMINALS.
9. INSTALL WIRING IN SLEEVES WHERE IT PASSES THROUGH WALLS AND FLOORS. MAINTAIN FIRE RATING AT ALL PENETRATIONS.
10. SIZE OF WIRE AND RACEWAY SHALL BE THE RESPONSIBILITY OF THE CONTRACTOR, AND BE PER THE MANUFACTURER'S RECOMMENDATION AND NEC REQUIREMENTS.
11. INCLUDE ONE PULL STRING IN EACH RACEWAY 1" OR LARGER.
12. LOCATE CONTROL AND STATUS RELAYS IN DESIGNATED ENCLOSURES ONLY.
13. FLEXIBLE METAL RACEWAYS ARE NOT PERMITTED OVER 6 FEET.
14. MAINTAIN UPDATED (AS-BUILT) WIRING DIAGRAMS WITH TERMINATIONS IDENTIFIED AT THE JOB SITE.
M. INSTALLATION
1. INSTALL EQUIPMENT, PIPING, AND WIRING/RACEWAY PARALLEL TO BUILDING LINES (I.E., HORIZONTAL, VERTICAL, AND PARALLEL TO WALLS) WHEREVER POSSIBLE.
2. INSTALL ALL EQUIPMENT IN READILY ACCESSIBLE LOCATIONS AS DEFINED BY CHAPTER 1, ARTICLE 100, PART A OF THE NATIONAL ELECTRICAL CODE (NEC).
3. THE CONTRACTOR SHALL PROTECT ALL WORK AND MATERIAL FROM DAMAGE BY HIS WORK OR EMPLOYEES, AND SHALL BE LIABLE FOR ALL DAMAGE THUS CAUSED.
4. THE CONTRACTOR SHALL BE RESPONSIBLE FOR HIS WORK AND EQUIPMENT UNTIL FINALLY INSPECTED, TESTED, AND ACCEPTED. THE CONTRACTOR SHALL PROTECT ANY MATERIAL THAT IS NOT IMMEDIATELY INSTALLED.
N. CALIBRATING AND ADJUSTING:
1. CALIBRATE INSTRUMENTS.
2. MAKE THREE-POINT CALIBRATION TEST FOR BOTH LINEARITY AND ACCURACY FOR EACH ANALOG INSTRUMENT.
3. CALIBRATE EQUIPMENT AND PROCEDURES USING MANUFACTURER'S WRITTEN RECOMMENDATIONS AND INSTRUCTION MANUALS. USE TEST EQUIPMENT WITH ACCURACY AT LEAST DOUBLE THAT OF INSTRUMENT BEING CALIBRATED.
4. CONTROL SYSTEM INPUTS AND OUTPUTS:
   a. CHECK ANALOG INPUTS AT 0, 50, AND 100 PERCENT OF SPAN.
   b. CHECK ANALOG OUTPUTS USING MILLIAMPERE METER AT 0, 50, AND 100 PERCENT OUTPUT.
   c. CHECK DIGITAL INPUTS USING JUMPER WIRE.
   d. CHECK DIGITAL OUTPUTS USING OHMMETER TO TEST FOR CONTACT MAKING OR BREAKING.
   e. CHECK RESISTANCE TEMPERATURE INPUTS AT 0, 50, AND 100 PERCENT OF SPAN USING A PRECISION-RESISTANT SOURCE.
5. TEMPERATURE:
   a. CALIBRATE RESISTANCE TEMPERATURE TRANSMITTERS AT 0, 50, AND 100 PERCENT OF SPAN USING A PRECISION-RESISTANCE SOURCE.
   b. CALIBRATE TEMPERATURE SWITCHES TO MAKE OR BREAK CONTACTS.

23 90 10 SEQUENCE OF OPERATION

A. GAS UNIT HEATERS
1. MOUNT AND WIRE THERMOSTAT FURNISHED BY THE GAS UNIT HEATER MANUFACTURER.
B. E.F.-1
1. PROVIDE A REVERSE ACTING THERMOSTAT.
2. TURN E.F. ON WITH A RISE IN SPACE TEMPERATURE ABOVE SETPOINT.
3. TWO POSITION MOTOR OPERATED DAMPER AND ACTUATOR FURNISHED AND INSTALLED WITH FAN SHALL OPEN WHEN E.F. OPERATES.
4. FURNISH AND INSTALL A TWO POSITION MOTOR OPERATED DAMPER AND ACTUATOR IN THE OUTSIDE AIR INTAKE DUCT. INTERLOCK TO OPEN WHEN E.F. OPERATES.

23 95 00 TESTING, ADJUSTING AND BALANCING

A. QUALITY ASSURANCE
1. PERFORM TOTAL SYSTEM BALANCE IN ACCORDANCE WITH AABC NATIONAL STANDARDS FOR FIELD MEASUREMENT AND INSTRUMENTATION, TOTAL SYSTEM BALANCE OR NEBB PROCEDURAL STANDARDS FOR TESTING, BALANCING AND ADJUSTING OF ENVIRONMENTAL SYSTEMS, AND ASHRAE STANDARD 111.
2. THE TESTING, ADJUSTING AND BALANCING (TAB) CONTRACTOR SHALL BE AN INDEPENDENT COMPANY SPECIALIZING IN THE TESTING, ADJUSTING, AND BALANCING OF SYSTEMS WITH MINIMUM THREE YEARS EXPERIENCE AND NOT ASSOCIATED WITH THE SUPPLIERS OF EQUIPMENT OR THE INSTALLING CONTRACTOR.
3. PERFORM WORK UNDER SUPERVISION OF AABC CERTIFIED TEST AND BALANCE ENGINEER OR NEBB CERTIFIED TESTING, BALANCING AND ADJUSTING SUPERVISOR.
B. SUBMITTALS
1. CONTRACTOR SHALL SUBMIT THE FINAL TESTING AND BALANCING REPORT PRIOR TO PROJECT COMPLETION AND IN ADVANCE OF DATE OF OCCUPANCY. THE FINAL TESTING AND BALANCING REPORT SHALL COMPLY WITH DEPT. OF COMM. 64.0313. SUBMIT REPORTS ON AABC NATIONAL STANDARDS FOR TOTAL SYSTEM BALANCE OR NEBB FORMS.
2. SUBMIT THE DESIGN AND ACTUAL DATA FOR EACH SCHEDULED PIECE OF EQUIPMENT: MODEL; SUPPLY AND OUTSIDE AIR FLOWS; STATIC PRESSURE PROFILES OF ALL FANS; FAN RPM, BHP, AMPERAGE; FAN AND MOTOR SHEAVE, DIAMETER, BORE AND MAKE; BELT SIZE AND QUANTITY; MOTOR SHEAVE CENTER LINE AND OPERATOR DISTANCE; ROOM AIR FLOW; EQUIPMENT FLOW RATES AND PRESSURE DROPS.
C. INSTALLATION TOLERANCES
1. AIR HANDLING SYSTEMS: ADJUST SUPPLY SYSTEMS TO WITHIN PLUS OR MINUS 5 PERCENT OF DESIGN AND RETURN AND EXHAUST SYSTEMS TO PLUS OR MINUS 10 PERCENT OF DESIGN.
2. AIR OUTLETS AND INLETS: ADJUST TOTAL AIR FLOW TO SPACE TO WITHIN PLUS 10 PERCENT AND MINUS 5 PERCENT OF DESIGN.
3. ADJUST OUTLETS AND INLETS IN SPACE TO WITHIN PLUS OR MINUS 10 PERCENT OF DESIGN.
D. AIR SYSTEM BALANCE
1. VARY TOTAL SYSTEM AIR QUANTITIES BY ADJUSTING FAN SPEEDS.
E. FANS WITH FIXED MOTOR SHEAVES - TEST THE FAN EQUIPMENT. IF THE DESIGN CONDITIONS ARE NOT OBTAINED, CALCULATE THE FINAL FIXED MOTOR SHEAVE AND/OR BELTS REQUIRED TO OBTAIN DESIGN CONDITIONS. HEATING CONTRACTOR SHALL OBTAIN THE FINAL FIXED MOTOR SHEAVE AND BELT(S) FROM THE FAN MANUFACTURER AND TURN THEM OVER TO THE TAB CONTRACTOR FOR INSTALLATION.

SHEET INDEX

NUMBER	SHEET NAME
HVAC	
H0.1	LEGEND AND SPECIFICATIONS
H1.1	FIRST FLOOR PLAN

LEGEND

NOTE: ALL SYMBOLS SHOWN MAY NOT APPEAR ON DRAWINGS.

SYM.	ABBR.	IDENTIFICATION	SYM.	ABBR.	IDENTIFICATION
DUCTWORK					
		DUCT (R)ISE/(D)ROP			SA OR OA DUCT DOWN OR AWAY
		RADIUS ELBOW			EA DUCT DOWN OR AWAY
		SQUARE ELBOW WITH TURNING VANES			RA DUCT DOWN OR AWAY
		SQUARE ELBOW WITHOUT TURNING VANES		VD	VOLUME DAMPER
		SQUARE OR RECTANGULAR BRANCH TAKEOFF		BDD	BACKDRAFT DAMPER
		RECTANGULAR TO ROUND TAKEOFF		MOD	MOTOR OPERATED DAMPER
		TEE WITH TURNING VANES	SDS	DSD	DUCT SMOKE DETECTOR
		ROUND TO ROUND CONICAL TAKEOFF	F	FD	FIRE DAMPER
		ECCENTRIC TRANSITION	S	SD	SMOKE DAMPER
		CONCENTRIC TRANSITION	FS	FSD	FIRE/SMOKE DAMPER
		SQUARE TO ROUND TRANS.		SG	SUPPLY GRILLE
		DUCT CAP		EG,RG , TG	(E)XHAUST / (R)ETURN / (T)RANSFER GRILLE
	ALD	ACOUSTICALLY LINED DUCT (NOT ALWAYS SHOWN)	UCD	UCD	UNDERCUT DOOR (BY GC)
	SA	SUPPLY AIR DUCT UP	DTG (0 SF)	DTG	DOOR TRANSFER GRILLE
	OA	OUTSIDE AIR DUCT UP		FC	FLEXIBLE CONNECTION
	RA	RETURN AIR DUCT UP		AD	ACCESS DOOR
	EA	EXHAUST AIR DUCT UP			
MISCELLANEOUS AND CONTROLS				

EXHAUST FAN SCHEDULE (EF)

NO.	CFM	S.P. " W.C.	MAX BHP	MOTOR HP	FAN RPM	DRIVE	VFD	DISC.	MAX. SONES	MODEL	REMARKS
1	7,500	0.50	1.27	1-1/2	772	BELT	NO	(2)	25	SBE-3H36	"GREENHECK"

- ACCEPTABLE MANUFACTURERS: GREENHECK, ACME, COOK, PENN, CARNES, TRANE.
- SEE MOTOR SPECIFICATIONS FOR MOTOR REQUIREMENTS.
(2) PROVIDE PRE-WIRED NEMA 3R DISCONNECT SWITCH OR TWIST LOCK PLUG.
(8) PROVIDE GALVANIZED STEEL **WALL HOUSING** WITH COATED WELDED STEEL WIRE INLET GUARD, CLOSURE ANGLES, MODEL VCD-23 LOW LEAKAGE MOTOR OPERATED DAMPER.
WALL HOUSING FOR **INTERIOR** FAN INSTALLATION, AND FLUSH **EXTERIOR** MOUNTING (FOR ATTACHING HOOD FLUSH TO EXTERIOR WALL).
(9) FAN WALL HOUSING TO ACCOMMODATE "GREENHECK MODEL ESD-403" LOUVER MOUNTED AT DISCHARGE

GAS UNIT HEATER SCHEDULE (GUH)

NO.	CFM	ESP " W.C.	EAT F	LAT F	MBH IN	MBH OUT	MOTOR HP	DRIVE	CONTROL	TYPE	VENT DIA.	COMB. INLET DIA.	WGHT	MODEL	REMARKS
1	1,490	0	60	109	100	80	1/12	DIRECT	(3)	PWR-VENT	4" (6)	4"	150	HDS	"MODINE"

- ACCEPTABLE MANUFACTURERS: REZNOR, MODINE, TRANE.
- PROVIDE WITH 30 DEG DOWNTURN NOZZLE
(3) CONTROL BY TEMPERATURE CONTROL CONTRACTOR.
(6) PROVIDE WITH HORIZONTAL CONCENTRIC VENT KIT.

LOUVER SCHEDULE (L)

NO.	APPLICATION	CFM	SIZE D "	SIZE W "	SIZE H "	FREE AREA S.F.	MAX. APD " W.C.	SCREEN	MAT'L	FRAME	FINISH	MODEL	REMARKS
1	O.A. DUCTED	7,500	6	60	56	12.74	0.05	BIRD	ALUM.	CHANNEL	(1)	ESD-603	"GREENHECK" (2)
2	E.A. DUCTED	7,500	4	44	44	6.58	0.20	BIRD	ALUM.	CHANNEL	(1)	ESD-403	"GREENHECK" (2)(3)

- ACCEPTABLE MANUFACTURERS: GREENHECK, RUSKIN, CARNES, TITUS, AMERICAN WARMING AND VENTILATING, IAC, CESCO.
- BIRD SCREEN: 1/2"x 1/2" 19 GAUGE GALVANIZED WIRE.
- INTAKE LOUVERS SHALL MEET CLASS A REQUIREMENTS WHEN RATED ACCORDING TO AMCA 511-99 AND TESTED PER AMCA 500-L-99.
(1) BAKED ENAMEL - COLOR AS SELECTED BY ARCHITECT.
(2) PROVIDE WITH EXTENDED SILL.
(3) SIZE LOUVER TO FIT IN HOUSING OF EF-1

MAX. SPACING BETWEEN PIPE SUPPORTS AND MIN. HANGER ROD SIZES

PIPE SIZE	STEEL WATER	STEEL VAPOR	STEEL NAT. GAS	STEEL MIN. ROD	COPPER WATER	COPPER VAPOR	COPPER MIN. ROD	PVC CPVC	PEX	MIN. ROD
1/4"-1/2"	7'	8'	6'	3/8"	5'	6'	3/8"	4'	32"	3/8"
3/4"	7'	9'	8'	3/8"	5'	7'	3/8"	4'	32"	3/8"
1"	7'	9'	8'	3/8"	6'	8'	3/8"	4'	32"	3/8"
1 1/4"	7'	9'	10'	3/8"	7'	9'	3/8"	4'	32"	3/8"
1 1/2"	9'	12'	10'	3/8"	8'	10'	3/8"	4'	32"	3/8"
2"	10'	12'	10'	3/8"	8'	11'	3/8"	4'	-	3/8"
2 1/2"	11'	12'	10'	3/8"	9'	12'	3/8"	4'	-	3/8"
3"	12'	12'	10'	3/8"	10'	12'	3/8"	4'	-	3/8"
4"	12'	12'	10'	3/8"	12'	12'	3/8"	4'	-	3/8"
6"	12'	12'	10'	3/8"	12'	12'	3/8"	4'	-	3/8"
8"	12'	12'	-	1/2"	-	-	-	4'	-	3/8"
10"	12'	12'	-	1/2"	-	-	-	4'	-	3/8"
12"	12'	12'	-	5/8"	-	-	-	4'	-	3/8"
14"	12'	12'	-	5/8"	-	-	-	4'	-	3/8"
16"	12'	12'	-	3/4"	-	-	-	4'	-	3/8"
MAX VERT. (1)	15'	15'	-	-	10'	10'	-	10'	10'	-

(1) SUPPORT AT MINIMUM EVERY FLOOR LEVEL OR SPACING LISTED.
MSS = MANUFACTURER'S STANDARDIZATION SOCIETY
- INSTALL ADDITIONAL HANGERS WITHIN 12" OF ELBOWS AND TEES AND AT CONCENTRATED LOADS,
INCLUDING VALVES, FLANGES AND STRAINERS 2 1/2" AND LARGER.

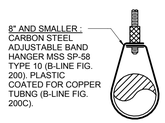

APPLICATIONS
- UNINSULATED PIPING

1 H1.1 PIPE HANGER AND INSULATION DETAILS
NOT TO SCALE

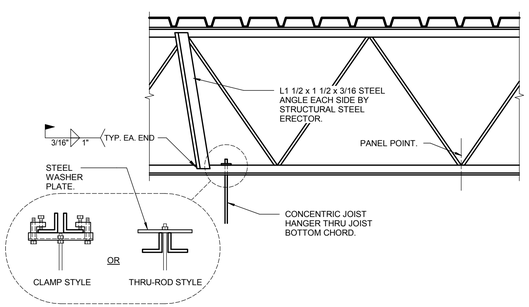

-NO ANGLE BRACE REQ'D IF LOAD OCCURS WITHIN 4" OF A JOIST PANEL POINT CENTERLINE
-DETAIL APPLIES TO LOADS ABOVE OR HUNG BELOW JOISTS IN EXCESS OF 100 LBS.
-LOADS HUNG FROM BOTTOM CHORD SHALL BE CONCENTRICALLY LOADED.

2 H1.1 JOIST HANGER CONNECTION DETAIL
NOT TO SCALE

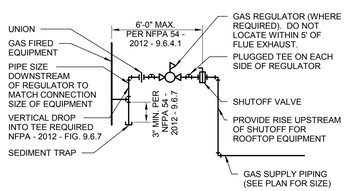

3 H1.1 GAS PIPE CONNECTION DETAIL
NOT TO SCALE

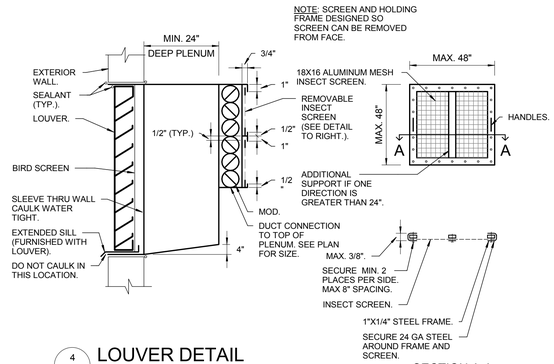

4 H1.1 LOUVER DETAIL
NOT TO SCALE

DUCTWORK AND DUCTWORK INSULATION SCHEDULE

SERVICE	LOCATION	DUCT MAT'L	SMACNA PRESS. CLASS	INSULATION RECTANGULAR DUCT	INSULATION ROUND DUCT	INSUL. JACKET
OUTSIDE AIR	CONCEALED	GALV. ST.	-1"	2" FLEX. F.G.	2" FLEX. F.G.	N.R.

N.R. = NOT REQUIRED
EXPOSED = VISIBLE FROM OCCUPIED SPACE, DOES NOT INCLUDE DUCTWORK IN MECHANICAL ROOMS.
CONCEALED = HIDDEN FROM VIEW BY WALLS AND CEILINGS. INCLUDES DUCTWORK IN MECHANICAL ROOMS.
MATERIALS:
GALV. STEEL: ASTM A653, LOCK FORMING QUALITY, 1.25 OUNCES/ S.F. ZINC COATING (G90 IN ACCORDANCE WITH ASTM A90 BOTH SIDES).
- ALL JOINTS, LONGITUDINAL AND TRANSVERSE SEAMS AND CONNECTIONS IN DUCTWORK SHALL BE SEALED PER IECC 503.2.7.

PIPE SCHEDULE

SERVICE	PIPE SIZE	STEEL PIPE BLACK STEEL	STEEL PIPE GALVANIZED	STEEL PIPE ASTM GR. B A53 F	STEEL PIPE ASTM GR. B A106 E	STEEL PIPE ASTM GR. B A106 S	STEEL PIPE SCHEDULE	STEEL FITTINGS CAST IRON THREADED ASTM A126/ANSI B16.4	STEEL FITTINGS MALLEABLE IRON THREADED ASME/ANSI B16.3	STEEL FITTINGS FORGED STEEL THREADED OR WELDED ASTM A105 GRADE II/ ANSI B16.11	STEEL FITTINGS SEAMLESS CARBON STEEL WELDED ASTM A234, GR. WPB/ ANSI 16.9	STEEL FITTINGS COLD PRESS MECHANICAL JOINT	STEEL FITTINGS COUPLING JOINT	STEEL FITTINGS CLASS	PEX	PE	MISC
GAS (INDOOR ≤ 5 PSIG)	1/2" - 3"	X		X	X	X	40	X	X	X	X	(6)		125/150			
GAS REGULATOR VENTS	ALL SIZES	X		X	X	X	40	X	X	X	X	(6)		125/150			

(6) VIEGA MEGAPRESS FITTING COMPLYING WITH ASTM A420 OR ASME B16.3. EPDM SEAL FOR WATER APPLICATIONS, HNBR SEAL FOR GAS.
10 YEAR WARRANTY IN MATERIAL AND WORKMANSHIP. INSTALL PER MFR INSTALLATION INSTRUCTIONS.

GAS APPLIANCE VENTING SCHEDULE

APPLIANCE	SERVICE	LISTING	CONTINUOUS FLUE TEMP RATING	VENT PRESSURE RATING	GAS APPL. CAT.	MATERIAL
POWER VENTED	VENT INSIDE	-	-	-	II	ASTM A527 22 GA GALV. STEEL (1)
UNIT HEATERS	VENT OUTSIDE	UL 441	400 DEG F	NEU., NEG.	II	B VENT (ALUM. INNER PIPE, AIR SPACE, GALV. STEEL OUTER PIPE) (2)

- MAINTAIN UL LISTED CLEARANCES TO COMBUSTIBLE MATERIALS.
- INSTALL IN ACCORDANCE WITH WISCONSIN CHAPTER SPS 65.0501.
(1) SEAL JOINTS WITH TEMPERATURE RESISTANT SEALANT.
(2) PROVIDE UL LISTED ACCESSORIES.

ELECTRICAL/STARTER/DISCONNECT SCHEDULE

SYM.	ELECTRICAL DATA HP	KW	AMPS	MCA	MOP	VOLT	PH.	STARTER TYPE	LOCATION	FURN. BY	AUX. CONTACT	ACCESS-ORIES	SMOKE DETECTOR	DISCONNECT DIS-CONNECT	FURN. BY	REMARKS
EF-1	1-1/2	-	-	-	-	460	3	COMB	101	HC	-	HOA	-	R	EM (2)	-
GUH-1	1/12	-	-	-	-	120	1	INTEG.	INTEGRAL	EM	-	-	-	R	EC	-

STARTER TYPE:
INTEG.= INTEGRAL: PROVIDED INTEGRAL WITH EQUIPMENT.
COMB= COMBINATION: COMBINE MAGNETIC STARTER AND NON-FUSED DISCONNECT SWITCH IN COMMON ENCLOSURE. LOCKABLE IN OPEN POSITION, MOLDED CAST TYPE MOTOR CIRCUIT PROTECTOR (MAGNETIC PROTECTION ONLY).

FURNISHED BY:
EM = EQUIPMENT MANUFACTURER
HC = HEATING CONTRACTOR
EC = ELECTRICAL CONTRACTOR

ACCESSORIES:
HOA = HAND-OFF-AUTO
PL =LED PILOT LIGHT
PB = PUSH BUTTON

DISCONNECT:
NR= NOT REQUIRED
R = REQUIRED
3R = NEMA 3R

REMARKS:
H.W.= HARD WIRED
REC.=RECEPTACLE

- ACCEPTABLE MANUFACTURERS: ALLEN BRADLEY, CUTLER HAMMER, SQUARE D, GENERAL ELECTRIC.
- VERIFY VOLTAGE AND PHASE WITH ELECTRICAL CONTRACTOR BEFORE ORDERING EQUIPMENT.
- FURNISH MOTOR STARTERS TO E.C. FOR INSTALLATION AND WIRING WHEN THE STARTER SCHEDULE CALLS FOR H.C. TO FURNISH.
(2) DISCONNECT FACTORY MOUNTED AND PREWIRED BY EQUIPMENT MANUFACTURER.

GENERAL NOTES

•VERIFY BUILDING OPENING AND CURB SIZES LISTED ON PLANS WITH ACTUAL EQUIPMENT SCHEDULED AND SUPPLIED. COORDINATE REQUIRED OPENING SIZES AND LOCATIONS WITH CONTRACTORS PROVIDING OPENING. SCHEDULES AND ACTUAL EQUIPMENT SIZES SHALL TAKE PRECEDENCE OVER SIZES SHOWN ON PLANS.

•DETAIL REFERENCES ON PLANS ARE TO AID THE CONTRACTOR IN IDENTIFYING THE APPLICABLE DETAIL. NOT ALL DETAILS, OR INSTANCES OF DETAILS, ARE REFERENCED ON PLANS. CONTRACTOR IS RESPONSIBLE TO REVIEW AND COMPLY WITH ALL APPLICABLE DETAILS WHETHER OR NOT REFERENCED ON PLANS.

•COORDINATE LOCATION OF ALL EXPOSED PIPING AND DUCTWORK WITH OWNER PRIOR TO INSTALLATION.

•IF DUCT SYSTEMS ARE USED FOR TEMPORARY HEAT, PROVIDE TEMPORARY FILTERS AT RETURN AIR OPENINGS AND INSTALL FILTERS IN THE UNITS EQUIVALENT TO THE EFFICIENCY OF THE SPECIFIED FILTERS FOR THE UNIT. IF PROPER EFFICIENCY FILTERS ARE NOT INSTALLED IN UNIT, UNIT AND ALL DUCTWORK DOWNSTREAM OF UNIT SHALL BE CLEANED BEFORE TEST AND BALANCE.

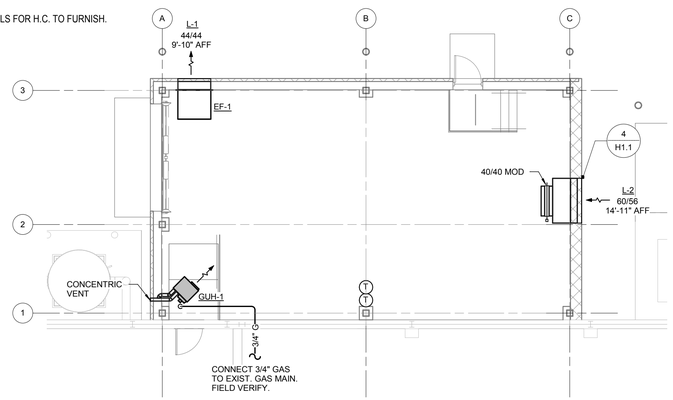

NORTH

FIRST FLOOR PLAN
SCALE: 1/8" = 1'-0"
8' 0' 8' 16'

GehlFoods
N116 W15970 Main Street
Germantown, WI
262.251.8570
IN ASSOCIATION WITH:
EXCEL
ARCHITECTS • ENGINEERS • SURVEYORS
320 CARNLOT DRIVE
FOND DU LAC, WI 54935
PHONE: (920) 924-5900
WWW.EXCELENGINEER.COM

Author: J. GORHAM
Edited By:
Date Created:
Type:

WISCONSIN RAYMOND DEL PONTE 0026356-006 FOND DU LAC, WISCONSIN PROFESSIONAL ENGINEER

Sheet Title: FIRST FLOOR PLAN
Project: 1805360
Description: AMMONIA REGRIGERATION EXPANSION
Datastream ID:
Datastream Description:

Edit Date: APRIL 3, 2018
Edit Time:
Version Author: J. GORHAM
Version Editor: J. GORHAM
Drawing No.
H1.1

LIGHTING FIXTURE SCHEDULE

DES.	DESCRIPTION	LAMP DATA NO.	LAMP DATA TYPE	VOLT	DEPTH	LIGHTING FIXTURE MFR.	LIGHTING FIXTURE CAT. NO.	SURFACE CEILING	SURFACE WALL	SURFACE SUSP.	SURFACE SPECIAL	RECESS LAY-IN	RECESS CONCEAL	RECESS DRYWALL	RECESS WALL	SEE NOTE
A	18000 LUMEN LED HIGH BAY	1	112.7W LED	MVOLT		LITHONIA	IBG 18000LM SEF AFL GND MVOLT OZ10 40K 80CRI LAOZU DWH			●						1,3
B	D SERIES SIZE 1 LED WALL PACK	1	19.1W LED	MVOLT		LITHONIA	DSXW1 LED 10C 530 40K T4M MVOLT		●							2
C	D SERIES SIZE 2 LED WALL PACK	1	73W LED	MVOLT		LITHONIA	DSXW2 LED 20C 1000 40K T4M MVOLT		●							2
D	LED EMERGENCY LIGHT	2	1.9W LED			LITHONIA	WLTU LED		●							
F	LED EXIT LIGHT	1	5W LED	MVOLT		LITHONIA	WLTE W I R EL		●							
G	D SERIES SIZE 1 LED FLOOD LIGHT	1	21W LED	MVOLT		LITHONIA	DSXF1 LED P1 40K FL MVOLT THK DDSXD				●					

LIGHTING SCHEDULE NOTES:
1. LIGHTING FIXTURE TO BE PROVIDED MOUNTING WITH A HOOK, CORD, AND PLUG FOR THE PROPER VOLTAGE.
2. PROVIDE CONTROLS, PHOTOCELL ON/PHOTOCELL OFF FOR EXTERIOR WALL PACK FIXTURES.
3. PROVIDE FIXTURES WITH 360 HIGH MOUNT MOTION SENSOR "LAOZU", PRE-WIRED TO FIXTURE.

SPECIAL OUTLET SCHEDULE -

General Drawing Symbol - 1

MARK TO	MARK UO	EQUIPMENT SERVED TYPE	LOC.	ELECTRICAL CHARACTER HP	KW	AMPS	VOLT	Ø	PWR. SOURCE PANEL	C/B	TERMINAL R	D	B	SO NOTE
	1	SE-1 ALARM					120	1	PNL-A	1	●	●	●	SO-0

ABBREVIATIONS: TO: TYPICAL OUTLET (CIRCUITING PER SUBSCRIPT ON THE DRAWINGS).
UO: UNIQUE OUTLET (CIRCUITING PER SCHEDULE ABOVE).

TERMINAL TYPE: R: DENOTES RECEPTACLE
D: DENOTES UNFUSED DISCONNECT
B: DENOTES JUNCTION BOX
PEC TO VERIFY TYPE IN EACH CASE

MOTOR WIRING SCHEDULE 6

NO.	MOTOR CHARACTERISTICS HP	VOLT	Ø	DRIVING/LOCATION	X-REF. DES.	PWR FEED SOURCE	NO	STARTER TYPE	F	I	W	LOC.	CONTROL TYPE	F	I	W	LOC.	MW NOTE
1	8KW	208	1	PWH-1		PNL-A	3,5	INTEG	EM	EM	EM	OU						
2	2@1	208	1	SE-1 POWER		PNL-A	2,4 6,8	INTEG	EM	EM	EM	OU	HOA	HC	HC	HC	OU	MW-1
3	1-1/2	460	3	EF-1		0	0	COMB	HC	0	0	101	HOA	HC	HC	HC	OU	
4	1/12	120	1	GUH-1		PNL-A	7	INTEG	EM	EM	EM	OU						MW-1

STARTER TYPE:
INTEG = INTEGRAL
COMB= COMBINATION
FURNISHED BY:
EM= EQUIPMENT MANUFACTURER
HC= HEATING CONTRACTOR
EC= ELECTRICAL CONTRACTOR

ACCESSORIES:
HOA= HAND-OFF-AUTO
PL= LED PILOT LIGHT
PB= PUSH BUTTON

DISCONNECT:
NR= NOT REQUIRED
R= REQUIRED
3R= NEMA 3R

MOTOR WIRING NOTES:
1. PROVIDE DISCONNECT FOR EQUIPMENT.

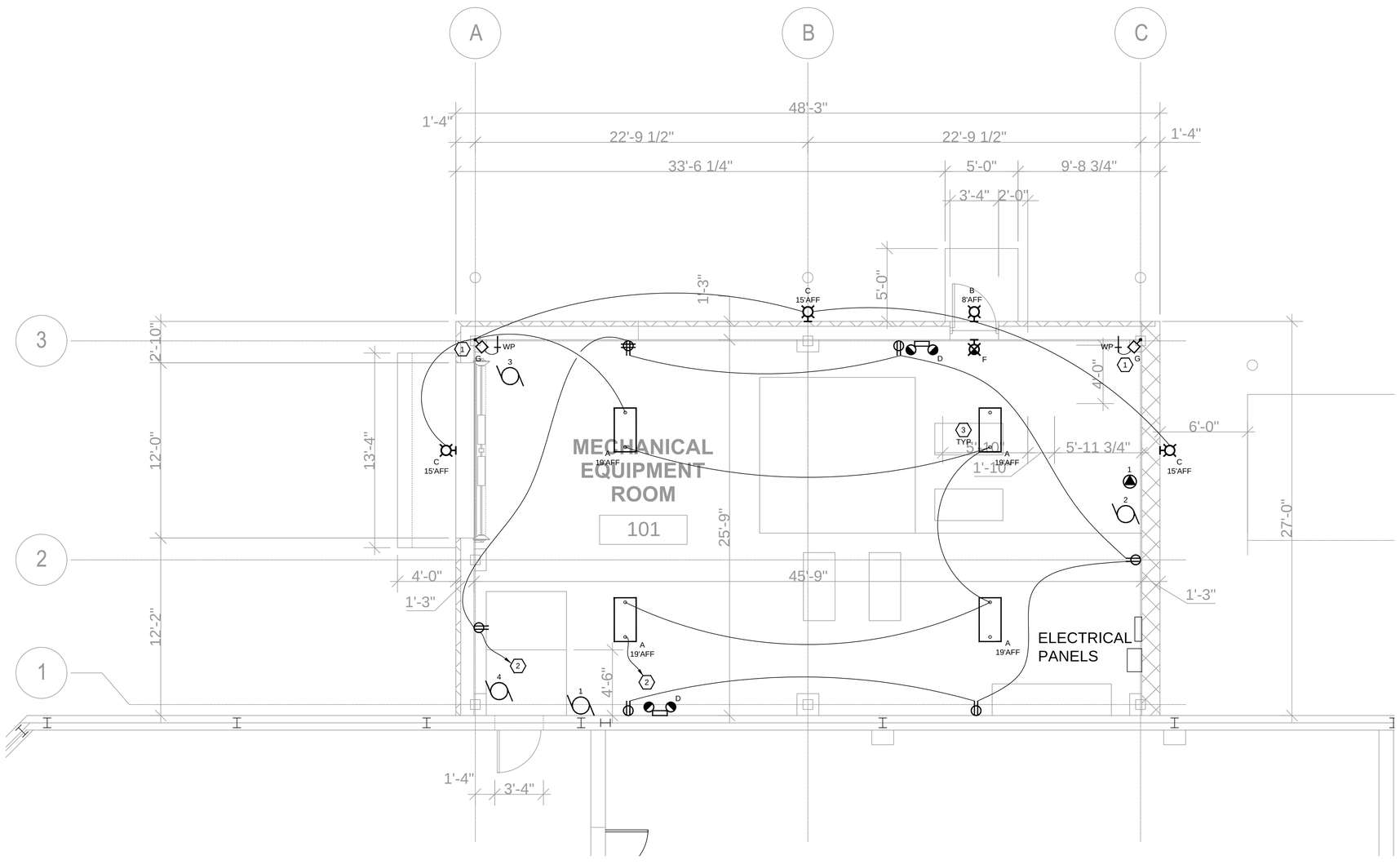

N

ELECTRICAL LIGHTING PLAN

SCALE: 1/4" = 1'-0"

GENERAL NOTES

1. CIRCUITS TO BE FIELD ASSIGNED BY THE ELECTRICAL CONTRACTOR.

SHEET NOTES

1. FLOOD LIGHT FIXTURE TO BE MOUNTED ON THE ROOF. MOUNTING STYLE KNUCKLE WITH 1/2" NPS THREADED PIPE ON TOP OF RIGID CONDUIT. LOCATE SWITCH NEAR LIGHT FIXTURE BASE. COORDINATE LOCATION AND MOUNTING WITH OWNER.
2. PROPOSED CIRCUIT. FIELD ASSIGN TO AVAILABLE PANEL AND WITH 20A, 1P CIRCUIT BREAKER.
3. BOTTOM LENS OF FIXTURE TO BE MOUNTED BELOW ALL STRUCTURAL COMPONENTS.

PANELBOARD SCHEDULE

PANEL PNL-A VOLTAGE 208Y/120V, 3Ø 4W AIC 10K

☐ FLUSH ■ MAIN 100A ■ GROUND BUS BUS 100A
■ SURFACE ☐ MLO ☐ ISOLATED GROUND BUS ☐ FEED THRU

REMARKS:

CIR #	C/B SIZE	DESCRIPTION	LOAD KVA	LOAD A Ø KVA	LOAD B Ø KVA	LOAD C Ø KVA	LOAD KVA	DESCRIPTION	C/B SIZE	CIR #
1	20	1		0				2	20	2
3	40	1			0					4
5						0		2	20	6
7	15	4		0						8
9					0					10
11						0				12
13				0						14
15					0					16
17						0				18
19				0						20
21					0					22
23						0				24
25				0						26
27					0					28
29						0				30
31				0						32
33					0					34
35						0				36
37				0						38
39					0					40
41						0				42
		TOTALS		0	0	0				
		TOTAL CONNECT, KVA		0						

GehlFoods
N116 W15970 Main Street
Germantown, WI
262.251.8570
IN ASSOCIATION WITH:
LEEDY & PETZOLD ASSOCIATES, LLC
Consulting Electrical Engineers/Planners
13570 W Bluemound Rd, Suite 101
Brookfield, WI 53005
Ph. (262) 860-1544 Fax (262) 860-1566
LPA #E994

Author: JRH
Edited By: TGS
Date Created:
Type:
Notes:

SPACE RESERVED FOR PE STAMP

Sheet Title: ELECTRICAL LIGHTING PLAN
Project: AMMONIA REFRIGERATION EXPANSION
Description: AMMONIA CONDENSER EXPANSION
Datastream ID:
Datastream Description:

Edit Date: 04/06/18
Edit Time:
Version Author: TGS
Version Editor: TGS
Drawing No.
E1.0

LIGHTING FIXTURE SCHEDULE

QTY.	DES.	DESCRIPTION	LAMP DATA NO.	LAMP DATA TYPE	VOLT	DEPTH	LIGHTING FIXTURE MFR.	LIGHTING FIXTURE CAT. NO.	SURFACE CEILING	SURFACE WALL	SURFACE SUSP.	SURFACE SPECIAL	RECESS LAY-IN	RECESS CONCEAL	RECESS DRYWALL	RECESS WALL	SEE NOTE
4	A	18000 LUMEN LED HIGH BAY	1	112.7W LED	MVOLT		LITHONIA	IBG 18000LM SEF AFL GND MVOLT CZ10 40K 80CRI LAOZU DWH			●						1,3
1	B	D SERIES SIZE 1 LED WALL PACK	1	19.1W LED	MVOLT		LITHONIA	DSXW1 LED 10C 530 40K T4M MVOLT		●							2
3	C	D SERIES SIZE 2 LED WALL PACK	1	73W LED	MVOLT		LITHONIA	DSXW2 LED 20C 1000 40K T4M MVOLT		●							2
2	D	LED EMERGENCY LIGHT	2	1.9W LED			LITHONIA	WLTU LED		●							
1	F	LED EXIT LIGHT	1	5W LED	MVOLT		LITHONIA	WLTE W I R EL		●							
1	G	D SERIES SIZE 1 LED FLOOD LIGHT	1	21W LED	MVOLT		LITHONIA	DSXF1 LED P1 40K FL MVOLT THK DDSXD				●					

LIGHTING SCHEDULE NOTES:
1. LIGHTING FIXTURE TO BE PROVIDED MOUNTING WITH A HOOK, CORD, AND PLUG FOR THE PROPER VOLTAGE.
2. PROVIDE CONTROLS, PHOTOCELL ON/PHOTOCELL OFF FOR EXTERIOR WALL PACK FIXTURES.
3. PROVIDE FIXTURES WITH 360 HIGH MOUNT MOTION SENSOR "LAOZU", PRE-WIRED TO FIXTURE.

GENERAL NOTES

1. CIRCUITS TO BE FIELD ASSIGNED BY THE ELECTRICAL CONTRACTOR.

PHOTOMETRIC STATISTICS

LOCATION	AVE	MAX	MIN	MAX/MIN	AVE/MIN
INTERIOR	37.0 fc	45.6 fc	28.2 fc	1.6:1	1.3:1
EXTERIOR*	0.8 fc	5.9 fc	0.0 fc	n/a	n/a

* PHOTOMETRIC ONLY INCLUDE LIGHTS ADDED TO THIS PROJECT. EXISTING LIGHTS INFLUENCE TOTAL FOOT CANDLE LEVELS.

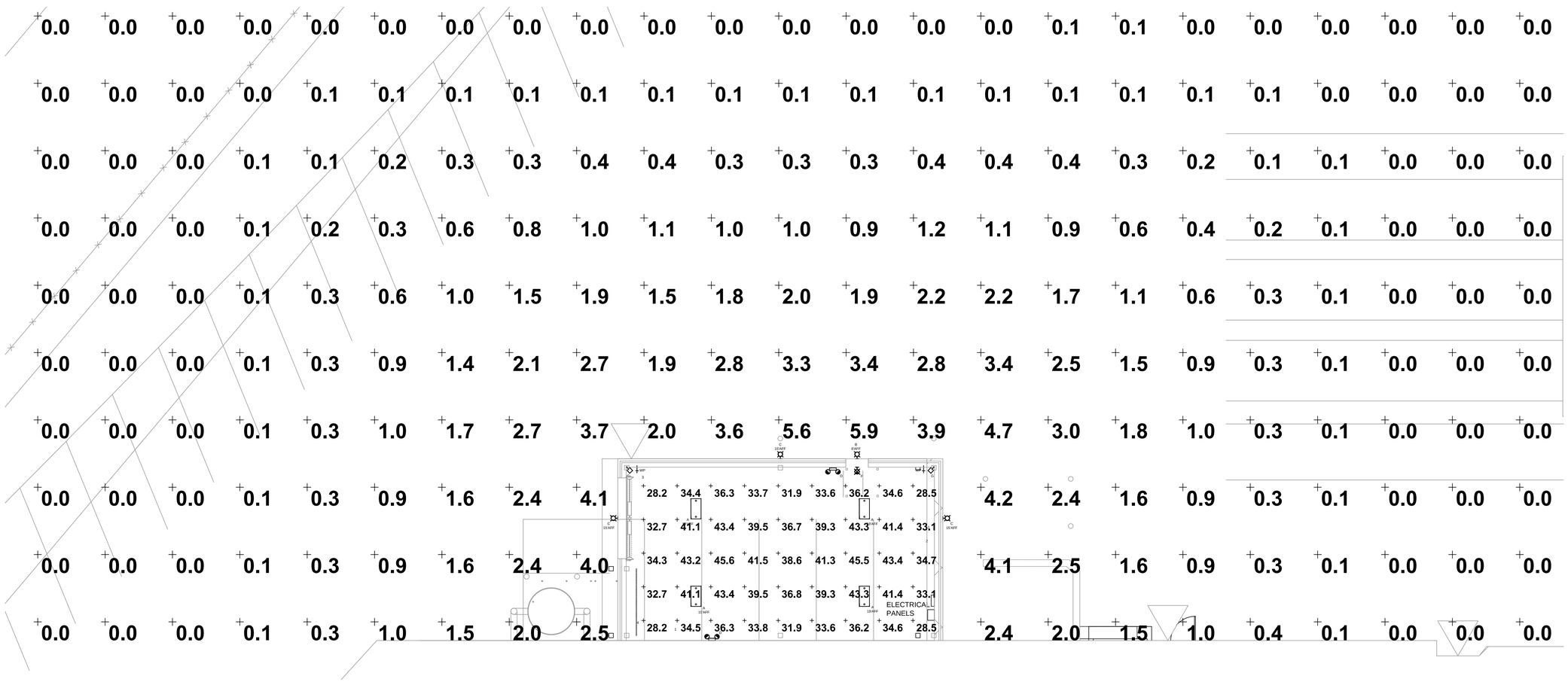

N

ELECTRICAL PHOTOMETRIC LIGHTING PLAN

SCALE: 1/8" = 1'-0"

GehlFoods
N116 W15970 Main Street
Germantown, WI
262.251.8570
IN ASSOCIATION WITH:

LEEDY & PETZOLD ASSOCIATES, LLC
Consulting Electrical Engineers/Planners
13070 W Bluemound Rd, Suite 101
New Berlin, WI 53151
Ph. (262) 860-1544 Fax (262) 860-1566
LFA #E394

Author: JRH
Edited By: TGS
Date Created:
Type:
Notes:

SPACE RESERVED FOR PE STAMP

Sheet Title: ELECTRICAL PHOTOMETRIC LIGHTING PLAN
Project: AMMONIA REFRIGERATION EXPANSION
Description: AMMONIA CONDENSER EXPANSION
Datastream ID:
Datastream Description:

Edit Date: 04/06/18
Edit Time:
Version Author: TGS
Version Editor: TGS
Drawing No.
E1.1

LITHONIA LIGHTING®

Catalog Number	
Notes	
Type	

LED High Bay

IBG

FEATURES & SPECIFICATIONS

INTENDED USE — Ideal one-for-one replacement of conventional HID and fluorescent high bay systems. Applications include warehousing, manufacturing, gymnasiums, and other large indoor spaces with mounting heights up to 60'. **Certain airborne contaminants can diminish the integrity of acrylic and/or polycarbonate.** **Click here for Acrylic-Polycarbonate Compatibility table for suitable uses.**

CONSTRUCTION — Structural elements such as the channel and end caps are fabricated from steel for maximum rigidity. Wireguard attachment points provided. For high ambient (HA) option, lightweight aluminum heat sink designed to perform in ambient temperatures up to 55 ° C for maximum naturally convective cooling.

OPTICS — General, narrow, wide and focus distributions available to meet both horizontal and vertical light level requirements. Injection molded refractors for repeatable photometry. Diffuse lens standard to provide glare control and LED protection.

ELECTRICAL — L88 at 60,000 hours, L70>100,000 hours. Utilizes a 90°C case temperature driver for maximum life at high temperatures. 0.90 power factor and 3kA/6kV level of surge protection is standard. Optional 5kA/10kV surge protection available. Available as 120-277V or 347-480V input.

0-10V dimming standard for a dimming range of 100% to 10%.

WIRELESS NETWORKING — XPoint™ Wireless technology creates a mesh network to ensure communication between fixtures, sensors and wall stations facility-wide. This option provides superior lighting management capabilities including granular control, configuration and custom grouping for increased energy savings.

INSTALLATION — Suitable for suspension by chain, cable, surface-mounting bracket (THUN accessory), hook monopoint or single (pendant) monopoint. Surface mounting not recommended without optional surface mounting bracket. To maintain ambient listing, fixture should be mounted at a minimum plenum height of 18".

LISTINGS — CSA certified to US and Canadian safety standards. Damp location listed. Suitable for ambient temperatures from -40°F (-40°C) to 113°F (45°C) when suspended 18" from ceiling. High ambient option available (HA), suitable for ambient temperatures -40°F (-40°C) to131°F (55°C) when suspended 18" from ceiling. IP5X rated. The Bluetooth® word mark and logos are registered trademarks owned by Bluetooth SIG, Inc. and any use of such marks by Acuity Brands is under license. Other trademarks and trade names are those of their respective owners.

DesignLights Consortium® (DLC) Premium qualified product and DLC qualified product. Not all versions of this product may be DLC Premium qualified or DLC qualified. Please check the DLC Qualified Products List at www.designlights.org/QPL to confirm which versions are qualified.

WARRANTY — 5-year limited warranty. Complete warranty terms located at: www.acuitybrands.com/CustomerResources/Terms_and_conditions.aspx

Note: Actual performance may differ as a result of end-user environment and application. All values are design or typical values, measured under laboratory conditions at 25 °C. Specifications subject to change without notice.

Stock configurations are offered for shorter lead times:

Standard Part Number	Stock Part Number	DLC QPL Product ID	DLC Premium?
IBG 12000LM SEF AFL GND MVOLT OZ10 40K 80CRI DWH	**IBG 12L MVOLT**	**PAMMN2VX**	√
IBG 15000LM SEF AFL GND MVOLT OZ10 40K 80CRI DWH	**IBG 15L MVOLT**	**P3G6HADN**	√
IBG 18000LM SEF AFL GND MVOLT OZ10 40K 80CRI DWH	**IBG 18L MVOLT**	**P851GVEP**	√
IBG 24000LM SEF AFL GND MVOLT OZ10 40K 80CRI DWH	**IBG 24L MVOLT**	**PZBJQY5S**	√
IBG 12000LM SEF AFL GND HVOLT OZ10 40K 80CRI DWH	**IBG 12L HVOLT**	**PQ5BU878**	√
IBG 15000LM SEF AFL GND HVOLT OZ10 40K 80CRI DWH	**IBG 15L HVOLT**	**PSWUYJP8**	√
IBG 18000LM SEF AFL GND HVOLT OZ10 40K 80CRI DWH	**IBG 18L HVOLT**	**PRVPPS9D**	√
IBG 24000LM SEF AFL GND HVOLT OZ10 40K 80CRI DWH	**IBG 24L HVOLT**	**P2UE1ZS4**	√
IBG 12000LM SEF AFL GND MVOLT OZ10 50K 80CRI DWH	**IBG 12L MVOLT 5K**	**P7TZZ4ZV**	√
IBG 15000LM SEF AFL GND MVOLT OZ10 50K 80CRI DWH	**IBG 15L MVOLT 5K**	**PMXBGZJS**	√
IBG 18000LM SEF AFL GND MVOLT OZ10 50K 80CRI DWH	**IBG 18L MVOLT 5K**	**P85EZXU7**	√
IBG 24000LM SEF AFL GND MVOLT OZ10 50K 80CRI DWH	**IBG 24L MVOLT 5K**	**PQ5CSK48**	√
IBG 12000LM SEF AFL GND HVOLT OZ10 50K 80CRI DWH	**IBG 12L HVOLT 5K**	**PFRXRQKT**	√
IBG 15000LM SEF AFL GND HVOLT OZ10 50K 80CRI DWH	**IBG 15L HVOLT 5K**	**PV4M2BP5**	√
IBG 18000LM SEF AFL GND HVOLT OZ10 50K 80CRI DWH	**IBG 18L HVOLT 5K**	**PA36YXUT**	√
IBG 24000LM SEF AFL GND HVOLT OZ10 50K 80CRI DWH	**IBG 24L HVOLT 5K**	**P5H22E5M**	√

A+ Capable Luminaire

This item is an A+ capable luminaire, which has been designed and tested to provide consistent color appearance and out-of-the-box control compatibility with simple commissioning.

- All configurations of this luminaire meet the Acuity Brands' specification for chromatic consistency
- This luminaire is part of an A+ Certified solution for nLight® or XPoint™ Wireless control networks marked by a shaded background*

To learn more about A+, visit www.acuitybrands.com/aplus.

*See ordering tree for details

A+ Capable options indicated by this color background.

ORDERING INFORMATION

Lead times will vary depending on options selected. Consult with your sales representative.

Example: IBG 24000LM SEF AFL GND MVOLT OZ10 40K 80CRI DWH

Series	Nominal lumens				Performance package		Lens		Distribution		Voltage		Driver		Color temperature	
IBG	8000LM	8,000 lumens[2]	30000LM	30,000 lumens	SEF	Standard efficiency	AFL	Acrylic, frosted	WD	Wide	MVOLT	120-277V	OZ10	0-10V dimming[2]	30K	3000 K
IBGN[1]	12000LM	12,000 lumens	36000LM	36,000 lumens	HEF	Premium efficiency	ACL	Clear acrylic	GND	General	HVOLT	347-480V[3]	AZ10	0-10V dimming, aux. output[6]	35K	3500 K
	15000LM	15,000 lumens	48000LM	48,000 lumens			PCL	Clear polycarbonate	ND	Narrow	120	120V			40K	4000 K
	18000LM	18,000 lumens	60000LM	60,000 lumens			PFL	Semi-diffuse polycarbonate	FD	Focus	208	208V			50K	5000 K
	24000LM	24,000 lumens					L/LENS	Less lens			240	240V				
											277	277V				
											347	347V[4]				
											480	480V[4,5]				

Coloring rendering index		Options						Finish	
70CRI	70 CRI	HA	High ambient[7]	Cord sets:		Controls: [21]		DNA	Natural aluminum
80CRI	80 CRI	SPD	Surge protection device[8]	CS1W	Straight plug, 120V[17]	HLN360	Haleon 360° High Mount Occ Sensor, pre-wired; Bluetooth® [20]	DWH	Gloss white
90CRI	90 CRI	BPK	Fixture backpack[9]	CS3W	Twist-lock, 120V[17]	HLN360HL	Haleon 360° High Mount Occ Sensor w/HL Default, pre-wired; Bluetooth® [20]		
		PS1050	Emergency battery pack 10W, non-CEC compliant [10]	CS7W	Straight plug, 277V[17]	HLN360ADC	Haleon 360° High Mount Occ Sensor w/ADC Default, pre-wired; Bluetooth® [20]		
		PS10250	Emergency battery pack 10W, non-CEC compliant [11]	CS11W	Twist-lock, 277V[17]	HLN360ANL	Haleon 360° High Mount Occ Sensor w/ANL Default, pre-wired; Bluetooth® [20]		
		PS10250 T20C	Emergency battery pack, 10W, CEC compliant [11]	CS25W	Twist-lock, 347V[17]	HLNASL	Haleon High Mount Aisleway Occ Sensor, pre-wired; Bluetooth® [20]		
		PS30250	Emergency battery pack, 30W, non-CEC compliant [12]	CS97W	Twist-lock, 480V[17]	HLNASLHL	Haleon High Mount Aisleway Occ Sensor w/HL Default, pre-wired; Bluetooth® [20]		
		PS30250 T20C	Emergency battery pack, 30W, CEC compliant [12]	CS93W	600 SO white cord, no plug (no voltage required)	HLNASLADC	Haleon High Mount Aisleway Occ Sensor w/ADC Default, pre-wired; Bluetooth® [20]		
		BGTD	Generator transfer device[13]	CS93W5CD	600 SO 5-conductor white cord, no plug (no voltage required)	HLNASLANL	Haleon High Mount Aisleway Occ Sensor w/ANL Default, pre-wired; Bluetooth® [20]		
		SF	Single fuse[14]			LAOZU	360° high mount motion sensor, pre-wired [22]		
		DF	Double fuse[15]			LAHOSZU	360° high mount motion sensor with dimming, pre-wired [22]		
		OUTCTR	Wiring leads pulled through back center of fixture[16]			LAPZU	360° high mount motion sensor with photocell, pre-wired [22]		
		OCS	RELOC® OnePass® selectable cable 6' installed [17, 18]			LAMOSZU	360° high mount motion sensor, dimming & switching photocell, pre-wired [22]		
		OCU___	RELOC® OnePass® unselectable cable 6' installed (must specify tap position)[17]			C6DOSUEM	360° high mount motion sensor, dimming only (photocell disabled), pre-wired; UL924 listed (not available with battery pack or BGTD) [23,24]		
		IMP	Integrated modular plug [19]			C10DOSUEM	360° low mount motion sensor, dimming only (photocell disabled), pre-wired; UL924 listed (not available with battery pack or BGTD) [23,25]		
		RRL_	RELOC®-Ready luminaire. (Not available with Haleon sensor options) See page 10 for ordering information			nPP16D	nLight® dimming & switching module [26,27]		
		WGX	Standard wire guard, installed (not available with Haleon sensor)			nPP16DER	nLight® dimming & switching module with emergency relay (not available with battery pack or BGTD) [26,27]		
						nMSI	nLight® high mount aisleway motion sensor, pre-wired [26,28]		
						nMSI360	nLight® 360° high mount motion sensor, pre-wired [26,29]		
						nMSID	nLight® high mount aisleway motion sensor with dimming, pre-wired [26,30]		
						nMSI360D	nLight® 360° high mount motion sensor with dimming, pre-wired [26,31]		
						MSI6XADL DSCXADL	XPoint™ Wireless 360° high mount motion sensor with photocell		
						XPW	XPoint™ Wireless 0-10V relay, external (utilizes XPA CMRB0) 55°C max ambient		
						XAD	XPoint™ Wireless 0-10V relay, internal, lower max ambient (not available with Haleon sensor) [32]		
						XPWEM	XPoint™ Wireless 0-10V relay, external (utilizes XPACMRB0EM) 55°C max ambient, meets UL924 (not available with battery pack or BGTD)		
						XAD924	XPoint™ Wireless 0-10V relay, internal, lower max ambient, meets UL924 (not available with battery pack or BGTD) [33]		

See Accessories and footnotes on next page

© 2016-2017 Acuity Brands Lighting, Inc. All rights reserved.

Accessories: *Order as separate catalog number.*

Mounting:

IBAC120 M20	Aircraft cable 10' with hook (one pair)
IBAC240 M20	Aircraft cable 20' with hook (one pair)
IBHMP	Hook monopoint
HBBS36	Chain hanger with chain, 36" (one pair)
IBGACVH	Aircraft 10' V hanger (one pair)
IBGPMPHB	Pendant monopoint splice box, includes side covers (3/4" hub) for use with OUTCTR option, not available with BPK option
HC36	Chain hanger and jack chain (pair)
THUN	Tong hanger bracket (order 2 per fixture) [33]

Cord sets and sensors for IMP option:

CS1WIMP	Straight plug, 120V
CS3WIMP	Twist-lock, 120V
CS7WIMP	Straight plug, 277V
CS11WIMP	Twist-lock, 277V
CS25WIMP	Twist-lock 347V
CS93WIMP	600V SO white cord, no plug (no voltage required)
CS97WIMP	Twist-lock 480V
MSIIMPIBG	Aisle sensor for use with IMP option
MSI360IMPIBG	360° sensor for use with IMP option

Wire guards (not available with Haleon sensor):

WGIBG22	Wire guard for IBG 8000LM; gloss white
WGIBG24	Wire guard for IBG 12000/15000LM; gloss white
WGIBG26	Wire guard for IBG 18000/24000/30000LM; gloss white
WGIBG42	Wire guard for all IBGN lumen packages; gloss white
WGIBG46	Wire guard for IBG 36000/48000/60000LM; gloss white
WGIBG22DNA	Wire guard for IBG 8000LM; natural aluminum
WGIBG24DNA	Wire guard for IBG 12000/15000LM; natural aluminum
WGIBG26DNA	Wire guard for IBG 18000/24000/30000LM; natural aluminum
WGIBG42DNA	Wire guard for all IBGN lumen packages; natural aluminum
WGIBG46DNA	Wire guard for IBG 36000/48000/60000LM; natural aluminum

Notes

1 Available with 18000LM, 24000LM, 30000LM and 36000LM only.
2 Not available with Haleon sensor controls options.
3 Not available with 8000LM. Not available with BTGD, nPP16D, nPP16DER, PS1050, PS10250, PS30250 or XAD.
4 When ordered with 8000LM voltage selected utilizes the fixture back pack.
5 Not available with nPP16D or nPP16DER.
6 Only available with Haleon sensor controls options.
7 55 C when suspended, 45 C when surface mounted. Not available with BGTD, PS1050, PS10250, PS30250, XAD.
8 Standard with HVOLT, 347, or 480V - only specify for MVOLT, 120, 208, 240, or 277V. Standard with Motion sensors/controls, BGTD & Power Sentry battery options.
9 Required with PS1050, PS10250, PS30250, BGTD. Required with 8000LM when ordered with 347/480V. Required with Xpoint controls when order with 347/480V. Not available with nLight. Not for use with THUN mount (surface).
10 Requires BPK option. Available 120-277V only. Available with 8000LM only. For ambient temperatures of 32°F to 122°F (0°C to 50°C). Not available with IMP. See spec sheet PS1050 for more information.
11 Requires BPK option. Available 120-277V only. Not available with 8000LM. For ambient temperatures of 50°F to 122°F (10°C to 50°C).Not available with IMP. Only available for factory installation. See spec sheet PS10250 for more information.
12 Requires BPK option. 120 or 277V only. Not available with 8000LM. For ambient temperatures of 32°F to 122°F (0°C to 50°C). Not available with IMP. See spec sheet PS30250 for more information.
13 Requires BPK option. 120 or 277V only. Not available with PS1050, PS10250, PS30250 or HA. Not available with 347 or 480V when ordered in combination with XAD or XPW. For ambient temperatures up to 104°F (40°C).
14 Available on 120, 277, 347V. Not available with MVOLT or HVOLT.
15 Available on 208, 240, 480V. Not available with MVOLT or HVOLT.
16 Not available with BPK option. Requires IBGPMPHB accessory to mount fixture. Not available with Cord Set options.
17 Must specify voltage.
18 Cannot be used in dimming applications, must use RRLC12S
19 Not available with BPK, nPP16D, nPP16DER, nMSI, nMSI360, PS1050, PS10250, or PS30250.
20 If 347V or 480V BPK option required. RRL option not available.
21 Must specify voltage. Refer to page 7 for Haleon sensor default settings matrix. Refer to page 9 for additional LSXR ordering options. Refer to page 10 for additional C6D0SUEM and C10D0SUEM information.
22 This sensor configuration is suitable for minimum ambient temperature of 14°F (-10°C). See page 9 for low temperature option providing -4°F (-20°C) minimum ambient temperature.
23 Daylight harvesting functionality not enabled by default. See page 10 for default sequence of operation.
24 Utilizes XPA CMRB6.
25 Utilizes XPA CMRB10.
26 Not available with 208V, 240V, or 480V.
27 347V and 480V utilize a step down transformer.
28 nMSI options utilizes a nPP16 and nCMB 50 sensor, CAT5e connector cable also included.
29 nMSI360 options utilizes a nPP16 and nCMB 6 sensor, CAT5e connector cable also included.
30 nMSID options utilizes a nPP16D and nCMB 50 sensor CAT5e connector cable also included.
31 nMSI360D options utilizes a nPP16D and nCMB 6 sensor, CAT5e connector cable also included.
32 Not available with HVOLT. When ordered with 347V or 480V, BPK option is required. Not available with HA option.
33 Maximum ambient temperature of standard fixture mounted with THUN is 95°F (35°C). With HA option 113°F (45°C). Not available with MSIIMPIBG or MSI360IMPIBG options.

POWER SENTRY EMERGENCY BATTERY PACKS

PS1050:	http://www.acuitybrands.com/products/detail/369448/Power-Sentry/PS1050/Reduced-Profile-LED-Emergency-Battery-Pack/-/media/products/Power_Sentry/369448/document/PS1050_pdf.pdf
PS10250:	http://www.acuitybrands.com/products/detail/604737/Power-Sentry/PS10250/Emergency-LED-Battery-Backup/-/media/products/Power_Sentry/604737/document/PS10250_pdf.pdf
PS30250:	http://www.acuitybrands.com/products/detail/604739/Power-Sentry/PS30250/Emergency-LED-Battery-Backup/-/media/products/Power_Sentry/604739/document/PS30250_pdf.pdf

EMERGENCY LUMENS (5000K 70CRI)

Fixture	IBG			IBGN
Lumen package	8000LM (PS1050 only)	12000LM - 15000LM	18000LM - 60000LM	18000LM - 36000LM
PS1050/PS10250	1600	1300	1900	1200
PS30250	N/A	4000	2400	3800

Note: For emergency lumen output of specific model, please consult factory.

© 2016-2017 Acuity Brands Lighting, Inc. All rights reserved.

DIMENSIONS

All dimensions are in inches (centimeters) unless otherwise indicated.
Dimensions may vary with options or accessories.

Weight: (may vary with options or accessories)
8L: 7.75 lbs (3.515Kg)
12L/15L: 10.5 lbs (4.762Kg)
18L/24L/30L: 15.9 lbs (7.212Kg)
18L/24L/30L/36L: 4' Narrow - 16.25 lbs (7.370Kg)
36L/48L/60L: 4' - 6' Mod - 21.75 lbs (9.865Kg)

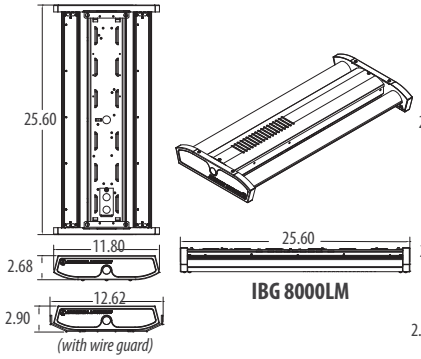

IBG 8000LM

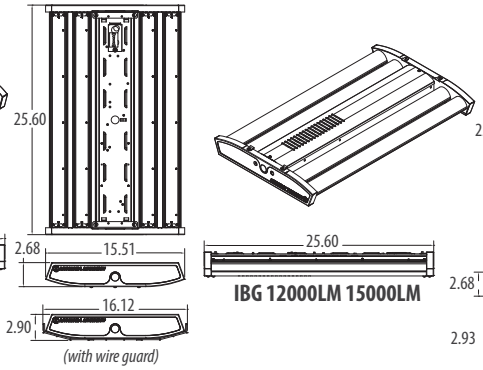

IBG 12000LM 15000LM

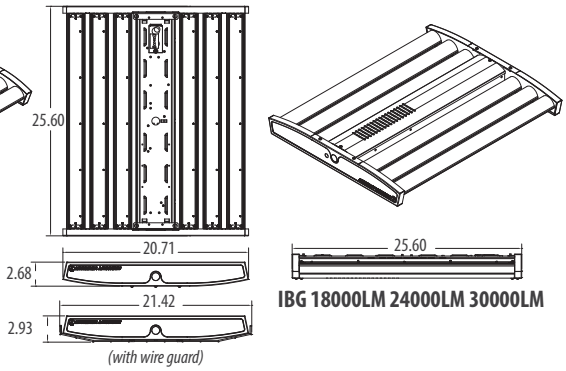

IBG 18000LM 24000LM 30000LM

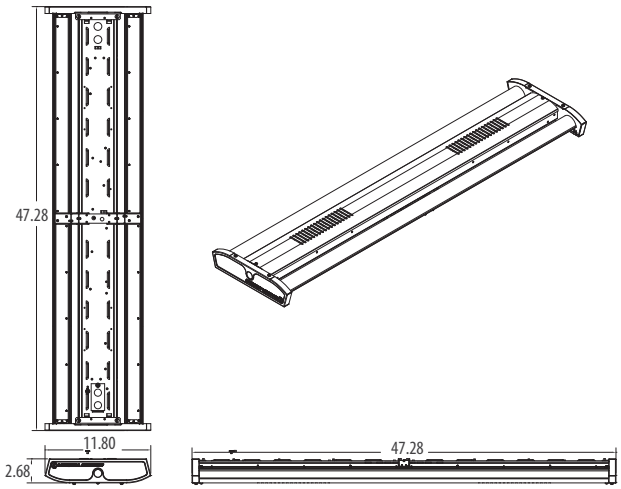

IBGN 18000LM

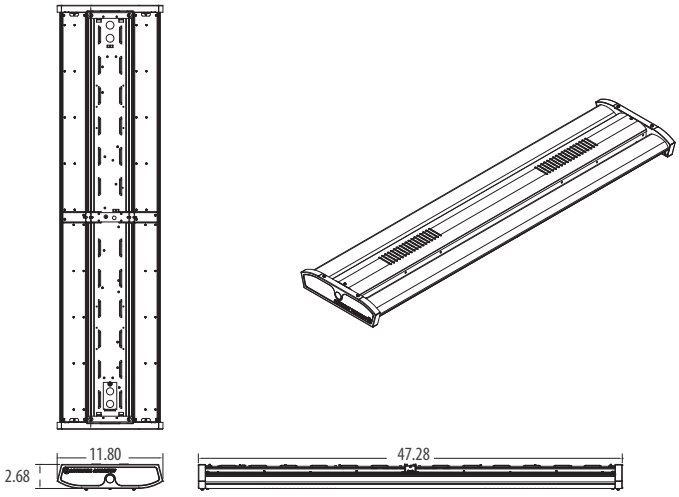

IBGN 24000LM 30000LM 36000LM

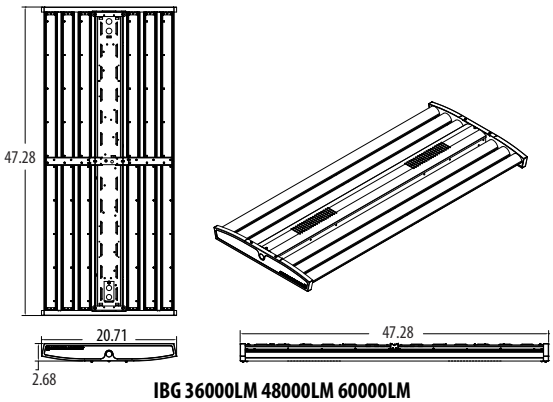

IBG 36000LM 48000LM 60000LM

BPK OPTION

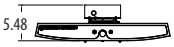

PS30250 OPTION

© 2016-2017 Acuity Brands Lighting, Inc. All rights reserved.

IBG OPERATIONAL DATA

	Lumen package	Efficiency level	Lens/distribution			
			Acrylic frosted/ general	Clear acrylic/narrow	Clear acrylic/wide	Clear acrylic/focus
Delivered lumens 4000K, 80CRI	8000LM	SEF	7594	7145	7384	7364
		HEF	7842	7378	7625	7604
	12000LM	SEF	11580	10895	11260	11228
		HEF	11746	11051	11421	11390
	15000LM	SEF	14458	13603	14059	14019
		HEF	14824	13947	14415	14374
	18000LM	SEF	17329	16303	16850	16803
		HEF	17752	16702	17262	17214
	24000LM	SEF	23000	21639	22365	22303
		HEF	23612	22215	22960	22896
	30000LM	SEF	27344	25727	26589	26515
		HEF	29577	27827	28760	28680
	36000LM	SEF	33203	31239	34547	32197
		HEF	35528	33426	34547	34450
	48000LM	SEF	45973	43253	44704	44579
		HEF	47254	44458	45949	45821
	60000LM	SEF	55453	52172	53922	53771
		HEF	57027	53653	55452	55298
Delivered lumens 5000K, 80CRI	8000LM	SEF	7873	7408	7656	7635
		HEF	8082	7604	7859	7837
	12000LM	SEF	12006	11296	11674	11642
		HEF	12106	11390	11771	11739
	15000LM	SEF	14990	14103	14576	14536
		HEF	15278	14374	14856	14815
	18000LM	SEF	17966	16904	17470	17422
		HEF	18296	17214	17791	17741
	24000LM	SEF	23847	22436	23188	23123
		HEF	24366	22896	23664	23598
	30000LM	SEF	28351	26674	27568	27491
		HEF	30483	28680	29641	29559
	36000LM	SEF	34221	32196	35605	33183
		HEF	36616	34450	35605	35506
	48000LM	SEF	47665	44845	46349	46220
		HEF	48702	45820	47357	47225
	60000LM	SEF	57494	54093	55906	55751
		HEF	58774	55297	57151	56992

PHOTOMETRICS

See www.lithonia.com.

© 2016-2017 Acuity Brands Lighting, Inc. All rights reserved.

IBG CHARACTERISTICS

Lumen package	Wattage								Length	Width	Depth	Comparable Light Source
	Standard efficiency				High efficiency							
	120V	277V	347V	480V	120V	277V	347V	480V	Dimensions are shown in inches (centimeters) unless otherwise noted.			
8000LM	55	54	58	61	50	49	51	54	25.6	11.75	2.75	100W MH, 4-lamp T8 NBF
12000LM	79	77	77	76	70	69	68	67	25.6	15.52	2.75	175W MH, 4-lamp T8 HBF, 2-lamp T5HO
15000LM	97	95	97	96	87	86	86	86	25.6	15.52	2.75	200W MH, 6-lamp T8 NBF
18000LM	114	112	114	115	102	100	102	103	25.6	20.65	2.75	250W MH, 6-lamp T8 HBF, 4-lamp T5HO
24000LM	154	150	150	150	136	133	135	135	25.6	20.65	2.75	400W MH, 6-lamp T5HO
30000LM	193	186	188	188	176	171	173	173	25.6	20.65	2.75	575W MH, 10-lamp T8 HBF
36000LM	225	221	227	229	200	197	203	206	47.29	20.65	2.75	750W MH, 8-lamp T5HO
48000LM	301	293	301	302	267	261	269	270	47.29	20.65	2.75	875W MH, 10-lamp T5HO
60000LM	385	374	378	377	332	323	330	330	47.29	20.65	2.75	1000W MH

IBGN OPERATIONAL DATA

	Lumen package	Efficiency level	Lens/distribution			
			Acrylic frosted/ general	Clear acrylic/narrow	Clear acrylic/wide	Clear acrylic/focus
Delivered lumens 4000K, 80CRI	18000LM	SEF	17036	16028	16566	16520
		HEF	17776	16724	17285	17237
	24000LM	SEF	22727	21383	22100	22038
		HEF	24123	22696	23457	23392
	30000LM	SEF	28642	26948	27851	27773
		HEF	29493	27748	28679	28599
	36000LM	SEF	34336	32305	33388	33295
		HEF	34912	32846	33948	33853
Delivered lumens 5000K, 80CRI	18000LM	SEF	17663	16618	17175	17128
		HEF	18320	17237	17814	17765
	24000LM	SEF	23564	22170	22913	22849
		HEF	24862	23391	24176	24108
	30000LM	SEF	29696	27940	28876	28796
		HEF	30397	28599	29558	29475
	36000LM	SEF	35600	33494	34617	34520
		HEF	35982	33853	34988	34890

IBGN CHARACTERISTICS

Lumen package	Wattage								Length	Width	Depth
	Standard efficiency				High efficiency						
	120V	277V	347V	480V	120V	277V	347V	480V	Dimensions are shown in inches (centimeters) unless otherwise noted.		
18000LM	117	114	115	114	104	102	101	101	47.29	11.75	2.75
24000LM	172	170	167	167	152	150	153	153	47.29	11.75	2.75
30000LM	209	205	208	207	183	180	179	178	47.29	11.75	2.75
36000LM	246	240	242	243	207	203	202	201	47.29	11.75	2.75

© 2016-2017 Acuity Brands Lighting, Inc. All rights reserved.

PROJECTED LUMEN MAINTENANCE

IBG 2ft & 4ft						
Operating hours	0	15,000	30,000	45,000	60,000	100,000
Lumen maintenance factor	1	0.97	0.95	0.93	0.91	0.86
IBGN						
Operating hours	0	15,000	30,000	45,000	60,000	100,000
Lumen maintenance factor	1	0.97	0.93	0.90	0.87	0.81

AMBIENT TEMPERATURE RATINGS

Mounting	Suspended	Surface
Standard temperature rating	113°F (45°C)	95°F (35°C)
HA option temperature rating	131°F (55°C)	113°F (45°C)

LUMENS VS. AMBIENT TEMPERATURE

Ambient °C	Ambient °F	Lumen Multiplier
0	32	1.04
5	41	1.03
10	50	1.02
20	68	1.01
25	77	1.00
30	86	0.99
35	95	0.99
40	104	0.98
45	113	0.97
50	122	0.96
55	131	0.96

HALEON - Integrated Occupancy Sensor with Bluetooth® Programmability

- Programmable sensor settings over Bluetooth® with Acuity VLP smartphone app.
- Default programming options to service various application spaces - occupancy detection, 0-10V dimming and daylight harvesting.
- 360° High Mount and High Mount Aiselway lens detection options for mounting heights up to 40 ft.
- Integrated retractable lens mask included to block unwanted detection.
- Sensor ambient temperature rating of -40°F (-40°C) to 158°F (70°C).

Bluetooth®

Haleon Default Programming

Model	Default Operation	LSXR Equivalent	Occupancy Time Delay	Photocell Mode	Photocell Set-point	Low Trim	High Trim	Dim to Off Time Delay
HLNxxx	On/Off Occupancy Only	LSXR 6 LT or LA00STU	10 minutes	Disabled	n/a	n/a	100%	Disabled
HLNxxxHL	Occupancy w/ 0-10V Dimming (High/Low/Off)	LSXR 6 HL LT or LAH0STU	10 minutes	Disabled	n/a	10%	100%	2.5 minutes
HLNxxxADC	Occupancy w/ Dim & Switch Photocell	LSXR 6 ADC LT or LAM0STU	10 minutes	On/Off & Auto Dim	4 fc	10%	100%	0 seconds
HLNxxxANL	Dim & Switch Photocell with High/Low Occupancy Operation	LSXR 6 ANL LT or LAG0STU	10 minutes	On/Off & Auto Dim	4 fc	10%	100%	Stay Dim/ Never Off

Note: Lens detection noted in place of 'xxx'

© 2016-2017 Acuity Brands Lighting, Inc. All rights reserved.

HALEON COVERAGE PATTERNS

HIGH MOUNT 360°

- Optimized full coverage pattern for 10 – 40 ft. (3.1 – 12 m)
- Reliable detection of large motion (e.g. pedestrian walking traffic) up to 30 ft. (9.1 m) mounting height
- Reliable detection of extra-large motion (e.g. forklift traffic) up to 40 ft. (12 m) mounting height
- Stow-able rotating lens shield can be utilized to mask areas in which detection is not desired

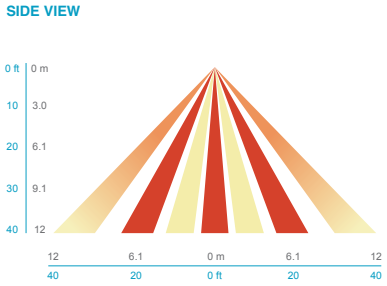

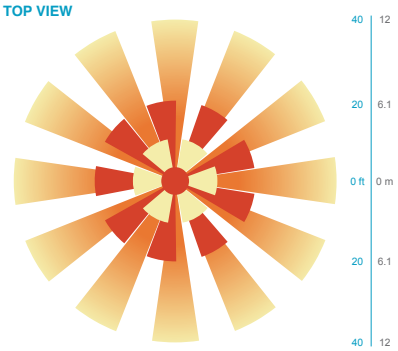

HIGH MOUNT AISLEWAY

- Optimized bi directional coverage pattern for aisleways with 10 – 40 ft. (3.1 – 12 m) mounting heights
- 1.2X's mounting height equals approximate detection range
- Reliable detection of large motion (e.g. pedestrian walking traffic) up to 30 ft. (9.1 m) mounting height
- Reliable detection of extra-large motion (e.g. forklift traffic) up to 40 ft. (12 m) mounting height
- Stow-able rotating lens shield can be utilized to mask areas in which detection is not desired

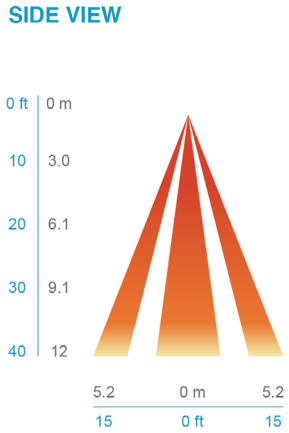

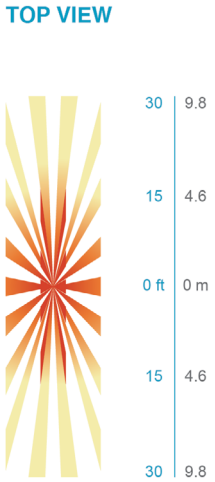

© 2016-2017 Acuity Brands Lighting, Inc. All rights reserved.

LSXR – Fixture Mount Occupancy Sensor (see www.AcuityControls.com for additional information)

- Three interchangeable lens options to satisfy multiple mounting heights and coverage pattern requirements.
- Integrated mounting bracket drops lens down 3" from chase nipple.
- Single or dual relay versions — designed with robust protection from the harsh switching requirements of T5 and LED loads.
- Photocell and 0-10VDC dimming options.
- No PIR field calibration or sensitivity adjustments required.
- Sensor ambient temperature rating of 14°F (-10°C) to 131°F (55°C).

LSXR configuration	Comparable CMRB sensor	Old style sensor nomenclature
For shortest lead times use one of the following LSXR configurations		
LC0ZU	CMRB 50	MSI
LCH0SZU	CMRB 50 D	MSID
LCPZU	CMRB 50 P	MSIPED
LA0ZU	CMRB 6	MSI360
LAH0SZU	CMRB 6 D	MSI360D
LAPZU	CMRB 6 P	MSI360PED

SELECTIONS BELOW WILL EXTEND ORDER LEAD TIME. CONSULT YOUR SALES REPRESENTATIVE FOR DETAILS.

SINGLE RELAY

ORDERING INFORMATION

Example: LAH0SZU

Series	Lens option	Dimming/Photocell	Max. dim level	Min. dim level	Temp/Humidity	Default occupancy time delay
L LSXR passive infrared indoor occupancy sensor	A High mount, 360° B Low mount, 360° C High mount aisleway	0 None[1] H High/low occupancy operation P Switching photocell (on/off)[1] M Dimming and switching photocell G Dimming and switching photocell with high/low occupancy operation	0 10 VDC 9 9 VDC 8 8 VDC 7 7 VDC	S Minimum dim level of ballast 1 1 VDC 2 2 VDC 3 3 VDC 4 4 VDC 5 5 VDC 6 6 VDC	Z None T Low temperature[2]	I 30 sec D 2.5 min X 5.0 min R 7.5 min U 10.0 min (with minimum 15 minute on time) V 15.0 min W 20.0 min Y 30.0 min

Notes

1 Max and min dim levels not applicable with this option.

2 Ambient temperature rating of -4°F (-20°C) to 131°F (55°C).

DUAL RELAY (Available with 120, 277, and 347V only)

ORDERING INFORMATION

Example: LA2KZU

Series	Lens option	Poles	Operating mode	Temp/Humidity	Default occupancy time delay
L LSXR passive infrared indoor occupancy sensor	A High mount, 360° B Low mount, 360° C High mount aisleway	2 Dual relay	J None K Alternating off relays (promotes even lamp wear) O Alternating off relays w/photocell P Switching photocell(on/off) E Photocell on/off (pole 1 only) F Photocell on/off - both poles (dual set-point)	Z None T Low temperature[1]	I 30 sec D 2.5 min X 5.0 min R 7.5 min U 10.0 min (with minimum 15 minute on time) V 15.0 min W 20.0 min Y 30.0 min

Notes

1 Ambient temperature rating of -4°F (-20°C) to 131°F (55°C).

Example: LENS 50 J100

Replacement lenses: *Order as separate catalog number.*

Series	Lens type	Package quantity
LENS	6 High mount 360° 10 Low mount 360° 50 High mount aisleway	[blank] Single Lens J10 10-pack J100 100-pack

© 2016-2017 Acuity Brands Lighting, Inc. All rights reserved.

LSXR COVERAGE PATTERNS

HIGH MOUNT 360º LENS (#6)

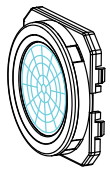

- Best choice for 15 to 45 ft (4.57 to 13.72 m) mounting heights
- 15 to 20 ft (4.57 to 6.10 m) radial coverage overlaps area lit by a typical high bay fixture
- Excellent detection of large motion (e.g. walking) up to a 35 ft (10.76 m) mounting height
- Excellent detection of extra large motion (e.g. forklifts) up to a 45 ft (13.72 m) mounting height

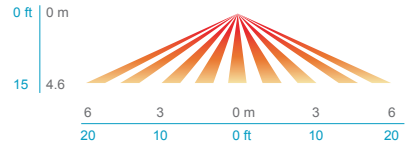

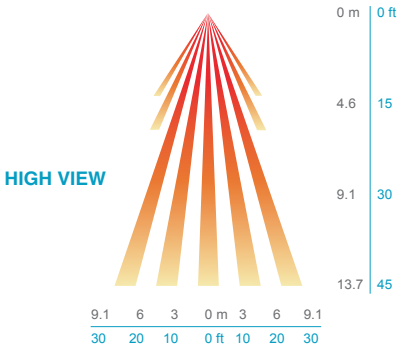

HIGH MOUNT AISLEWAY LENS (#50)

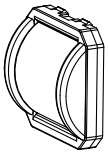

- Provides a bi-directional coverage pattern ideal for warehouse racking
- 1.2x mounting height equals approximate detection range in either direction
- Typical 40 ft (12.19 m) mounting detects 50 ft (15.24 m) in either direction
- Superior aisleway coverage compared to a masked 360º lens

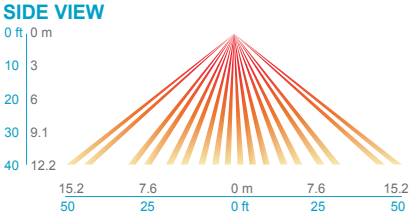

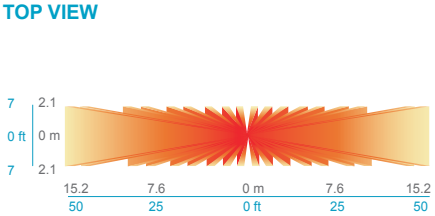

LOW MOUNT 360º LENS (#10)

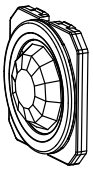

- Best choice for large motion detection (e.g. walking)
- 360º conical shaped pattern
- Provides ~24 ft (7.32 m) radial coverage (~2000 ft2) when mounted at 9 ft (2.74 m)
- 7 to 15 ft (2.13 to 4.57 m) mounting heights provide 16 to 36 ft (4.88 to 10.97 m) radial coverage
- Detection range improves when walking across beams compared to into beams

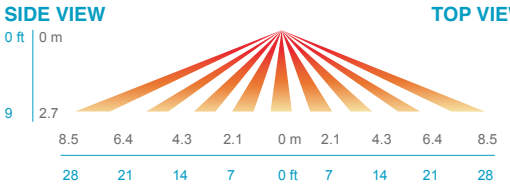

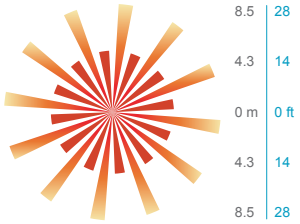

C6D0SUEM & C10D0SUEM - UL924 Listed Sensors

SENSOR DEFAULT SEQUENCE OF OPERATION

- The occupied light level is full output.
- The unoccupied light level is approximately 30%.
- The time delay following sensor vacancy is 5 minutes, with an additional 5 minute slow ramp from the occupied light level to the unoccupied light level.
- **The onboard daylight sensor is not enabled by default - sensor will not respond to changing daylight conditions.**

Daylight sensor settings can be enabled and programmed by a trained technician after installation.

EGRESS MODE SEQUENCE OF OPERATION

The UL924 C6D0SUEM & C10D0SUEM controls are designed to provide fully tuned light output for 90 minutes following power loss or interruption, ignoring automatic dimming/occupancy/daylight control signals during this time.

- Typical sequence upon power loss: Backup power source activates, transfer switch moves the emergency circuit powering the sensor onto the backup source, and sensor regains power. This sensor is programmed to detect any power interruption or transfer > 30 ms
- The sensor then ignores occupancy & daylight status and controls the luminaire to full light output for 90 minutes.
- The device resumes normal dimming & occupancy controls after 90 minutes.
- This sensor should not be used with online power backup systems or any transfer devices with < 30 ms transfer time.

© 2016-2017 Acuity Brands Lighting, Inc. All rights reserved.

IMP - Integrated Modular Plug

- The integrated modular plug (IMP) option allows the installer to plug and play a multitude of accessories.
- Cord sets connect quickly to any fixture with IMP option.
- IMP accessories include occupancy sensors, photocells, X-point relays.

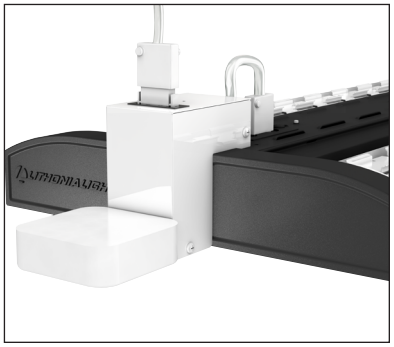

IMP compatible cord sets[1]	
CS1WIMP	Straight plug, 120V
CS3WIMP	Twist-lock, 120V
CS7WIMP	Straight plug, 277V
CS11WIMP	Twist-lock, 277V
CS25WIMP	Twist-lock, 347V
CS93WIMP	600V SEOOW white cord, no plug
CS97WIMP	Twist-lock, 480V

IMP compatible sensors	
MSIIMP	Aisle sensor
MSI360IMP	360° sensor

Notes

1 Cord set required for fixture operation. All cord sets are 18/3, 6' white.

RRL - RELOC®-Ready Luminaire

- RRL connectors can be used with Quick-Flex®, System 820 and OnePass® systems.
- Load side of connector factory installed to luminaire.
- 4-pole mating connector with push-in terminations allows for simple installation.
- Touch-safe design on both halves meets UL/CSA requirement.
- Wiping contact design allows safe disconnect under load.

ORDERING INFORMATION Lead times will vary depending on options selected. Consult with your sales representative.

Example: RRLA

Series		Wiring instructions			
RRL	RELOC®-ready luminaire	A	Hot conductor wired to position #1 (phase A); non-dimming	AE	Hot conductor wired to position #1 (phase A), hot conductor #2 wired to position #2 (phase B); non-dimming [2]
		B	Hot conductor wired to position #2 (phase B); non-dimming	ABE	Hot conductor wired to position #1 (phase A), hot conductor #2 wired to position #2 (phase B), inverter conductor wired to position #3 (phase C); non-dimming [1,2]
		C	Hot conductor wired to position #3 (phase C); non-dimming [1]	C12S	Hot conductor in position #1 (phase A), low voltage conductor #1 in position #2,low voltage conductor #2 in position #3; dimming [1,3]
		AB	Outboard hot conductor wired to position #1 (phase A), inboard hot conductor wired to position #2 (phase B); non-dimming		

Compatible RELOC® Cables for Industrial Luminaires (ordered and shipped separately)

(click to view RELOC product page for more information)

OCS

OCU

OD

DC

PT

Notes

1 C, ABE, and C12S options are not used with Quick-Flex QFC, QSFC, QPT, and QD.

2 AE and ABE commercial fixtures should disconnect the TSPL before unplugging the RRL so it does not go into discharge mode.

3 C12S option is used with the OnePass OD and 820 SSC, PT, and DC for 0-10V/DALI applications.

© 2016-2017 Acuity Brands Lighting, Inc. All rights reserved.

LITHONIA LIGHTING®

Catalog Number	
Notes	
Type	

FEATURES & SPECIFICATIONS

INTENDED USE — Ideal for wet location areas requiring exit signs for AC only or battery back-up power that are subject to saturation with non-mechanically delivered water.

CONSTRUCTION — White, compact, contemporary design. Engineering-grade thermoplastic housing is impact-resistant, scratch-resistant and corrosion-proof. Universal directional Chevron inserts are easily removed and reinserted. UL94V-0 flame rating. UV-stable resin resists discoloration from natural and man-made light sources. Rugged, heavy-duty, polycarbonate clear housing lens. Housing also available in black or gray. Letters 6" high with 3/4" stroke, with 100 ft. viewing distance rating, based upon UL924 standards.

OPTICS — Low energy consumption — fewer than 5 watts. The typical life of the exit LED lamp is 10 years, based on continuous operation.

ELECTRICAL — Dual voltage input capacity (120/277V).

Battery: (EL Option) – Sealed, maintenance free nickel-cadmium battery delivers 90 minutes rated capacity. Test switch provides manual activation of 30-second diagnostic testing for on-demand visual inspection.

Self-diagnostic testing (SD Option Only) for 30 seconds every 30 days, 30 minutes every 180 days and a 90-minute annual test. Diagnostic evaluation of LED light source, charging and battery condition.

INSTALLATION — Universal (top, end or back mount), canopy included. Junction box hole pattern for 4" octagon mounting. Flexible conduit entry.

LISTINGS — UL listed. Wet location listed. Standard cold temperature rating -4°F to 122°F (-20°C to 50°C). Meets UL 924, NFPA 101 (current Life Safety Code) and NFPA 70-NEC

WARRANTY — 3-year limited warranty. (Battery is prorated.) Complete warranty terms located at www.acuitybrands.com/CustomerResources/Terms_and_conditions.aspx

Note: Actual performance may differ as a result of end-user environment and application.
All values are design or typical values, measured under laboratory conditions at 25 °C.
Specifications subject to change without notice.

Wet Location Exit Sign

WLTE

LED

Specifications

Length: 12-1/2 (31.8)
Depth: 2-1/2 (6.4)
Height: 8-1/8 (20.6)
Weight: 4.1 lbs (1.9 kg)

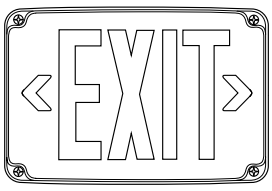

All dimensions are inches (centimeters) unless otherwise indicated.

ORDERING INFORMATION Lead times will vary depending on options selected. Consult with your sales representative.

Example: WLTE W 1 R EL

WLTE									
Series	**Housing color**		**Number of faces**		**Letter color**		**Operation**		**Options**	
WLTE	W	White	1	Single face	R	Red	(blank)	AC only	TP	Tamperproof screw hardware
	B	Black	2	Double face	G	Green	EL	Nickel-cadmium battery	SD	Self-diagnostics[1]
	GY	Gray								

Accessories: *Order as separate catalog number.*[2]	
ELA WG1	Wireguard (back mount only)

Notes

1 Only available with EL option.

2 See spec sheet ELA-WG.

SPECIFICATIONS

ELECTRICAL				
Primary circuit				
Type[1]	**Typical LED life[2]**	**AC volts**	**Input watts**	**Max. amps**
Red LED	10 years	120	2.7	0.03
		277	2.7	0.02
Green LED	10 years	120	3.3	0.03
		277	3.4	0.02

BATTERY				
Ni-Cad				
Voltage	**Shelf life[3]**	**Typical life[3]**	**Maintenance[4]**	**Optimum temperature[5]**
4.8	3 years	7-9 years	none	-4° – 122°F (-20° – 50°C)

Notes

1 LED lamps operate in normal (AC input) and emergency (DC input) modes.

2 Based on continuous operation. The typical life of the exit LED lamp is 10 years.

3 At 77°F (25°C).

4 All life safety equipment, including emergency lighting for path of egress, must be maintained, serviced and tested in accordance with all National Fire Protection Association (NFPA) and local codes. Failure to perform the required maintenance, service or testing could jeopardize the safety of occupants and will void all warranties.

5 Optimum ambient temperature range where unit will provide capacity for 90 minutes. Higher and lower temperatures affect life and capacity.

MOUNTING

Specifications

Length: 12-1/2 (31.8)

Depth: 2-1/2 (6.4)

Height: 8-1/8 (20.6)

Weight: 4.1 lbs (1.9 kg)

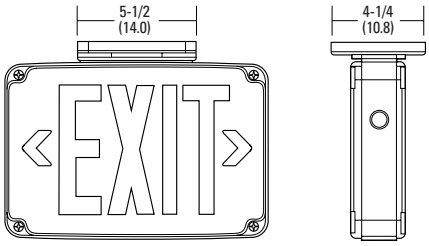

All dimensions are inches (centimeters) unless otherwise indicated.

© 2012-2018 Acuity Brands Lighting, Inc. All rights reserved. Rev. 01/30/2018

LITHONIA LIGHTING®

Catalog Number	
Notes	
Type	

Wet Location Emergency Light

WLTU

LED

WLTU

WLTU LED

FEATURES & SPECIFICATIONS

INTENDED USE — Ideal for wet location areas requiring emergency lighting that are subject to saturation with non-mechanically delivered water.

CONSTRUCTION — Gray, compact, low-profile contemporary design. Engineering-grade thermoplastic housing is impact-resistant, scratch-resistant and corrosion-proof. UL94V-0 flame rating. UV-stable resin resists discoloration from natural and man-made light sources. Full perimeter gasket seal between front and rear housing.

OPTICS — Lamp compatibility: **WLTU** – Two lamp heads with 7.2 watt PAR36 style lamps. **WLTU LED** – Two 1.9 watt white LED lamp in a composite PAR-36 style. Adjustable lamp heads with glass lens. The typical life of the LED lamp is 10 years for the WLTU LED.

ELECTRICAL — Dual-voltage input capacity (120V/277V).

Emergency unit provided with test switch, status indicator and rechargeable battery.

Battery: Delivers 90 minute emergency illumination. **WLTU** – Sealed, maintenance-free, lead calcium battery provides 14.4 watts rated capacity. **WLTU LED** – Sealed, maintenance-free nickel-cadmium battery provides capacity for 2-LED 9.6V remote lamp heads.

INSTALLATION — Wall-mount with external mounting tabs. Flexible conduit entry only (two 7/8" knockouts on each side).

LISTINGS — UL listed. Wet location listed. Model WLTU is temperature rated 41°F to 122°F (5°C - 50°C) and model WLTU LED temperature rated 32°F to 122°F (0°C to 50°C). Meets UL 924, NFPA 101 (current Life Safety Code), NFPA 70-NEC and OSHA illumination standards.

WARRANTY — WLTU 3-year limited warranty and WLTU LED 5-year limited warranty. (Battery is prorated.) Complete warranty terms located at www.acuitybrands.com/CustomerResources/Terms_and_conditions.aspx

Note: Actual performance may differ as a result of end-user environment and application.

All values are design or typical values, measured under laboratory conditions at 25 °C.

Specifications subject to change without notice.

Specifications

WLTU:

Length: 8-3/8 (21.3)

Depth: 6 (15.2)

Height: 12-7/8 (32.7)

Weight: 12.5 lbs (5.7 kg)

WLTU LED:

Length: 8 (20.3)

Depth: 3-5/8 (9.2)

Height: 12-1/4 (31.1)

Weight: 3.6 lbs (1.6 kg)

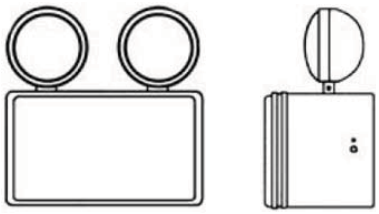

All dimensions are inches (centimeters) unless otherwise indicated.
See IES photometry at WLTU-WLTU-LED Photometry.

ORDERING INFORMATION Lead times will vary depending on options selected. Consult with your sales representative.

Example: WLTU

Series		Options	
WLTU	Emergency light with 6V, 14.4 watt capacity	T20C	California Title 20 Compliance[2]
WLTU LED	Emergency light with 1.9W, 9.6V LED lamp heads and 3.7 watts remote capacity[1]		

Accessories: *Order as separate catalog number.*	
ELA Q L0309	Single LED indoor remote head, white (1.5W, 9.6V)[3,4]
ELA T Q L0309	Twin LED indoor remote head, white (3W, 9.6V)[3,4]
ELA QWP L0309	Single LED weather-proof remote head, gray (1.5W, 9.6V)[3,4]
ELA T QWP L0309	Twin LED weather-proof remote head, gray (3W, 9.6V)[3,4]
ELA LED	Single LED indoor remote head, white (1W, 9.6V)[3,4]
ELA LED T	Twin LED indoor remote head, white (2W, 9.6V)[3,4]
ELA LED WP	Single LED weather-proof remote head, gray (1W, 9.6V)[3,4]
ELA LED T WP	Twin LED weather-proof remote head, gray (2W, 9.6V)[3,4]
ELA WG2	Wireguard (back mount only)[5]

Notes

1 Operates up to two 9.6V LED remote heads (see accessories).
2 See T20C compliance product list. Only available with WLTU LED.
3 Only available with WLTU LED.
4 See spec sheet ELA LED. See spec sheet ELA Q LED.
5 See spec sheet ELA-WG.

SPECIFICATIONS

ELECTRICAL					
Primary circuit					
	AC volts	**Input watts**	**Max. amps**	**Output volts**	**Output watts[2]**
WLTU	120	8.5	0.08	6	14.4
	277	10.0	0.04		
WLTU LED[1]	120	2.7	0.03	9.6	7.5
	277	2.7	0.02		

BATTERY					
	Voltage	**Shelf life[3]**	**Typical life[3]**	**Maintenance[4]**	**Optimum temperature[5]**
WLTU Lead calcium	6	12 months	3-5 years	none	41° – 122°F (5° – 50°C)
WLTU LED Ni-cad	9.6	3 years	7-9 years	none	32° – 122°F (0° – 50°C)

Notes

1 Based on continuous operation. The typical life of the LED lamp is 10 years.

2 Based on 1-1/2 hour run time rating.

3 At 77°F (25°C).

4 All life safety equipment, including emergency lighting for path of egress, must be maintained, serviced and tested in accordance with all National Fire Protection Association (NFPA) and local codes. Failure to perform the required maintenance, service or testing could jeopardize the safety of occupants and will void all warranties.

5 Optimum ambient temperature range where unit will provide capacity for 90 minutes. Higher and lower temperatures affect life and capacity.

©2013-2017 Acuity Brands Lighting, Inc. All rights reserved. Rev. 02/16/17

d#series

D-Series Size 1
LED Flood Luminaire

Catalog Number

Notes

Type

Hit the Tab key or mouse over the page to see all interactive elements.

Introduction

The D-Series Size 1 Flood features precision optics to beautifully illuminate a variety of applications while its sleek, compact styling blends seamlessly with the environment.

The D-Series Flood reflector systems and cutting-edge chip-on-board LED technology produce excellent uniformity combined with precision beam patterns for minimal spill light and incredible photometric performance. It's the ideal long-life replacement for 70 - 150W metal halide floods, with typical energy savings of 72% and expected service life of over 100,000 hours.

Specifications

EPA:	0.6 ft² (0.05 m²)
Depth:	3-1/8″ (8.0 cm)
Width:	8-7/8″ (22.4 cm)
Height:	7-3/4″ (19.8 cm)
Overall Height	12″ (30.5 cm)
Weight:	7.2 lbs (3.3 kg)

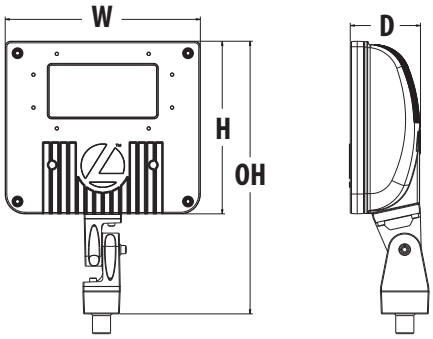

Ordering Information

EXAMPLE: DSXF1 LED P1 40K MSP MVOLT THK DDBXD

DSXF1 LED

Series	Performance Package	Color Temperature	Distribution	Voltage	Mounting	Options	Finish *(required)*
DSXF1 LED	P1 P2	30K 3000K 40K 4000K 50K 5000K	NSP Narrow spot MSP Medium spot MFL Medium flood FL Flood WFL Wide flood WFR Wide flood, rectangular HMF Horizontal flood	MVOLT [1] 120 [1] 208 [1] 240 [1] 277 [1] 347	**Shipped included** THK Knuckle with 1/2″ NPS threaded pipe IS Integral slipfitter (fits 2-3/8″ O.D. tenon) YKC62 Yoke with 16-3 SO cord **Shipped separately** [2] DSXF1/2TS Tenon slipfitter (2-3/8″ O.D. THK required) FTS CG6 Tenon Slipfitter (fits 2-3/8″ to 2-7/8″ O.D. tenon. YKC62 required)	**Shipped installed** PE Photocontrol, button style [3,4] PEX Photocontrol external threaded adjustable[4] SF Single fuse (120, 277, 347V) [4,5] DF Double fuse (208, 240)[6] DMG 0-10V dimming driver (no controls)[5] **Shipped separately** [2] UBV Upper/bottom visor (universal) FV Full visor VG Vandal guard	DDBXD Dark bronze DBLXD Black DNAXD Natural aluminum DWHXD White

Accessories

Ordered and shipped separately.

DSXF1/2TS DDBXD U	Slipfitter for 1-1/4″ to 2-3/8″ OD tenons; mates with 1/2″ threaded knuckle (specify finish)
FRWB DDBXD U	Radius wall bracket, 2-3/8″ OD tenon (specify finish)
FSPB DDBXD U	Steel square pole bracket, 2-3/8″ OD tenon (specify finish)
DSXF1UBV DDBXD U	Upper/bottom visor accessory (specify finish)
DSXF1FV DDBXD U	Full visor accessory (specify finish)
DSXF1VG U	Vandal guard accessory

For more mounting options, visit our Floodlighting Accessories pages.

Stock configurations are offered for shorter lead times:

Standard Part Number	Stock Part Number
DSXF1 LED P1 50K WFL MVOLT THK DDBXD	**DSXF1 LED P1 50K**
DSXF1 LED P1 40K WFL MVOLT THK DDBXD	**DSXF1 LED P1 40K**
DSXF1 LED P2 50K WFL MVOLT THK DDBXD	**DSXF1 LED P2 50K**
DSXF1 LED P2 40K WFL MVOLT THK DDBXD	**DSXF1 LED P2 40K**

NOTES

1. MVOLT driver operates on line voltage from 120-277V. Specify voltage when ordering with fusing (SF, DF) or photo control (PE, PEX).
2. Also available as accessories; see Accessories information at left.
3. Rated 25C maximum ambient for performance package P2. Specify PEX for higher ambient temperatures.
4. Photocontrol (PE, PEX) requires 120, 208, 240, 277 or 347 voltage option.
5. Must specify 120, 277 or 347 voltage option.
6. Must specify 208 or 240 voltage option.

LITHONIA LIGHTING

One Lithonia Way • Conyers, Georgia 30012 • Phone: 800.279.8041 • www.lithonia.com

© 2012-2016 Acuity Brands Lighting, Inc. All rights reserved.

Performance Data

Lumen Output

Lumen values are from photometric tests performed in accordance with IESNA LM-79-08. Data is considered to be representative of the configurations shown, within the tolerances allowed by Lighting Facts. Actual performance may differ as a result of end-user environment and application. Actual wattage may differ by +/- 8% when operating between 120-480V +/- 10%. Contact factory for performance data on any configurations not shown here.

Performance Package	System Watts	Dist. Type	Field Angle		Beam Angle		30K (3000K, 70 CRI)			40K (4000K, 70 CRI)			50K (5000K, 70 CRI)		
			°H	°V	°H	°V	Max Cd	Lumens	LPW	Max Cd	Lumens	LPW	Max Cd	Lumens	LPW
P1	21W	NSP	37	38	18	19	16,316	2,601	124	18,039	2,876	137	18,039	2,876	137
		MSP	51	51	27	28	9,908	2,578	123	10,954	2,850	136	10,954	2,850	136
		MFL	60	60	46	45	4,027	2,435	116	4,452	2,692	128	4,452	2,692	128
		FL	84	91	59	72	2,255	2,682	128	2,494	2,965	141	2,494	2,965	141
		WFL	109	101	86	85	1,494	2,766	132	1,652	3,058	146	1,652	3,058	146
		WFR	103	92	80	71	1,809	2,794	133	2,000	3,089	147	2,000	3,089	147
		HMF	124	63	100	48	2,001	2,329	111	2,212	2,575	123	2,212	2,575	123
P2	42W	NSP	37	38	18	19	29,740	4,741	113	32,881	5,242	125	32,881	5,242	125
		MSP	51	51	27	28	18,060	4,699	112	19,967	5,195	124	19,967	5,195	124
		MFL	60	50	46	45	7,340	4,439	106	8,115	4,908	117	8,115	4,908	117
		FL	84	91	59	72	4,111	4,889	116	4,545	5,406	129	4,545	5,406	129
		WFL	109	101	86	85	2,568	4,753	113	3,011	5,573	133	3,011	5,579	133
		WFR	103	92	80	71	3,297	5,094	121	3,645	5,631	134	3,645	5,632	134
		HMF	124	63	100	48	3,647	4,245	101	4,032	4,693	112	4,032	4,693	112

Lumen Ambient Temperature (LAT) Multipliers

Use these factors to determine relative lumen output for average ambient temperatures from 0-40°C (32-104°F).

Ambient	
0°C	32°F
10°C	50°F
20°C	68°F
25°C	**77°F**
30°C	86°F
40°C	104°F

Projected LED Lumen Maintenance

Data references the extrapolated performance projections for the **DSXF1 LED P2** platform noted in a 25C ambient, based on 10,000 hours of LED testing (tested per IESNA LM-80-08 and projected per IESNA TM-21-11).

To calculate LLF, use the lumen maintenance factor that corresponds to the desired number of operating hours below. For other lumen maintenance values, contact factory.

Operating Hours	0	25,000	50,000	100,000
Lumen Maintenance Factor	1.0	0.97	0.96	0.95

Electrical Load

Light Engines	System Watts	Current (A)					
		120	208	240	277	347	480
P1	21W	0.18	0.1	0.09	0.08	0.07	-
P2	42W	0.35	0.20	0.18	0.15	0.12	-

Photometric Diagrams

To see complete photometric reports or download .ies files for this product, visit Lithonia Lighting's D-Series Flood Size 1 homepage.

Isocandela plots for the DSXF1 LED P2 40K.

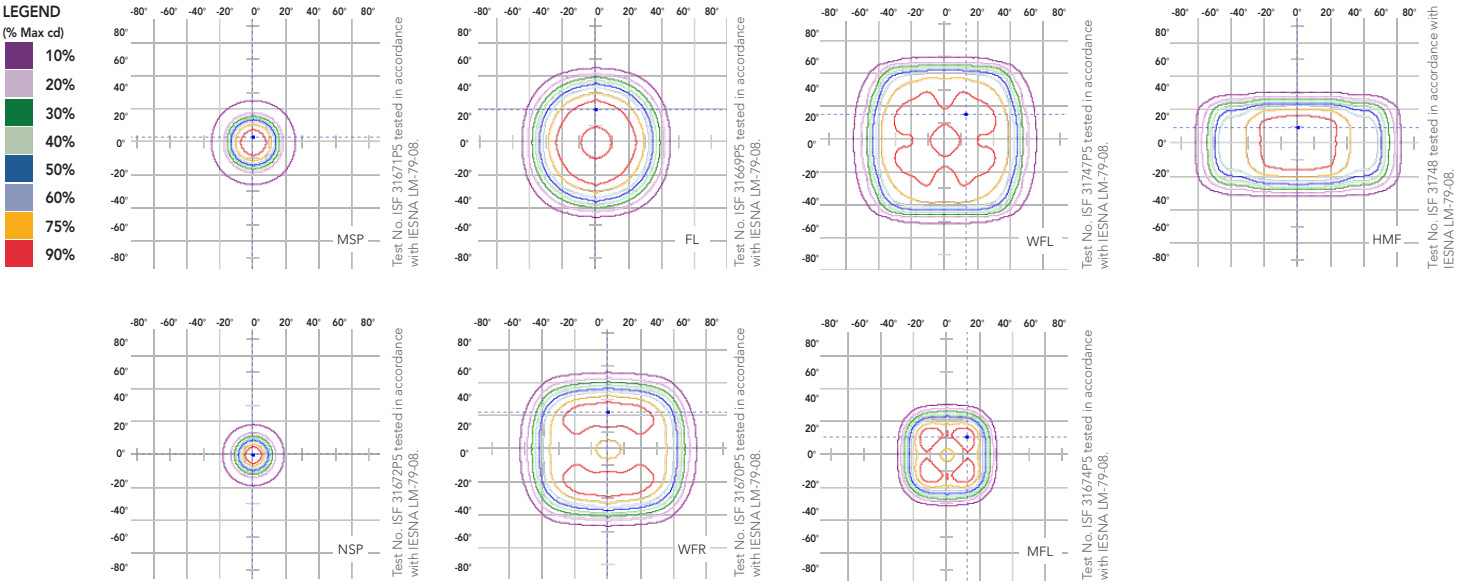

© 2012-2016 Acuity Brands Lighting, Inc. All rights reserved.

Mounting, Options and Accessories

THK - Knuckle with 1/2" NPS threaded pipe

YKC62 - Yoke with SO cord
H= 4-1/4" (10.7 cm)
D= 2-1/4" (5.7 cm)

IS – Integral slipfitter
H= 2-1/2" (6.3 cm)
ID= 2-3/8" (6.0 cm)
OD= 3-1/2" (8.8 cm)

UBV – Upper/bottom visor
W= 5-1/4" (13.3 cm)
H= 2-1/2" (6.3 cm)
D= 3" (7.6 cm)

FV – Full visor
W= 5-1/4" (13.3 cm)
H= 2-1/2" (6.3 cm)
D= 3" (7.6 cm)

VG – Vandal guard
W= 6-1/2" (16.5 cm)
H= 4" (10.1 cm)

FEATURES & SPECIFICATIONS

INTENDED USE
The sleek design of the D-Series Size 1 Flood reflects the embedded high performance LED technology. It is ideal for landscape, signage and accent lighting in many commercial and residential applications.

CONSTRUCTION
Die-cast aluminum housing has integral heat sink fins to optimize thermal management through conductive and convective cooling. The LED driver is mounted in direct contact with the casting to promote low operating temperature and long life. Housing is completely sealed against moisture and environmental contaminants using a tempered glass lens(IP66). Low EPA (0.6 ft^2) for optimized wind loading.

FINISH
Exterior parts are protected by a zinc-infused Super Durable TGIC thermoset powder coat finish that provides superior resistance to corrosion and weathering. A tightly controlled multi-stage process ensures a minimum 3 mils thickness for a finish that can withstand extreme climate changes without cracking or peeling.

OPTICS
A variety of precision-molded vacuum-metallized specular reflectors are engineered for superior target illumination, uniformity and spacing. Light engines are available in 3000K (70 CRI min.), 4000K (70 CRI min.) or 5000K (70 CRI min.) configurations. Optional visors offer additional versatility.

ELECTRICAL
Light engine(s) consist of chip-on-board (COB) LEDs directly coupled to the housing to maximize heat dissipation and promote long life (100,000 hrs, L80). Single-engine unit uses a Class 2 electronic driver; dual-engine unit uses a Class 1 electronic driver. Both drivers have a power factor >90%, THD <20%, and an expected life of 100,000 hours. Standard 6KV surge protection meets a minimum Category C Low operation (per ANSI/IEEE C62.41.2).

INSTALLATION
Integral adjustable knuckle with 1/2-14NPS threaded pipe, tenon slipfitter, or integral slipfitter, facilitates quick and easy installation to a variety of mounting accessories. This secure connection enables the D-Series Size 1 to withstand up to a 1.5 G vibration load rating per ANSI C136.31.

LISTINGS
CSA certified to U.S. and Canadian standards. Luminaire is IP66 rated. Rated for -40°C minimum ambient.

DesignLights Consortium® (DLC) Premium qualified product and DLC qualified product. Not all versions of this product may be DLC Premium qualified or DLC qualified. Please check the DLC Qualified Products List at www.designlights.org/QPL to confirm which versions are qualified.

WARRANTY
5-year limited warranty. Complete warranty terms located at:
www.acuitybrands.com/CustomerResources/Terms_and_conditions.aspx.

Note: Actual performance may differ as a result of end-user environment and application. All values are design or typical values, measured under laboratory conditions at 25 °C. Specifications subject to change without notice.

© 2012-2016 Acuity Brands Lighting, Inc. All rights reserved.

D-Series Size 1
LED Wall Luminaire

Catalog Number

Notes

Type

Hit the Tab key or mouse over the page to see all interactive elements.

d series

Specifications

Luminaire

Width:	13-3/4" (34.9 cm)	**Weight:**	12 lbs (5.4 kg)
Depth:	10" (25.4 cm)		
Height:	6-3/8" (16.2 cm)		

Back Box (BBW, ELCW)

Width:	13-3/4" (34.9 cm)	**BBW Weight:**	5 lbs (2.3 kg)
Depth:	4" (10.2 cm)	**ELCW Weight:**	10 lbs (4.5 kg)
Height:	6-3/8" (16.2 cm)		

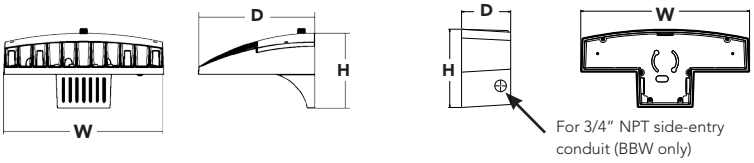

Introduction

The D-Series Wall luminaire is a stylish, fully integrated LED solution for building-mount applications. It features a sleek, modern design and is carefully engineered to provide long-lasting, energy-efficient lighting with a variety of optical and control options for customized performance.

With an expected service life of over 20 years of nighttime use and up to 74% in energy savings over comparable 250W metal halide luminaires, the D-Series Wall is a reliable, low-maintenance lighting solution that produces sites that are exceptionally illuminated.

Ordering Information

EXAMPLE: DSXW1 LED 20C 1000 40K T3M MVOLT DDBTXD

DSXW1 LED

Series	LEDs	Drive Current	Color temperature	Distribution	Voltage	Mounting	Control Options
DSXW1 LED	**10C** 10 LEDs (one engine) **20C** 20 LEDs (two engines)	**350** 350 mA **530** 530 mA **700** 700 mA **1000** 1000 mA (1 A)	**30K** 3000 K **40K** 4000 K **50K** 5000 K **AMBPC** Amber phosphor converted	**T2S** Type II Short **T2M** Type II Medium **T3S** Type III Short **T3M** Type III Medium **T4M** Type IV Medium **TFTM** Forward Throw Medium **ASYDF** Asymmetric diffuse	**MVOLT** [1] **120** [1] **208** [1] **240** [1] **277** [1] **347** [2] **480** [2]	**Shipped included** (blank) Surface mounting bracket **BBW** Surface-mounted back box (for conduit entry) [3]	**Shipped installed** **PE** Photoelectric cell, button type [4] **DMG** 0-10V dimming driver (no controls) **PIR** 180° motion/ambient light sensor, <15' mtg ht [5] **PIRH** 180° motion/ambient light sensor, 15-30' mtg ht [5] **PIR1FC3V** Motion/ambient sensor, 8-15' mounting height, ambient sensor enabled at 1fc[5] **PIRH1FC3V** Motion/ambient sensor, 15-30' mounting height, ambient sensor enabled at 1fc[5] **ELCW** Emergency battery backup (includes external component enclosure) [6]

Other Options				Finish *(required)*					
Shipped installed		**Shipped separately** [8]		**DDBXD**	Dark bronze	**DSSXD**	Sandstone	**DWHGXD**	Textured white
SF	Single fuse (120, 277 or 347V) [7]	**BSW**	Bird-deterrent spikes	**DBLXD**	Black	**DDBTXD**	Textured dark bronze	**DSSTXD**	Textured sandstone
DF	Double fuse (208, 240 or 480V) [7]	**WG**	Wire guard	**DNAXD**	Natural aluminum	**DBLBXD**	Textured black		
HS	House-side shield [8]	**VG**	Vandal guard	**DWHXD**	White	**DNATXD**	Textured natural aluminum		
SPD	Separate surge protection [9]	**DDL**	Diffused drop lens						

Accessories

Ordered and shipped separately.

DSXWHS U	House-side shield (one per light engine)
DSXWBSW U	Bird-deterrent spikes
DSXW1WG U	Wire guard accessory
DSXW1VG U	Vandal guard accessory

NOTES

1. MVOLT driver operates on any line voltage from 120-277V (50/60 Hz). Specify 120, 208, 240 or 277 options only when ordering with fusing (SF, DF options), or photocontrol (PE option).
2. Only available with 20C, 700mA or 1000mA. Not available with PIR or PIRH.
3. Back box ships installed on fixture. Cannot be field installed. Cannot be ordered as an accessory.
4. Photocontrol (PE) requires 120, 208, 240, 277 or 347 voltage option. Not available with motion/ambient light sensors (PIR or PIRH).
5. PIR and PIR1FC3V specifies the Sensor Switch SBGR-10-ODP control; PIRH specifies the Sensor Switch SBGR-6-ODP control; see Motion Sensor Guide for details. Includes ambient light sensor. Not available with "PE" option (button type photocell). Dimming driver standard. Not available with 20 LED/1000 mA configuration (DSXW1 LED 20C 1000).
6. Cold weather (-20C) rated. Not compatible with conduit entry applications. Not available with BBW mounting option. Not available with fusing. Not available with 347 or 480 voltage options. Emergency components located in back box housing. Emergency mode IES files located on product page at www.lithonia.com
7. Single fuse (SF) requires 120, 277 or 347 voltage option. Double fuse (DF) requires 208, 240 or 480 voltage option. Not available with ELCW.
8. Also available as a separate accessory; see Accessories information.
9. See the electrical section on page 3 for more details.

LITHONIA LIGHTING

One Lithonia Way • Conyers, Georgia 30012 • Phone: 800.279.8041 • www.lithonia.com

© 2013-2016 Acuity Brands Lighting, Inc. All rights reserved.

Performance Data

Lumen Output

Lumen values are from photometric tests performed in accordance with IESNA LM-79-08. Data is considered to be representative of the configurations shown, within the tolerances allowed by Lighting Facts. Contact factory for performance data on any configurations not shown here.

LEDs	Drive Current (mA)	System Watts	Dist. Type	30K					40K					50K					AMBER				
				Lumens	B	U	G	LPW	Lumens	B	U	G	LPW	Lumens	B	U	G	LPW	Lumens	B	U	G	LPW
10C (10 LEDs)	350mA	14W	T2S	1,415	0	0	1	101	1,520	0	0	1	109	1,529	0	0	1	109	894	0	0	1	64
			T2M	1,349	0	0	1	96	1,449	0	0	1	104	1,458	0	0	1	104	852	0	0	1	61
			T3S	1,400	0	0	1	100	1,503	0	0	1	107	1,512	0	0	1	108	884	0	0	1	63
			T3M	1,386	0	0	1	99	1,488	0	0	1	106	1,497	0	0	1	107	876	0	0	1	63
			T4M	1,358	0	0	1	97	1,458	0	0	1	104	1,467	0	0	1	105	858	0	0	1	61
			TFTM	1,411	0	0	1	101	1,515	0	0	1	108	1,525	0	0	1	109	892	0	0	1	64
			ASYDF	1,262	0	0	1	90	1,355	1	0	1	97	1,363	1	0	1	97	797	0	0	1	57
	530 mA	20W	T2S	2,054	1	0	1	103	2,205	1	0	1	110	2,219	1	0	1	111	1,264	0	0	1	63
			T2M	1,957	1	0	1	98	2,102	1	0	1	105	2,115	1	0	1	106	1,205	0	0	1	60
			T3S	2,031	0	0	1	102	2,181	0	0	1	109	2,195	0	0	1	110	1,250	0	0	1	63
			T3M	2,010	1	0	1	101	2,159	1	0	1	108	2,172	1	0	1	109	1,237	0	0	1	62
			T4M	1,970	1	0	1	99	2,115	1	0	1	106	2,128	0	0	1	106	1,212	0	0	1	61
			TFTM	2,047	0	0	1	102	2,198	0	0	1	110	2,212	0	0	1	111	1,260	0	0	1	63
			ASYDF	1,830	1	0	1	92	1,966	1	0	1	98	1,978	1	0	1	99	1,127	0	0	1	56
	700 mA	27W	T2S	2,623	1	0	1	97	2,816	1	0	1	104	2,834	1	0	1	105	1,544	0	0	1	57
			T2M	2,499	1	0	1	93	2,684	1	0	1	99	2,701	1	0	1	100	1,472	0	0	1	55
			T3S	2,593	1	0	1	96	2,785	1	0	1	103	2,802	1	0	1	104	1,527	0	0	1	57
			T3M	2,567	1	0	1	95	2,757	1	0	1	102	2,774	1	0	1	103	1,512	0	0	1	56
			T4M	2,515	1	0	1	93	2,701	1	0	1	100	2,718	1	0	1	101	1,481	0	0	1	55
			TFTM	2,614	1	0	1	97	2,807	1	0	1	104	2,825	1	0	1	105	1,539	0	0	1	57
			ASYDF	2,337	1	0	1	87	2,510	1	0	1	93	2,526	1	0	1	94	1,376	0	0	1	51
	1000 mA	40W	T2S	3,685	1	0	1	92	3,957	1	0	1	99	3,982	1	0	1	100	2,235	1	0	1	58
			T2M	3,512	1	0	1	88	3,771	1	0	1	94	3,795	1	0	1	95	2,130	1	0	2	55
			T3S	3,644	1	0	1	91	3,913	1	0	1	98	3,938	1	0	1	98	2,210	1	0	2	57
			T3M	3,607	1	0	1	90	3,874	1	0	1	97	3,898	1	0	1	97	2,187	1	0	2	56
			T4M	3,534	1	0	1	88	3,795	1	0	1	95	3,819	1	0	1	95	2,143	1	0	2	55
			TFTM	3,674	1	0	1	92	3,945	1	0	1	99	3,969	1	0	1	99	2,228	1	0	2	57
			ASYDF	3,284	1	0	1	82	3,527	1	0	1	88	3,549	1	0	1	89	1,991	1	0	2	51
20C (20 LEDs)	350mA	24W	T2S	2,820	1	0	1	118	3,028	1	0	1	126	3,047	1	0	1	127	1,777	1	0	1	74
			T2M	2,688	1	0	1	112	2,886	1	0	1	120	2,904	1	0	1	121	1,693	1	0	1	71
			T3S	2,789	1	0	1	116	2,995	1	0	2	125	3,013	1	0	2	126	1,757	0	0	1	73
			T3M	2,761	1	0	1	115	2,964	1	0	2	124	2,983	1	0	2	124	1,739	1	0	1	72
			T4M	2,705	1	0	1	113	2,904	1	0	2	121	2,922	1	0	2	122	1,704	1	0	1	71
			TFTM	2,811	1	0	1	117	3,019	1	0	2	126	3,038	1	0	2	127	1,771	0	0	1	74
			ASYDF	2,513	1	0	1	105	2,699	1	0	2	112	2,716	1	0	2	113	1,584	1	0	1	66
	530 mA	36W	T2S	4,079	1	0	1	113	4,380	1	0	1	122	4,408	1	0	1	122	2,504	1	0	1	70
			T2M	3,887	1	0	1	108	4,174	1	0	1	116	4,200	1	0	1	117	2,387	1	0	1	66
			T3S	4,034	1	0	1	112	4,332	1	0	1	120	4,359	1	0	1	121	2,477	1	0	1	69
			T3M	3,993	1	0	1	111	4,288	1	0	1	119	4,315	1	0	1	120	2,451	1	0	2	68
			T4M	3,912	1	0	2	109	4,201	1	0	2	117	4,227	1	0	1	117	2,402	1	0	1	67
			TFTM	4,066	1	0	1	113	4,367	1	0	1	121	4,394	1	0	1	122	2,496	1	0	1	69
			ASYDF	3,635	1	0	2	101	3,904	1	0	2	108	3,928	1	0	2	109	2,232	1	0	1	62
	700 mA	47W	T2S	5,188	1	0	1	110	5,571	1	0	1	119	5,606	1	0	1	119	3,065	1	0	1	65
			T2M	4,945	1	0	1	105	5,310	1	0	1	113	5,343	1	0	1	114	2,921	1	0	1	62
			T3S	5,131	1	0	1	109	5,510	1	0	2	117	5,544	1	0	2	118	3,031	1	0	1	64
			T3M	5,079	1	0	2	108	5,454	1	0	2	116	5,488	1	0	2	117	3,000	1	0	1	64
			T4M	4,976	1	0	2	106	5,343	1	0	2	114	5,377	1	0	2	114	2,939	1	0	1	63
			TFTM	5,172	1	0	2	110	5,554	1	0	2	118	5,589	1	0	2	119	3,055	1	0	1	65
			ASYDF	4,624	1	0	2	98	4,966	1	0	2	106	4,997	1	0	2	106	2,732	1	0	1	58
	1000 mA	74W	T2S	7,205	1	0	1	97	7,736	1	0	1	105	7,785	1	0	1	105	4,429	1	0	1	61
			T2M	6,866	1	0	2	93	7,373	1	0	2	100	7,419	1	0	2	100	4,221	1	0	2	58
			T3S	7,124	1	0	2	96	7,650	1	0	2	103	7,698	1	0	2	104	4,380	1	0	2	60
			T3M	7,052	1	0	2	95	7,736	1	0	2	105	7,620	1	0	2	103	4,335	1	0	2	59
			T4M	6,910	1	0	2	93	7,420	1	0	2	100	7,466	1	0	2	101	4,248	1	0	2	58
			TFTM	7,182	1	0	2	97	7,712	1	0	2	104	7,760	1	0	2	105	4,415	1	0	2	60
			ASYDF	6,421	1	0	2	87	6,895	2	0	2	93	6,938	2	0	2	94	3,947	1	0	2	54

© 2013-2016 Acuity Brands Lighting, Inc. All rights reserved.

Performance Data

Lumen Ambient Temperature (LAT) Multipliers

Use these factors to determine relative lumen output for average ambient temperatures from 0-40°C (32-104°F).

Ambient		Lumen Multiplier
0°C	32°F	1.02
10°C	50°F	1.01
20°C	68°F	1.00
25°C	**77°F**	**1.00**
30°C	86°F	1.00
40°C	104°F	0.98

Projected LED Lumen Maintenance

Data references the extrapolated performance projections for the **DSXW1 LED 20C 1000** platform in a **25°C ambient**, based on 10,000 hours of LED testing (tested per IESNA LM-80-08 and projected per IESNA TM-21-11).

To calculate LLF, use the lumen maintenance factor that corresponds to the desired number of operating hours below. For other lumen maintenance values, contact factory.

Operating Hours	0	25,000	50,000	100,000
Lumen Maintenance Factor	1.0	0.95	0.93	0.88

Electrical Load

			Current (A)					
LEDs	Drive Current (mA)	System Watts	120V	208V	240V	277V	347V	480V
10C	350	14 W	0.13	0.07	0.06	0.06	-	-
	530	20 W	0.19	0.11	0.09	0.08	-	-
	700	27 W	0.25	0.14	0.13	0.11	-	-
	1000	40 W	0.37	0.21	0.19	0.16	-	-
20C	350	24 W	0.23	0.13	0.12	0.10	-	-
	530	36 W	0.33	0.19	0.17	0.14	-	-
	700	47 W	0.44	0.25	0.22	0.19	0.15	0.11
	1000	74 W	0.69	0.40	0.35	0.30	0.23	0.17

Photometric Diagrams

To see complete photometric reports or download .ies files for this product, visit Lithonia Lighting's D-Series Wall Size 1 homepage.

Isofootcandle plots for the DSXW1 LED 20C 1000 40K. Distances are in units of mounting height (15').

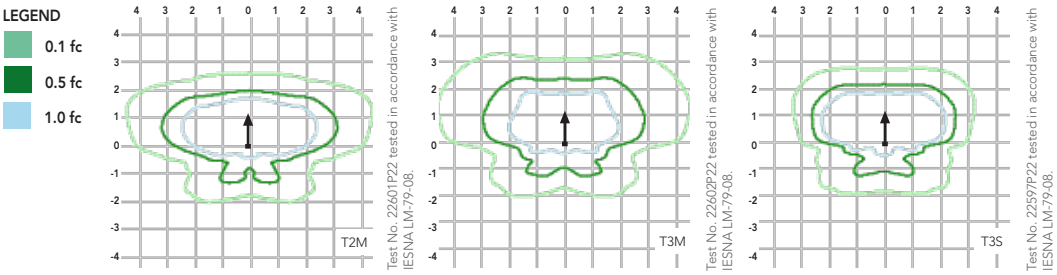

Distribution overlay comparison to 250W metal halide.

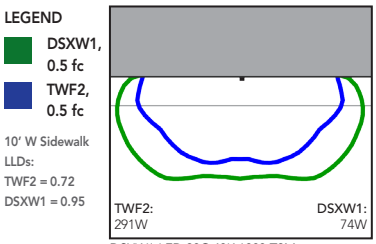

DSXW1 LED 20C 40K 1000 T3M, TWF2 250M Pulse, 15' Mounting Ht

Options and Accessories

T3M (left), ASYDF (right) lenses

HS - House-side shields

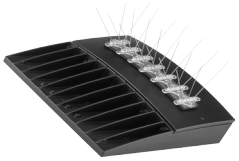

BSW - Bird-deterrent spikes

WG - Wire guard

VG - Vandal guard

DDL - Diffused drop lens

FEATURES & SPECIFICATIONS

INTENDED USE

The energy savings, long life and easy-to-install design of the D-Series Wall Size 1 make it the smart choice for building-mounted doorway and pathway illumination for nearly any facility.

CONSTRUCTION

Two-piece die-cast aluminum housing has integral heat sink fins to optimize thermal management through conductive and convective cooling. Modular design allows for ease of maintenance. The LED driver is mounted to the door to thermally isolate it from the light engines for low operating temperature and long life. Housing is completely sealed against moisture and environmental contaminants (IP65).

FINISH

Exterior parts are protected by a zinc-infused Super Durable TGIC thermoset powder coat finish that provides superior resistance to corrosion and weathering. A tightly controlled multi-stage process ensures a minimum 3 mils thickness for a finish that can withstand extreme climate changes without cracking or peeling. Available in textured and non-textured finishes.

OPTICS

Precision-molded proprietary acrylic lenses provide multiple photometric distributions tailored specifically to building mounted applications. Light engines are available in 3000 K (70 min. CRI), 4000 K (70 min. CRI) or 5000 K (70 min. CRI) configurations.

ELECTRICAL

Light engine(s) consist of 10 high-efficacy LEDs mounted to a metal-core circuit board to maximize heat dissipation and promote long life (L88/100,000 hrs at 25°C). Class 1 electronic drivers have a power factor >90%, THD <20%, and a minimum 2.5KV surge rating. When ordering the SPD option, a separate surge protection device is installed within the luminaire which meets a minimum Category C Low (per ANSI/IEEE C62.41.2).

INSTALLATION

Included universal mounting bracket attaches securely to any 4" round or square outlet box for quick and easy installation. Luminaire has a slotted gasket wireway and attaches to the mounting bracket via corrosion-resistant screws.

LISTINGS

CSA certified to U.S. and Canadian standards. Rated for -40°C minimum ambient.

DesignLights Consortium® (DLC) qualified product. Not all versions of this product may be DLC qualified. Please check the DLC Qualified Products List at www.designlights.org to confirm which versions are qualified.

WARRANTY

Five-year limited warranty. Complete warranty terms located at www.acuitybrands.com/CustomerResources/Terms_and_conditions.aspx.

Note: Actual performance may differ as a result of end-user environment and application. All values are design or typical values, measured under laboratory conditions at 25 °C. Specifications subject to change without notice.

© 2013-2016 Acuity Brands Lighting, Inc. All rights reserved.

d:series

D-Series Size 2
LED Wall Luminaire

Catalog Number

Notes

Type

Hit the Tab key or mouse over the page to see all interactive elements.

Specifications

Luminaire

Width:	18-1/2" (47.0 cm)	**Weight:**	21 lbs (9.5 kg)
Depth:	10" (25.4 cm)		
Height:	7-5/8" (19.4 cm)		

Back Box (BBW)

Width:	5-1/2" (14.0 cm)	**BBW Weight:**	1 lbs (0.5 kg)
Depth:	1-1/2" (3.8 cm)		
Height:	4" (10.2 cm)		

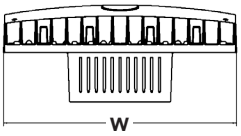

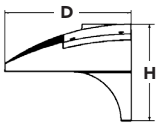

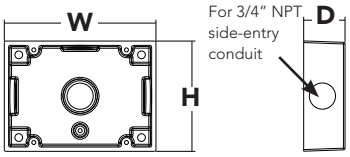

A+ Capable Luminaire

This item is an A+ capable luminaire, which has been designed and tested to provide consistent color appearance and system-level interoperability.

- All configurations of this luminaire meet the Acuity Brands' specification for chromatic consistency
- This luminaire is A+ Certified when ordered with DTL® controls marked by a shaded background. DTL DLL equipped luminaires meet the A+ specification for luminaire to photocontrol interoperability1
- This luminaire is part of an A+ Certified solution for ROAM®2 or XPoint™ Wireless control networks, providing out-of-the-box control compatibility with simple commissioning, when ordered with drivers and control options marked by a shaded background[1]

To learn more about A+, visit www.acuitybrands.com/aplus.

1. See ordering tree for details.
2. A+ Certified Solutions for ROAM require the order of one ROAM node per luminaire. Sold Separately: Link to Roam; Link to DTL DLL

A+ Capable options indicated by this color background.

Ordering Information

EXAMPLE: DSXW2 LED 30C 700 40K T3M MVOLT DDBTXD

DSXW2 LED

Series	LEDs	Drive Current	Color temperature	Distribution	Voltage	Mounting	Control Options
DSXW2 LED	20C 20 LEDs (two engines) 30C 30 LEDs (three engines)	350 350 mA 530 530 mA 700 700 mA 1000 1000 mA (1 A)	30K 3000 K 40K 4000 K 50K 5000 K AMBPC Amber phosphor converted	T2S Type II Short T2M Type II Medium T3S Type III Short T3M Type III Medium T4M Type IV Medium TFTM Forward Throw Medium ASYDF Asymmetric diffuse	MVOLT[1] 120[1] 208[1] 240[1] 277[1] 347[2] 480[2]	**Shipped included** (blank) Surface mounting bracket **Shipped separately[3]** BBW Surface-mounted back box (for conduit entry)	**Shipped installed** PE Photoelectric cell, button type[4] PER NEMA twist-lock receptacle only (no controls) DMG 0-10V dimming driver (no controls) DCR Dimmable and controllable via ROAM® (no controls)[5] PIRH 180° motion/ambient light sensor, 15-30' mtg ht[6] PIR1FC3V Motion/ambient sensor, 8-15' mounting height, ambient sensor enabled at 1fc[7] PIRH1FC3V Motion/ambient sensor, 15-30' mounting height, ambient sensor enabled at 1fc[7]

Other Options				Finish *(required)*					
Shipped installed		**Shipped separately[9]**		DDBXD	Dark bronze	DSSXD	Sandstone	DWHGXD	Textured white
SF	Single fuse (120, 277, 347V)[8]	BSW	Bird-deterrent spikes	DBLXD	Black	DDBTXD	Textured dark bronze	DSSTXD	Textured sandstone
DF	Double fuse (208, 240, 480V)[8]	WG	Wire guard	DNAXD	Natural aluminum	DBLBXD	Textured black		
HS	House-side shield[3]	VG	Vandal guard	DWHXD	White	DNATXD	Textured natural aluminum		
SPD	Separate surge protection[9]								

© 2012-2017 Acuity Brands Lighting, Inc. All rights reserved.

Ordering Information

Accessories

Ordered and shipped separately.

DLL127F 1.5 JU	Photocell - SSL twist-lock (120-277V) [10]
DLL347F 1.5 CUL JU	Photocell - SSL twist-lock (347V) [10]
DLL480F 1.5 CUL JU	Photocell - SSL twist-lock (480V) [10]
DSHORT SBK U	Shorting cap [10]
DSXWHS U	House-side shield (one per light engine)
DSXWBSW U	Bird-deterrent spikes
DSXW2WG U	Wire guard accessory
DSXW2VG U	Vandal guard accessory
DSXW2BBW DDBXD U	Back box accessory (specify finish)

For more control options, visit DTL and ROAM online.

NOTES

1 MVOLT driver operates on any line voltage from 120-277V (50/60 Hz). Specify 120, 208, 240 or 277 options only when ordering with fusing (SF, DF options), or photocontrol (PE option).
2 Available with 30 LED/700mA options only (DSXW2 LED 30C 700). DMG option not available.
3 Also available as a separate accessory; see Accessories information.
4 Photocontrol (PE) requires 120, 208, 240 or 347 voltage option. Not available with motion/ambient light sensors (PIR or PIRH).
5 Specifies a ROAM® enabled luminaire with 0-10V dimming capability; PER option required. Not available with 347V, 480V or PIRH. Additional hardware and services required for ROAM® deployment; must be purchased separately. Call 1-800-442-6745 or email: sales@roamservices.net.
6 Specifies the Sensor Switch SBGR-6-ODP control; see Outdoor Control Technical Guide for details. Includes ambient light sensor. Not available with "PE" option (button type photocell) or DCR. Dimming driver standard.
7 PIR and PIR1FC3V specify the SensorSwitch SBGR-10-ODP control; PIRH and PIRH1FC3V specify the SensorSwitch SBGR-6-ODP control; see Motion Sensor Guide for details. Dimming driver standard. Not available with PER5 or PER7. Ambient sensor disabled when ordered with DCR. Separate on/off required.
8 Single fuse (SF) requires 120, 277 or 347 voltage option. Double fuse (DF) requires 208, 240 or 480 voltage option.
9 See the electrical section on page 2 for more details.
10 Requires luminaire to be specified with PER option. Ordered and shipped as a separate line item.

Performance Data

Lumen Output

Lumen values are from photometric tests performed in accordance with IESNA LM-79-08. Data is considered to be representative of the configurations shown, within the tolerances allowed by Lighting Facts. Contact factory for performance data on any configurations not shown here.

LEDs	Drive Current (mA)	System Watts	Dist. Type	30K					40K					50K					AMBER				
				Lumens	B	U	G	LPW	Lumens	B	U	G	LPW	Lumens	B	U	G	LPW	Lumens	B	U	G	LPW
20C (20 LEDs)	350 mA	25W	T2S	2,783	1	0	1	111	2,989	1	0	1	120	3,007	1	0	1	120	1,720	1	0	1	69
			T2M	2,708	1	0	1	108	2,908	1	0	1	116	2,926	1	0	1	117	1,673	1	0	1	67
			T3S	2,748	1	0	1	110	2,951	1	0	1	118	2,970	1	0	1	119	1,698	0	0	1	68
			T3M	2,793	1	0	1	112	2,999	1	0	1	120	3,018	1	0	1	121	1,726	1	0	1	69
			T4M	2,756	1	0	1	110	2,959	1	0	1	118	2,978	1	0	1	119	1,703	0	0	1	68
			TFTM	2,754	1	0	1	110	2,957	1	0	1	118	2,975	1	0	1	119	1,701	0	0	1	68
	530 mA	36W	T2S	4,029	1	0	1	112	4,327	1	0	1	120	4,354	1	0	1	121	1,698	0	0	1	68
			T2M	3,920	1	0	1	109	4,210	1	0	1	117	4,236	1	0	1	118	1,726	1	0	1	69
			T3S	3,979	1	0	1	111	4,272	1	0	1	119	4,299	1	0	1	119	1,720	1	0	1	69
			T3M	4,044	1	0	1	112	4,342	1	0	2	121	4,369	1	0	2	121	1,701	0	0	1	68
			T4M	3,990	1	0	1	111	4,284	1	0	1	119	4,311	1	0	1	120	1,703	0	0	1	68
			TFTM	3,986	1	0	1	111	4,281	1	0	1	119	4,307	1	0	1	120	1,673	1	0	1	67
	700 mA	47W	T2S	5,130	1	0	1	109	5,509	1	0	1	117	5,544	1	0	1	118	2,473	1	0	1	69
			T2M	4,991	1	0	1	106	5,360	1	0	1	114	5,393	1	0	2	115	2,406	1	0	1	67
			T3S	5,066	1	0	1	108	5,440	1	0	1	116	5,474	1	0	1	116	2,442	1	0	1	68
			T3M	5,148	1	0	2	110	5,528	1	0	2	118	5,563	1	0	2	118	2,482	1	0	1	69
			T4M	5,080	1	0	1	108	5,455	1	0	1	116	5,489	1	0	2	117	2,449	1	0	1	68
			TFTM	5,076	1	0	1	108	5,450	1	0	1	116	5,484	1	0	2	117	2,447	1	0	1	68
	1000 mA	74W	T2S	7,148	1	0	1	97	7,675	1	0	1	104	7,723	1	0	1	104	3,060	1	0	1	65
			T2M	6,954	1	0	2	94	7,467	1	0	2	101	7,514	2	0	2	102	2,977	1	0	1	63
			T3S	7,058	1	0	1	95	7,579	1	0	1	102	7,626	1	0	2	103	3,021	1	0	1	64
			T3M	7,173	1	0	2	97	7,702	1	0	2	104	7,750	1	0	2	105	3,070	1	0	1	65
			T4M	7,077	1	0	2	96	7,599	1	0	2	103	7,647	1	0	2	103	3,029	1	0	1	64
			TFTM	7,071	1	0	2	96	7,593	1	0	2	103	7,641	1	0	2	103	3,027	1	0	1	64
30C (30 LEDs)	350 mA	36W	T2S	4,160	1	0	1	116	4,467	1	0	1	124	4,495	1	0	1	125	2,573	1	0	1	103
			T2M	4,047	1	0	1	112	4,346	1	0	1	121	4,373	1	0	1	121	2,503	1	0	1	100
			T3S	4,107	1	0	1	114	4,411	1	0	1	123	4,438	1	0	1	123	2,541	1	0	1	102
			T3M	4,174	1	0	1	116	4,482	1	0	2	125	4,511	1	0	2	125	2,582	1	0	1	103
			T4M	4,119	1	0	1	114	4,423	1	0	1	123	4,450	1	0	1	124	2,547	1	0	1	102
			TFTM	4,115	1	0	1	114	4,419	1	0	1	123	4,447	1	0	1	124	2,545	1	0	1	102
	530 mA	54W	T2S	6,001	1	0	1	111	6,444	1	0	1	119	6,485	1	0	1	120	2,573	1	0	1	71
			T2M	5,839	1	0	1	108	6,270	1	0	2	116	6,309	1	0	2	117	2,503	1	0	1	70
			T3S	5,926	1	0	1	110	6,363	1	0	1	118	6,403	1	0	1	119	2,541	1	0	1	71
			T3M	6,022	1	0	2	112	6,467	1	0	2	120	6,507	1	0	2	121	2,582	1	0	1	72
			T4M	5,942	1	0	1	110	6,381	1	0	2	118	6,420	1	0	2	119	2,547	1	0	1	71
			TFTM	5,937	1	0	1	110	6,375	1	0	2	118	6,415	1	0	2	119	2,545	1	0	1	71
	700 mA	71W	T2S	7,609	1	0	1	107	8,170	1	0	1	115	8,221	2	0	2	116	3,696	1	0	1	68
			T2M	7,402	1	0	2	104	7,949	2	0	2	112	7,999	2	0	2	113	3,596	1	0	1	67
			T3S	7,513	1	0	1	106	8,068	1	0	2	114	8,118	1	0	2	114	3,649	1	0	1	68
			T3M	7,635	1	0	2	108	8,199	1	0	2	115	8,250	2	0	3	116	3,709	1	0	2	69
			T4M	7,533	1	0	2	106	8,089	1	0	2	114	8,140	1	0	2	115	3,659	1	0	1	68
			TFTM	7,527	1	0	2	106	8,083	1	0	2	114	8,133	1	0	2	115	3,656	1	0	1	68
	1000 mA	109W	T2S	10,468	2	0	2	96	11,241	2	0	2	103	11,311	2	0	2	104	4,559	1	0	1	64
			T2M	10,184	2	0	2	93	10,936	2	0	2	100	11,004	2	0	2	101	4,436	1	0	2	62
			T3S	10,336	1	0	2	95	11,099	1	0	2	102	11,169	2	0	2	102	4,502	1	0	1	63
			T3M	10,505	2	0	3	96	11,280	2	0	3	103	11,351	2	0	3	104	4,575	1	0	2	64
			T4M	10,364	1	0	2	95	11,129	1	0	2	102	11,199	2	0	2	103	4,514	1	0	2	64
			TFTM	10,356	1	0	2	95	11,120	2	0	2	102	11,190	2	0	2	103	4,510	1	0	1	64

Note:
Available with phosphor-converted amber LED's (nomenclature AMBPC). These LED's produce light with 97+% >530 nm.
Output can be calculated by applying a 0.7 factor to 4000 K lumen values and photometric files.

© 2012-2017 Acuity Brands Lighting, Inc. All rights reserved.

Performance Data

Lumen Ambient Temperature (LAT) Multipliers

Use these factors to determine relative lumen output for average ambient temperatures from 0-40°C (32-104°F).

Ambient		Lumen Multiplier
0°C	32°F	1.02
10°C	50°F	1.01
20°C	68°F	1.00
25°C	**77°F**	**1.00**
30°C	86°F	1.00
40°C	104°F	0.98

Electrical Load

			Current (A)					
LEDs	Drive Current (mA)	System Watts	120V	208V	240V	277V	347V	480V
20C	350	25 W	0.23	0.13	0.12	0.10	-	-
	530	36 W	0.33	0.19	0.17	0.14	-	-
	700	47 W	0.44	0.25	0.22	0.19	-	-
	1000	74 W	0.68	0.39	0.34	0.29	-	-
30C	350	36 W	0.33	0.19	0.17	0.14	-	-
	530	54 W	0.50	0.29	0.25	0.22	-	-
	700	71 W	0.66	0.38	0.33	0.28	0.23	0.16
	1000	109 W	1.01	0.58	0.50	0.44	-	-

Projected LED Lumen Maintenance

Data references the extrapolated performance projections for the **DSXW2 LED 30C 1000** platform in a **25°C ambient**, based on 10,000 hours of LED testing (tested per IESNA LM-80-08 and projected per IESNA TM-21-11).

To calculate LLF, use the lumen maintenance factor that corresponds to the desired number of operating hours below. For other lumen maintenance values, contact factory.

Operating Hours	0	25,000	50,000	100,000
Lumen Maintenance Factor	1.0	0.95	0.92	0.87

Photometric Diagrams

To see complete photometric reports or download .ies files for this product, visit Lithonia Lighting's D-Series Wall Size 2 homepage.

Isofootcandle plots for the DSXW2 LED 30C 1000 40K. Distances are in units of mounting height (25').

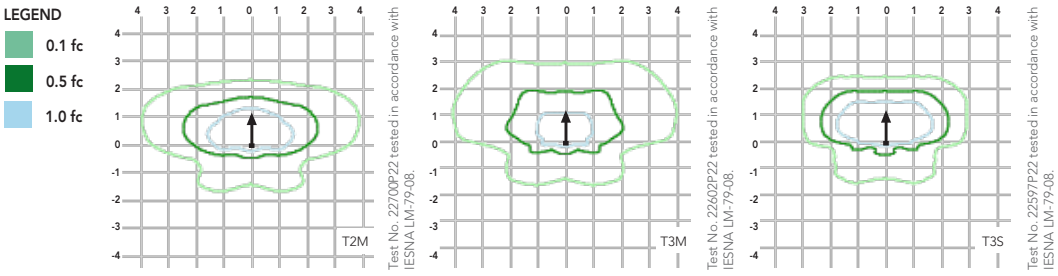

Distribution overlay comparison to 400W metal halide.

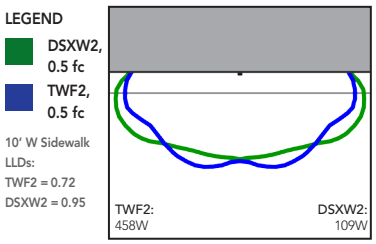

DSXW2 LED 30C 40K 1000 T2M, TWF2 400M Pulse, 25' Mounting Ht

FEATURES & SPECIFICATIONS

INTENDED USE

The energy savings, long life and easy-to-install design of the D-Series Wall Size 2 make it the smart choice for building-mounted doorway and pathway illumination for nearly any facility.

CONSTRUCTION

Two-piece die-cast aluminum housing has integral heat sink fins to optimize thermal management through conductive and convective cooling. Modular design allows for ease of maintenance. The LED driver is mounted to the door to thermally isolate it from the light engines for low operating temperature and long life. Housing is completely sealed against moisture and environmental contaminants (IP65).

FINISH

Exterior parts are protected by a zinc-infused Super Durable TGIC thermoset powder coat finish that provides superior resistance to corrosion and weathering. A tightly controlled multi-stage process ensures a minimum 3 mils thickness for a finish that can withstand extreme climate changes without cracking or peeling. Available in textured and non-textured finishes.

OPTICS

Precision-molded proprietary acrylic lenses provide multiple photometric distributions tailored specifically to building mounted applications. Light engines are available in 3000 K (70 min. CRI), 4000 K (70 min. CRI) or 5000 K (70 min. CRI) configurations.

ELECTRICAL

Light engine(s) consist of 10 high-efficacy LEDs mounted to a metal-core circuit board to maximize heat dissipation and promote long life (L87/100,000 hrs at 25°C). Class 1 electronic drivers have a power factor >90%, THD <20%, and a minimum 2.5KV surge rating. When ordering the SPD option, a separate surge protection device is installed within the luminaire which meets a minimum Category C Low (per ANSI/IEEE C62.41.2).

INSTALLATION

Included universal mounting bracket attaches securely to any 4" round or square outlet box for quick and easy installation. Luminaire has a slotted gasket wireway and attaches to the mounting bracket via corrosion-resistant screws.

LISTINGS

CSA certified to U.S. and Canadian standards. Rated for -40°C minimum ambient.

DesignLights Consortium® (DLC) qualified product. Not all versions of this product may be DLC qualified. Please check the DLC Qualified Products List at www.designlights.org to confirm which versions are qualified.

WARRANTY

Five-year limited warranty. Complete warranty terms located at www.acuitybrands.com/CustomerResources/Terms_and_conditions.aspx.

Note: Actual performance may differ as a result of end-user environment and application. All values are design or typical values, measured under laboratory conditions at 25 °C. Specifications subject to change without notice.

© 2012-2017 Acuity Brands Lighting, Inc. All rights reserved.

100 Camelot Drive
Fond du Lac, WI 54935
P: 920 | 926 | 9800
F: 920 | 926 | 9801

HVAC CALCULATIONS

COVER SHEET

DATE: 3/5/18

PROJECT: **Gehl Foods - Ammonia Condenser Upgrade**
N116 W15970 Main Street
Germantown, WI 53022

PROJECT NO.: **1805360**

OWNER: **Gehl Foods - Ammonia Condenser Upgrade**
N116 W15970 Main Street
Germantown, WI 53022

Raymond A. Del Ponte Date
Professional Engineer

HVAC Load Calculations
VERSION: 53.0
DATE: **4/12/2017**

EXCEL ENGINEERING, INC			
PROJECT:	Gehl Foods - Ammonia Condenser Upgrade	DATE:	03/05/18
PROJECT NO.:	1805360		

HVAC DESIGN DATA

IBC BUILDING CHAPTER

	GROUP A - ASSEMBLY
	BROUP B - BUSINESS
	GROUP E - EDUCATIONAL
X	GROUP F - FACTORY
	GROUP H - HIGH HAZARD
	GROUP I - INSTITUTIONAL
	GROUP M - MERCANTILE
	GROUP R- RESIDENTIAL
	GROUP S STORAGE
	GROUP U - UTILITY AND MISCELLANEOUS

CODES

MECHANICAL		
WISCONSIN		
IMC 2009	x	
IMC 2012		
IMC 2015		
ENERGY	IECC 2009	

BUILDING ORIENTATION 0

SEISMIC DESIGN CATEGORY A

DESIGN CONDITIONS:

LATITUDE 43

COUNTY Washington

	INSIDE	OUTSIDE	
	DB	DB	WB
WINTER:	60	-10	
SUMMER:	80	89	77
BELOW GRADE WALL:	0	0	
PARTITION:			
WINTER:	0	0	
SUMMER:	0	0	

TEMPERATURES: DEG F

CONSTRUCTION COEFFICIENT SUMMARY:

		"U" BTUH/S.F./F	SHADING COEFF.	E. L. BTUH/S.F./F	INFIL.
WALL:	(1)	0.034			
WALL:	(2)	0.266			
WALL:	(3)	1.176			
BELOW GRADE:		1.176			
PARTITION:		1.176			
GLASS:	(1)	0.000	0.000		
GLASS:	(2)	0.000	0.000		
SKYLIGHTS:		0.000	0.000		
ROOF:	(1)	0.121			
ROOF:	(2)	1.282			
EXPOSED FLOOR:		1.282			
PERIMETER:(E.L.)				0.430	
DOOR (OPAQUE):		0.800			

EXCEL ENGINEERING, INC

PROJECT:	**Gehl Foods - Ammonia Condenser Upgrade**	DATE:	03/05/18
PROJECT NO.:	**1805360**		

"U" VALUE CALCULATIONS

WALL (1)	R VALUE	WARM SIDE SURF TEMP	ROOF (1)	R VALUE	WARM SIDE SURF TEMP	BELOW GRADE WALL	R VALUE	WARM SIDE SURF TEMP
Fo	0.17	-9.6	Fo	0.17	-8.6	Fo	0.17	4.0
4" IMP	28.60	58.4	1-1/2" Roof Deck	7.50	54.8		0.00	4.0
	0.00	58.4		0.00	54.8		0.00	4.0
	0.00	58.4		0.00	54.8		0.00	4.0
	0.00	58.4		0.00	54.8		0.00	4.0
	0.00	58.4		0.00	54.8		0.00	4.0
	0.00	58.4		0.00	54.8		0.00	4.0
	0.00	58.4		0.00	54.8		0.00	4.0
	0.00	58.4		0.00	54.8		0.00	4.0
	0.00	58.4		0.00	54.8		0.00	4.0
Fi	0.68	60.0	Fi	0.61	60.0	Fi	0.68	60.0
TOTAL	29.45		TOTAL	8.28		TOTAL	0.85	
U=1/R=	0.034		U=1/R=	0.121		U=1/R=	1.176	

WALL (2)	R VALUE	WARM SIDE SURF TEMP	ROOF (2)	R VALUE	WARM SIDE SURF TEMP	PARTITION	R VALUE	WARM SIDE SURF TEMP
Fo	0.17	-6.8	Fo	0.17	5.3	Fo	0.17	0.0
8" CMU	1.72	25.2		0.00	5.3		0.00	0.0
3" Air Gap	1.00	43.8		0.00	5.3		0.00	0.0
4" Masonry	0.19	47.3		0.00	5.3		0.00	0.0
	0.00	47.3		0.00	5.3		0.00	0.0
	0.00	47.3		0.00	5.3		0.00	0.0
	0.00	47.3		0.00	5.3		0.00	0.0
	0.00	47.3		0.00	5.3		0.00	0.0
	0.00	47.3		0.00	5.3		0.00	0.0
	0.00	47.3		0.00	5.3		0.00	0.0
Fi	0.68	60.0	Fi	0.61	60.0	Fi	0.68	0.0
TOTAL	3.76		TOTAL	0.78		TOTAL	0.85	
U=1/R=	0.266		U=1/R=	1.282		U=1/R=	1.176	

WALL (3)	R VALUE	WARM SIDE SURF TEMP	EXPOSED FLOOR	R VALUE	WARM SIDE SURF TEMP
Fo	0.17	4.0	Fo	0.17	5.3
	0.00	4.0		0.00	5.3
	0.00	4.0		0.00	5.3
	0.00	4.0		0.00	5.3
	0.00	4.0		0.00	5.3
	0.00	4.0		0.00	5.3
	0.00	4.0		0.00	5.3
	0.00	4.0		0.00	5.3
	0.00	4.0		0.00	5.3
	0.00	4.0		0.00	5.3
Fi	0.68	60.0	Fi	0.61	60.0
TOTAL	0.85		TOTAL	0.78	
U=1/R=	1.176		U=1/R=	1.282	

EXCEL ENGINEERING, INC			
PROJECT:	Gehl Foods - Ammonia Condenser U	DATE:	03/05/18
PROJECT NO.:	1805360		

COOLING COMBINED COEFFICIENTS

WALL(1) TYPE:	G
WALL(2) TYPE:	E
ROOF TYPE (1):	1
ROOF TYPE (2):	0
WALL (3) TYPE:	0

			MAX. CLTD	+ [(78-	80)+(	89 -85)]	X	U	=	CLG. COEFF.
WALL (1)*	NORTH	[	26	+		2]	X	0.034	=	1.0
	EAST	[	55	+		2]	X	0.034	=	1.9
	SOUTH	[	46	+		2]	X	0.034	=	1.6
	WEST	[	72	+		2]	X	0.034	=	2.5
WALL (2)*	NORTH	[	20	+		2]	X	0.266	=	5.9
	EAST	[	38	+		2]	X	0.266	=	10.6
	SOUTH	[	34	+		2]	X	0.266	=	9.6
	WEST	[	43	+		2]	X	0.266	=	12.0
GLASS (1)		[	9	+		2]	X	0.000	=	0.0
GLASS (2)			9							
SKYLIGHT		[	9	+		2]	X	0.000	=	0.0
ROOF (1)**		[	78	+		2]	X	0.121	=	9.7
ROOF (2)**		[	0	+		2]	X	1.282	=	2.6
PARTITION		[	0	+		2]	X	1.176	=	2.4
DOOR		[	9	+		2]	X	0.800	=	8.8
WALL (3)*	NORTH	[	0	+		2]	X	1.176	=	2.4
	EAST	[	0	+		2]	X	1.176	=	2.4
	SOUTH	[	0	+		2]	X	1.176	=	2.4
	WEST	[	0	+		2]	X	1.176	=	2.4

EXCEL ENGINEERING, INC			
PROJECT:	**Gehl Foods - Ammonia Condenser Upgrade**	DATE:	03/05/18
PROJECT NO.:	**1805360**		

HEATING COMBINED COEFFICIENTS

			"U"	X	"T.D."	=	HTG. COEFF.
WALL		(1)	0.034	X	70	=	2.4
WALL		(2)	0.266	X	70	=	18.6
WALL		(3)	1.176	X	70	=	82.4
WALL	BELOW GRADE		1.176	X	0	=	0.0
	PARTITION		1.176	X	0	=	0.0
GLASS		(1)	0.000	X	70	=	0.0
GLASS		(2)	0.000	X	70	=	0.0
SKYLIGHT			0.000	X	70	=	0.0
ROOF		(1)	0.121	X	70	=	8.5
ROOF		(2)	1.282	X	70	=	89.7
EXPOSED FLOOR			1.282	X	70	=	89.7
PERIMETER EDGE LOSS			0.430	X	70	=	30.1
DOOR			0.800	X	70	=	56.0
INFILTRATION (A.C.)				X	70	=	1.3

EXCEL ENGINEERING, INC			
PROJECT:	Gehl Foods - Ammonia Condenser Upgrade	DATE:	3/5/2018
PROJECT NO.:	1805360	SHEET:	OF

SOLAR HEAT GAIN FACTORS

44 DEGREES NORTH LATITUDE

(SHGF X CLF X SC)

		8:00AM					12 NOON					4:00PM				
		SHGF	X CLF	X SC	=	COEFF.	SHGF	X CLF	X SC	=	COEFF.	SHGF	X CLF	X SC	=	COEFF.
N	MAY	36	X 0.49	X	0 =	0.0	36	X 0.76	X	0 =	0.0	36	X 0.79	X	0 =	0.0
	JULY	37	X 0.49	X	0 =	0.0	37	X 0.76	X	0 =	0.0	37	X 0.79	X	0 =	**0.0**
	SEPT	28	X 0.49	X	0 =	0.0	28	X 0.76	X	0 =	0.0	28	X 0.79	X	0 =	0.0
OVERHANG FACTOR																
N						**100**					**100**					**100**
E	MAY	219	X 0.51	X	0 =	**0.0**	219	X 0.42	X	0 =	0.0	219	X 0.26	X	0 =	0.0
	JULY	215	X 0.51	X	0 =	0.0	215	X 0.42	X	0 =	0.0	215	X 0.26	X	0 =	0.0
	SEPT	198	X 0.51	X	0 =	0.0	198	X 0.42	X	0 =	0.0	198	X 0.26	X	0 =	0.0
OVERHANG FACTOR																
E						**0.86**					**100**					**100**
S	MAY	132	X 0.17	X	0 =	0.0	132	X 0.59	X	0 =	0.0	132	X 0.5	X	0 =	0.0
	JULY	128	X 0.17	X	0 =	0.0	128	X 0.59	X	0 =	0.0	128	X 0.5	X	0 =	0.0
	SEPT	211	X 0.17	X	0 =	0.0	211	X 0.59	X	0 =	**0.0**	211	X 0.5	X	0 =	0.0
OVERHANG FACTOR																
S						**1.59**					**1.39**					**1.59**
W	MAY	219	X 0.13	X	0 =	0.0	219	X 0.16	X	0 =	0.0	219	X 0.57	X	0 =	**0.0**
	JULY	215	X 0.13	X	0 =	0.0	215	X 0.16	X	0 =	0.0	215	X 0.57	X	0 =	0.0
	SEPT	198	X 0.13	X	0 =	0.0	198	X 0.16	X	0 =	0.0	198	X 0.57	X	0 =	0.0
OVERHANG FACTOR																
W						**100**					**100**					**0.86**
HORZ...	MAY	257	X 0.28	X	0 =	0.0	257	X 0.66	X	0 =	0.0	257	X 0.67	X	0 =	**0.0**
	JULY	254	X 0.28	X	0 =	0.0	254	X 0.66	X	0 =	0.0	254	X 0.67	X	0 =	0.0
	SEPT	199	X 0.28	X	0 =	0.0	199	X 0.66	X	0 =	0.0	199	X 0.67	X	0 =	0.0

EXCEL ENGINEERING, INC DATE: 03/05/18

PROJECT: **Gehl Foods - Ammonia Condenser Upgrade**

PROJECT NO.: **1805360**

BUILDING INPUT

RM NO	ROOM NAME	IMC 2009 OCCUPANCY CLASSIFICATION	WALL (1) H (FT)	EXPOSURE (FT) N	E	S	W	EXPOSURE AREA (SF) N	E	S	W	WALL (2) H (FT)	EXPOSURE (FT) N	E	S	W	EXPOSURE AREA (SF) N	E	S	W	WALL (3) H (FT)	EXPOSURE (FT) N	E	S	W	EXPOSURE AREA (SF) N	E	S	W
101	Mech Equip Rm	Storage rooms	23	27	48	27	0	430	1066	324	0	11	3.5	3.5	27	0	39	39	297	0	0	0	0	0	0	0	0	0	0
-	-		0	0	0	0	0	0	0	0	0	0	0	0	0	0	0	0	0	0	0	0	0	0	0	0	0	0	0
-	-		0	0	0	0	0	0	0	0	0	0	0	0	0	0	0	0	0	0	0	0	0	0	0	0	0	0	0
-	-		0	0	0	0	0	0	0	0	0	0	0	0	0	0	0	0	0	0	0	0	0	0	0	0	0	0	0
-	-		0	0	0	0	0	0	0	0	0	0	0	0	0	0	0	0	0	0	0	0	0	0	0	0	0	0	0
-	-		0	0	0	0	0	0	0	0	0	0	0	0	0	0	0	0	0	0	0	0	0	0	0	0	0	0	0
-	-		0	0	0	0	0	0	0	0	0	0	0	0	0	0	0	0	0	0	0	0	0	0	0	0	0	0	0
-	-		0	0	0	0	0	0	0	0	0	0	0	0	0	0	0	0	0	0	0	0	0	0	0	0	0	0	0
-	-		0	0	0	0	0	0	0	0	0	0	0	0	0	0	0	0	0	0	0	0	0	0	0	0	0	0	0
-	-		0	0	0	0	0	0	0	0	0	0	0	0	0	0	0	0	0	0	0	0	0	0	0	0	0	0	0
-	-		0	0	0	0	0	0	0	0	0	0	0	0	0	0	0	0	0	0	0	0	0	0	0	0	0	0	0
	- TOTALS	- -						430	1066	324	0						39	39	297	0						0	0	0	0

EXCEL ENGINEERING, INC DATE: 03/05/18

PROJECT: **Gehl Foods - Ammonia Condenser Upgrade**

PROJECT NO.: 1805360

BUILDING INPUT

RM	GLASS (1)									DOOR																	SKYLIGHT		
	H	EXPOSURE (FT)				AREA (INCL DOOR GLASS- SF)				HEIGHT	WIDTH				OPAQUE EXP AREA (SF)				GLASS IN DOOR AREA					DOOR GLASS EXP AREA				L	W	AREA
NO	(FT)	N	E	S	W	N	E	S	W	(FT)	N	E	S	W	N	E	S	W	HGT	N	E	S	W	N	E	S	W	(FT)	(FT)	(SF)
101	0	0	0	0	0	0	0	0	0	13	12	0	0	0	152.4	0	0	0	0	0	0	0	0	0	0	0	0	0	0	0
-	0	0	0	0	0	0	0	0	0	0	0	0	0	0	0	0	0	0	0	0	0	0	0	0	0	0	0	0	0	0
-	0	0	0	0	0	0	0	0	0	0	0	0	0	0	0	0	0	0	0	0	0	0	0	0	0	0	0	0	0	0
-	0	0	0	0	0	0	0	0	0	0	0	0	0	0	0	0	0	0	0	0	0	0	0	0	0	0	0	0	0	0
-	0	0	0	0	0	0	0	0	0	0	0	0	0	0	0	0	0	0	0	0	0	0	0	0	0	0	0	0	0	0
-	0	0	0	0	0	0	0	0	0	0	0	0	0	0	0	0	0	0	0	0	0	0	0	0	0	0	0	0	0	0
-	0	0	0	0	0	0	0	0	0	0	0	0	0	0	0	0	0	0	0	0	0	0	0	0	0	0	0	0	0	0
-	0	0	0	0	0	0	0	0	0	0	0	0	0	0	0	0	0	0	0	0	0	0	0	0	0	0	0	0	0	0
-	0	0	0	0	0	0	0	0	0	0	0	0	0	0	0	0	0	0	0	0	0	0	0	0	0	0	0	0	0	0
-	0	0	0	0	0	0	0	0	0	0	0	0	0	0	0	0	0	0	0	0	0	0	0	0	0	0	0	0	0	0
-	0	0	0	0	0	0	0	0	0	0	0	0	0	0	0	0	0	0	0	0	0	0	0	0	0	0	0	0	0	0
-	0	0	0	0	0	0	0	0	0	0	0	0	0	0	0	0	0	0	0	0	0	0	0	0	0	0	0	0	0	0
						0	0	0	0						152.4	0	0	0						0	0	0	0			0

OTAL DOOR AREA (INCLUDING GLASS) 152.4

EXCEL ENGINEERING, INC DATE: 04/03/18

PROJECT: **Gehl Foods - Ammonia Condenser Upgrade**

PROJECT NO.: 1805360

BUILDING INPUT

RM NO	B.G. WALL L (FT)	B.G. WALL H (FT)	B.G. WALL AREA (SF)	EXPOSED FLR. L (FT)	EXPOSED FLR. W (FT)	EXPOSED FLR. AREA (SF)	PARTITION L (FT)	PARTITION H (FT)	PARTITION AREA (SF)	ROOM INFORMATION FL/CL (FT)	L (FT)	W (FT)	PLENUM 0-1	RF-1 1/0	RF-2 1/0	EDG 1/0	OPEN TO VEST 1/0	INFIL AC	AREA (SF)	VOL. (CF)	ROOF 1 (SF)	ROOF-2 (SF)	AIR REQUIREMENTS # TLT/ HOWE FIXT.	CFM/ FIXT./ HOWE	EA CFM/ SF	ROOM LOADS OCC. #/ 1000 SF	#	OUTSIDE AIR PERSON CFM	AREA CFM/SF	LGHTING W	EQUIPMENT BTUH	W/S.F.	UNIT NUMBER
101	0	0	0	0	0	0	0	0	0	23	0	0	0	1	0	1	1	0.0	1170	26910	1170	0	0	0	0	0	0	0	0.12	1445	0	0	1
-	0	0	0	0	0	0	0	0	0	0	0	0	0	0	0	0	0	0.0	0	0	0	0	0	0	0	0	0	0	0	0	0	0	100
-	0	0	0	0	0	0	0	0	0	0	0	0	0	0	0	0	0	0.0	0	0	0	0	0	0	0	0	0	0	0	0	0	0	100
-	0	0	0	0	0	0	0	0	0	0	0	0	0	0	0	0	0	0.0	0	0	0	0	0	0	0	0	0	0	0	0	0	0	100
-	0	0	0	0	0	0	0	0	0	0	0	0	0	0	0	0	0	0.0	0	0	0	0	0	0	0	0	0	0	0	0	0	0	100
-	0	0	0	0	0	0	0	0	0	0	0	0	0	0	0	0	0	0.0	0	0	0	0	0	0	0	0	0	0	0	0	0	0	100
-	0	0	0	0	0	0	0	0	0	0	0	0	0	0	0	0	0	0.0	0	0	0	0	0	0	0	0	0	0	0	0	0	0	100
-	0	0	0	0	0	0	0	0	0	0	0	0	0	0	0	0	0	0.0	0	0	0	0	0	0	0	0	0	0	0	0	0	0	100
-	0	0	0	0	0	0	0	0	0	0	0	0	0	0	0	0	0	0.0	0	0	0	0	0	0	0	0	0	0	0	0	0	0	100
-	0	0	0	0	0	0	0	0	0	0	0	0	0	0	0	0	0	0.0	0	0	0	0	0	0	0	0	0	0	0	0	0	0	100
-	0	0	0	0	0	0	0	0	0	0	0	0	0	0	0	0	0	0.0	0	0	0	0	0	0	0	0	0	0	0	0	0	0	100
			0			0			0										1170	26910	1170	0											

EXCEL ENGINEERING, INC DATE: 04/03/18

PROJECT: **Gehl Foods - Ammonia Conde** **SUMMARY SHEET**

PROJECT NO.: **1805360**

RM NO	ROOM NAME	OCC #	AREA (SF)	VOL (CF)	HEATLOSS (BTUH)	HEATGAIN (BTUH)	RAD. CAP. (BTUH)	SUPPLY AIR ADJ. CFM MAX.	SUPPLY AIR ADJ. CFM MIN.	SUPPLY AIR HTG CFM	E.A. ADJ. CFM	BOX NO.
101	**Mech Equip Rm**	0	1170	26910	53148	24056	0	0	0	0	0	
-	-	0	0	0	0	0	0	0	0	0	0	
-	-	0	0	0	0	0	0	0	0	0	0	
-	-	0	0	0	0	0	0	0	0	0	0	
-	-	0	0	0	0	0	0	0	0	0	0	
-	-	0	0	0	0	0	0	0	0	0	0	
-	-	0	0	0	0	0	0	0	0	0	0	
-	-	0	0	0	0	0	0	0	0	0	0	
-	-	0	0	0	0	0	0	0	0	0	0	
-	-	0	0	0	0	0	0	0	0	0	0	
-	-	0	0	0	0	0	0	0	0	0	0	
	TOTAL	0	1170	26910	53148	24056	0	0	0	0	0	

EXCEL ENGINEERING, INC DATE: 3/5/2018

PROJECT: **Gehl Foods - Ammonia Condenser Upgrade**

PROJECT NO.: **1805360**

HEAT LOSS CALCULATION

RM NO	ROOM NAME	WALL (1) (BTUH)	WALL (2) (BTUH)	WALL (3) (BTUH)	DOOR (OPAQUE) (BTUH)	GLASS (1) (BTUH)	SKYLIGHT (BTUH)	ROOF (1) (BTUH)	ROOF (2) (BTUH)	ROOF LOAD TO PLENUM (BTUH)	ROOM OPEN TO VESTIBULE (BTUH)	INFIL (BTUH)	EXPOSED FLR (BTUH)	PARTITION (BTUH)	B.G. WALL (BTUH)	EDGE (BTUH)	TOTAL (BTUH)
101	**Mech Equip Rm**	4758	7659	0	9388	0	0	10880	0	0	10000	5960	0	0	0	4503	53148
-	-	0	0	0	0	0	0	0	0	0	0	0	0	0	0	0	0
-	-	0	0	0	0	0	0	0	0	0	0	0	0	0	0	0	0
-	-	0	0	0	0	0	0	0	0	0	0	0	0	0	0	0	0
-	-	0	0	0	0	0	0	0	0	0	0	0	0	0	0	0	0
-	-	0	0	0	0	0	0	0	0	0	0	0	0	0	0	0	0
-	-	0	0	0	0	0	0	0	0	0	0	0	0	0	0	0	0
-	-	0	0	0	0	0	0	0	0	0	0	0	0	0	0	0	0
-	-	0	0	0	0	0	0	0	0	0	0	0	0	0	0	0	0
-	-	0	0	0	0	0	0	0	0	0	0	0	0	0	0	0	0
-	-	0	0	0	0	0	0	0	0	0	0	0	0	0	0	0	0
	TOTAL	4758	7659	0	9388	0	0	10880	0	0		5960	0	0	0	4503	53148

EXCEL ENGINEERING, INC DATE: 3/5/2018

PROJECT: **Gehl Foods - Ammonia Condenser Upgrade**

PROJECT NO.: **1805360**

HEAT GAIN CALCULATION

RM NO	ROOM NAME	WALL (1) N (BTUH)	WALL (1) E (BTUH)	WALL (1) S (BTUH)	WALL (1) W (BTUH)	WALL (2) N (BTUH)	WALL (2) E (BTUH)	WALL (2) S (BTUH)	WALL (2) W (BTUH)	WALL (3) N (BTUH)	WALL (3) E (BTUH)	WALL (3) S (BTUH)	WALL (3) W (BTUH)	DOOR OPAQUE (BTUH)	GLASS & SKYLIGHT SOLAR (BTUH)	GLASS (T) (BTUH)	SKYLIGHT (T) (BTUH)	PART. (BTUH)	ROOF-1 (BTUH)	ROOF-2 (BTUH)	ROOF LOAD TO PLENUM (BTUH)	LIGHTS (BTUH)	PEOPLE 250 (BTUH)	EQUIP. (BTUH)	TOTAL (BTUH)
101	Mech Equip Rm	409	2062	528	0	225	410	2844	0	0	0	0	0	1341	0	0	0	0	11304	0	0	4933	0	0	24056
-	-	0	0	0	0	0	0	0	0	0	0	0	0	0	0	0	0	0	0	0	0	0	0	0	0
-	-	0	0	0	0	0	0	0	0	0	0	0	0	0	0	0	0	0	0	0	0	0	0	0	0
-	-	0	0	0	0	0	0	0	0	0	0	0	0	0	0	0	0	0	0	0	0	0	0	0	0
-	-	0	0	0	0	0	0	0	0	0	0	0	0	0	0	0	0	0	0	0	0	0	0	0	0
-	-	0	0	0	0	0	0	0	0	0	0	0	0	0	0	0	0	0	0	0	0	0	0	0	0
-	-	0	0	0	0	0	0	0	0	0	0	0	0	0	0	0	0	0	0	0	0	0	0	0	0
-	-	0	0	0	0	0	0	0	0	0	0	0	0	0	0	0	0	0	0	0	0	0	0	0	0
-	-	0	0	0	0	0	0	0	0	0	0	0	0	0	0	0	0	0	0	0	0	0	0	0	0
-	-	0	0	0	0	0	0	0	0	0	0	0	0	0	0	0	0	0	0	0	0	0	0	0	0
-	-	0	0	0	0	0	0	0	0	0	0	0	0	0	0	0	0	0	0	0	0	0	0	0	0
-	-	0	0	0	0	0	0	0	0	0	0	0	0	0	0	0	0	0	0	0	0	0	0	0	0
		409	2062	528	0	225	410	2844	0	0	0	0	0	1341	0	0	0	0	11304	0	0	4933	0	0	24056

EXCEL ENGINEERING, INC

PROJECT: **Gehl Foods - Ammonia Condenser Upgrade**

PROJECT NO.: **1805360**

GLASS PEAK ROOM CALCULATION

RM NO	ROOM NAME	MAY 8:00 N (BTUH)	E (BTUH)	S (BTUH)	W (BTUH)	HORIZ (BTUH)	GLASS TOTAL (BTUH)	LIGHTS (BTUH)	PEOPLE (BTUH)	TOTAL (BTUH)	SEPT 12:00 N (BTUH)	E (BTUH)	S (BTUH)	W (BTUH)	HORIZ (BTUH)	GLASS TOTAL (BTUH)	LIGHTS (BTUH)	PEOPLE (BTUH)	TOTAL (BTUH)
101	**Mech Equip Rr**	0	0	0	0	0	0	3256	0	3256	0	0	0	0	0	0	3650	0	3650
-	-	0	0	0	0	0	0	0	0	0	0	0	0	0	0	0	0	0	0
-	-	0	0	0	0	0	0	0	0	0	0	0	0	0	0	0	0	0	0
-	-	0	0	0	0	0	0	0	0	0	0	0	0	0	0	0	0	0	0
-	-	0	0	0	0	0	0	0	0	0	0	0	0	0	0	0	0	0	0
-	-	0	0	0	0	0	0	0	0	0	0	0	0	0	0	0	0	0	0
-	-	0	0	0	0	0	0	0	0	0	0	0	0	0	0	0	0	0	0
-	-	0	0	0	0	0	0	0	0	0	0	0	0	0	0	0	0	0	0
-	-	0	0	0	0	0	0	0	0	0	0	0	0	0	0	0	0	0	0
-	-	0	0	0	0	0	0	0	0	0	0	0	0	0	0	0	0	0	0
-	-	0	0	0	0	0	0	0	0	0	0	0	0	0	0	0	0	0	0
		0	0	0	0	0	0	3256	0	3256	0	0	0	0	0	0	3650	0	3650

DATE: 3/5/2018

GLASS PEAK ROOM CALCULATION

MAY 4:00					GLASS				SEPT 4:00					GLASS					
N (BTUH)	E (BTUH)	S (BTUH)	W (BTUH)	HORIZ (BTUH)	TOTAL (BTUH)	LIGHTS (BTUH)	PEOPLE (BTUH)	TOTAL (BTUH)	N (BTUH)	E (BTUH)	S (BTUH)	W (BTUH)	HORIZ (BTUH)	TOTAL (BTUH)	LIGHTS (BTUH)	PEOPLE (BTUH)	TOTAL (BTUH)	**MAXIMUM TOTAL**	**MAXIMUM GLASS**
0	0	0	0	0	0	3798	0	3798	0	0	0	0	0	0	3798	0	3798	3798	0
0	0	0	0	0	0	0	0	0	0	0	0	0	0	0	0	0	0	0	0
0	0	0	0	0	0	0	0	0	0	0	0	0	0	0	0	0	0	0	0
0	0	0	0	0	0	0	0	0	0	0	0	0	0	0	0	0	0	0	0
0	0	0	0	0	0	0	0	0	0	0	0	0	0	0	0	0	0	0	0
0	0	0	0	0	0	0	0	0	0	0	0	0	0	0	0	0	0	0	0
0	0	0	0	0	0	0	0	0	0	0	0	0	0	0	0	0	0	0	0
0	0	0	0	0	0	0	0	0	0	0	0	0	0	0	0	0	0	0	0
0	0	0	0	0	0	0	0	0	0	0	0	0	0	0	0	0	0	0	0
0	0	0	0	0	0	0	0	0	0	0	0	0	0	0	0	0	0	0	0
0	0	0	0	0	0	0	0	0	0	0	0	0	0	0	0	0	0	0	0
0	0	0	0	0	0	3798	0	3798	0	0	0	0	0	0	3798	0	3798		0

TABLE OF CONTENTS

Division	Section Title	Pages
DIVISION 0 – PROCUREMENT AND CONTRACTING REQUIREMENTS		
00 31 32	GEOTECHNICAL EXPLORATION REPORT	
DIVISION 2 – EXISTING CONDITIONS		
02 41 19	SELECTIVE DEMOLITION	
DIVISION 3 - CONCRETE		
03 30 00	CAST-IN-PLACE CONCRETE	
DIVISION 4 - MASONRY		
04 20 00	UNIT MASONRY	
DIVISION 5 - METALS		
05 12 00	STRUCTURAL STEEL	
05 31 00	STEEL DECK	
05 50 00	METAL FABRICATIONS	
DIVISION 6 - WOOD AND PLASTICS		
06 10 00	ROUGH CARPENTRY	
DIVISION 7 - THERMAL AND MOISTURE PROTECTION		
07 11 13	BITUMINOUS DAMPROOFING	
07 26 00	UNDER SLAB VAPOR BARRIER	
07 41 20	METAL WALL PANELS	
07 53 23	ADHERED EPDM ROOFING SYSTEM	
07 92 00	JOINT SEALANTS	
DIVISION 8 - DOORS AND WINDOWS		
08 11 10	STANDARD STEEL DOORS AND FRAMES	
08 36 14	SECTIONAL OVERHEAD DOORS	
DIVISION 9 - FINISHES		
09 91 10	EXTERIOR PAINTING	
09 91 20	INTERIOR PAINTING	
DIVISION 31 – EARTH WORK		
31 10 00	SITE CLEARING	
31 20 00	EARTH MOVING	
31 63 25	MICRO PILES	
DIVISION 32 – EXTERIOR IMPROVEMENTS		
32 31 13	CHAIN LINK FENCES AND GATES	

END TABLE OF CONTENTS

Wisconsin Testing Laboratories LLC

Geotechnical Investigations
Testing & Inspection of
Soil, Rock, Aggregates,
Concrete, Asphalt,
Mortar and Grout

March 31, 2016

Mr. Steven Buck
Senior Project Engineer
Gehl Foods, Inc.
N116 W15970 Main Street
Germantown, WI 53022

Re: Test Borings
Proposed Ammonia Refrigeration Expansion
N116 W15970 Main Street
Germantown, Wisconsin
(WTL# 0317-16-001)

Dear Mr. Buck:

This is a report of three (3) test borings made recently at the above-referenced facility per your request and as authorized under Purchase Order No. 603876. The purpose of the borings was to investigate the subsurface conditions in an area where an addition is to be made to the existing facility, from which an evaluation could be made relative to foundation design. The following report presents our findings and recommendations.

Project Description

The addition would be located on the east side of the existing building and would be 50.2 ft. by 27 ft. in area. The area in which the addition is to be located has an asphalt surface and is relatively level. The addition would be a single-story structure with a concrete floor slab near existing grade. Construction would be concrete block to a few feet above grade and insulated metal panels above.

A steel frame to support an evaporative condenser would be installed on top of the structure. The catalog operating weight of the condenser is 115,440 lbs. A second condenser unit may eventually be installed. A water sump tank for the condensers having a capacity of about 7,500 gal. would be located inside of the structure. Eventually, additional ammonia compressors may be located in the addition. The compressors would weigh roughly 10,000 lbs. each.

W140 N5886 Lilly Road / Menomonee Falls, Wisconsin 53051-6046 / (262) 252-3300 / Fax (262) 252-5373

Field and Laboratory Investigations

The test borings were made with a truck-mounted CME Model 45 drill rig at the approximate locations indicated on the attached plan. Soil sampling was performed in the test borings at 2.5-ft. intervals by the standard penetration test procedure (ASTM D-1586). The samples were preliminarily classified in the field by the drill foreman and field boring logs were prepared. Portions of the samples were placed in labeled containers and returned to our laboratory for further inspection, laboratory test assignment, and final classification by a geotechnical engineer. Boring logs showing descriptions of the major strata encountered, along with the field and laboratory test data, are included herewith.

The laboratory-testing program consisted of natural moisture determinations, calibrated penetrometer tests and grain-size analysis tests. The results of the grain-size analysis tests are presented on data/curve sheets, located at the rear of the boring logs. All other laboratory test results are included on the boring logs.

Subsurface Conditions Encountered

Auger refusal on apparent bedrock was encountered at depths ranging from approximately 10 to 15 ft. below the existing asphalt pavement. The apparent bedrock is overlain by fill consisting of silty clay and sand/gravel, as well as boulders and/or concrete rubble. The standard penetration test results (N values) obtained in the soil overburden indicate variable conditions, ranging from medium stiff and loose to very stiff and dense. Samples of the silty clay fill exhibited moisture contents of 10.5 to 25.1 percent and estimated unconfined compressive strengths ranging from 0.7 to 4.0 tons/sq.ft.

Free groundwater was encountered in Borings 1 and 3 at about 11 to 12 ft. below existing grade. At completion of drilling, groundwater was present in Borings 1 and 3 at 9 ft. below existing grade. The borings were immediately backfilled per DNR regulations.

Further details regarding the subsurface materials and conditions encountered can be obtained from the boring logs included herewith. Also included are insert sheets describing our field sampling procedures and our soil classification system.

Discussion, Opinions and Recommendations

The existing fill that extends to apparent bedrock at 10 to 15 ft. below the existing asphalt is variable in condition and should not be relied upon for foundation support, in our opinion. Any lightly loaded floor sections can be supported on the existing fill, however. Simply excavating to the bedrock and backfilling the excavations with engineered material to design grade does not appear to be a feasible option, since the groundwater level appears to be only about 9 ft. below existing grade, and deep excavations could have detrimental effects on the adjacent existing structures. Certain deep foundation options such a helical piers, drilled shafts and driven piles also do not appear to be feasible, due to the presence of objects such as boulders and/or concrete rubble, and other factors.

One foundation type that does appear to be feasible is the micropile. A micropile (also referred to as a mini-pile) is a type of deep foundation consisting of a small-diameter drilled hole that is filled with grout. Micropiles typically include a central steel reinforcement member and often include a steel casing. An experienced micropile contractor should be consulted for more information.

Since the site is a former quarry, it is anticipated that the bedrock that exists below the fill is not highly weathered. Micropiles bearing in competent dolomitic limestone bedrock can be conservatively designed for an allowable end bearing pressure of 30,000 lbs./sq.ft. and an allowable unit shaft resistance (rock socket) of 2,500 lbs./sq.ft. A load test would probably show that significantly higher allowable end bearing and/or shaft resistance values could be used.

Closing

Unused portions of the samples obtained in the test borings will be stored in our laboratory for a period of 30 days and will then be discarded. If other arrangements are desired, please notify our office within this holding period.

If there are any questions, or if we can be of any further assistance, please contact our office. We have appreciated the opportunity to be of service to you on this project.

Respectfully,
WISCONSIN TESTING LABORATORIES, LLC

Jeffrey G. Smith, P.E.
Principal Engineer

Copies (2) Client

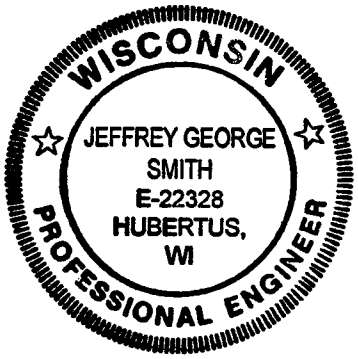

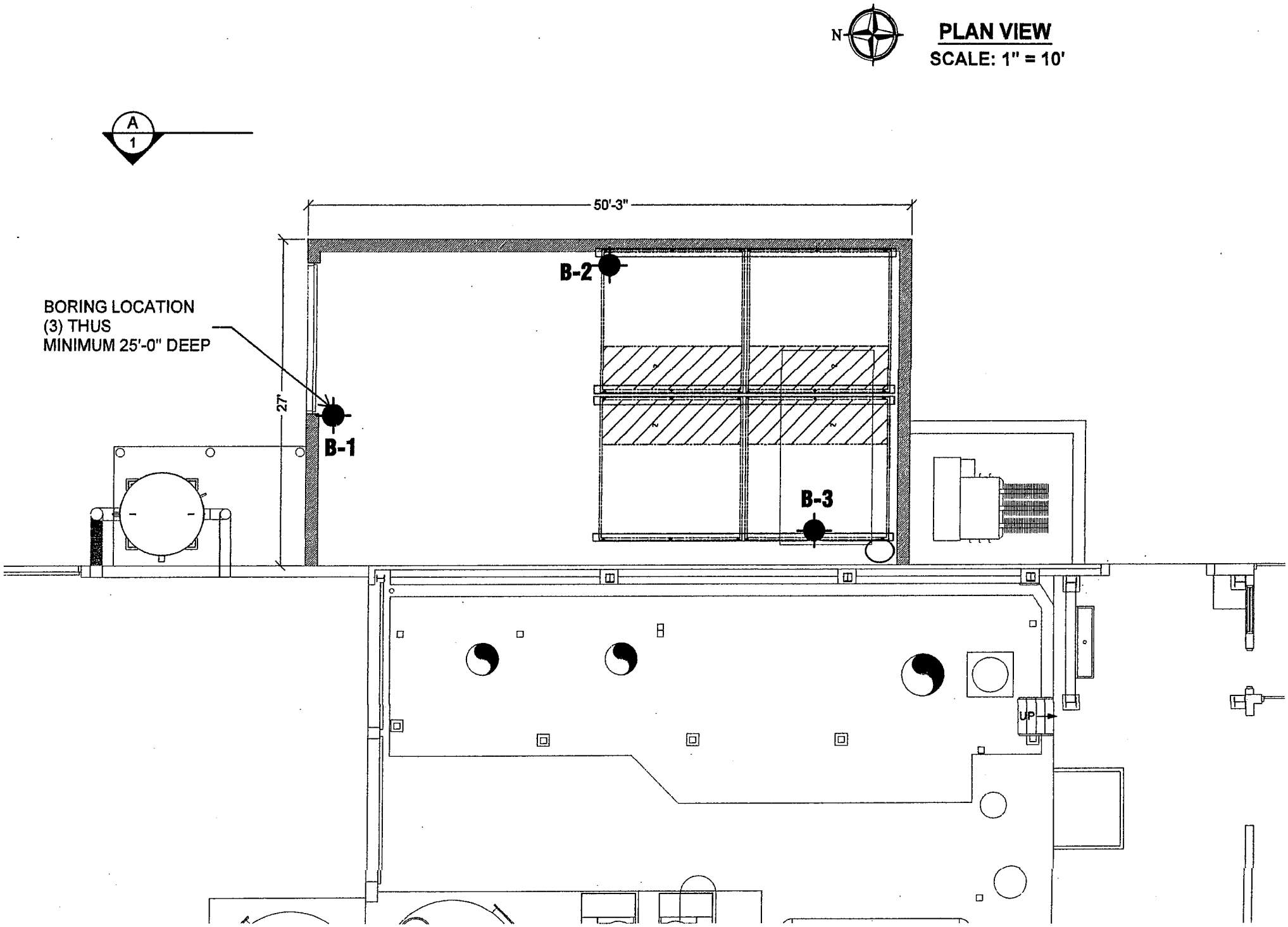
N
PLAN VIEW
SCALE: 1" = 10'
A
1
50'-3"
27'
BORING LOCATION
(3) THUS
MINIMUM 25'-0" DEEP
B-1
B-2
B-3
UP

LOG OF BORING

WISCONSIN TESTING LABORATORIES

PROJECT: Proposed Ammonia Refrigeration Expansion - Main Plant
CLIENT: Gehl Foods, Inc.
LOCATION: N116 W15970 Main Street
Germantown, Wisconsin

JOB NO.: 0317-16-001
BORING NO.: 1
GROUND ELEVATION:
BORING LOCATION: See Diagram

BORING STARTED 3/28/2016
BORING COMPLETED 3/28/2016
TOTAL BORING DEPTH 12'-6"

Groundwater: During Drilling 12'
Completion of Drilling 9'
24 Hours After Completion

Notes and Laboratory Test Results					Sample No	Recovery	Blow Count	Depth Feet	Sample	Material Classification	Elevation
M_c %	D_d pcf	O_c %	Q_u tsf	Q_p tsf							
										ASPHALT (4")	
					1	14"	5			BASE COURSE OF DARK GRAYISH BROWN SILTY SAND AND GRAVEL moist. (12")	
25.1				0.7			3				
10.5				3.0			5			FILL OF MEDIUM STIFF TO STIFF DARK GRAYISH BROWN AND YELLOWISH BROWN SILTY CLAY moist, little to some fine to coarse sand, little to some fine to large gravel, some cobbles/boulders and/or concrete rubble.	
					2	12"	5				
13.3				1.5			3				
							7	5			
Poor Recovery					3	3"	4				
							13				
							7				
No Recovery					4	0"	3				
							5				
							2	10			
										FILL OF MEDIUM DENSE GRAYISH BROWN FINE TO COARSE SAND AND FINE TO LARGE GRAVEL wet, trace silt	
					5	16"	27				
							13				
							50/1"				
										END OF BORING	
Auger refusal at 12.5' depth											
								15			
								20			
								25			

LOGGED BY Josh C. CHECKED BY Soils Engineer CLASSIFICATION SYSTEM WTL

METHOD OF DRILLING 3-1/4 in. I.D. hollow stem auger casing with carbide toothed finger bit used for entire depth of boring

MACHINE MODEL Truck-mounted CME 45

SPT HAMMER TYPE High-efficiency automatic

SPLIT-SPOON TUBE AUGER WASH

LOG OF BORING

WISCONSIN TESTING LABORATORIES

PROJECT: Proposed Ammonia Refrigeration Expansion - Main Plant
CLIENT: Gehl Foods, Inc.
LOCATION: N116 W15970 Main Street
Germantown, Wisconsin

JOB NO.: 0317-16-001
BORING NO.: 2
GROUND ELEVATION:
BORING LOCATION: See Diagram

BORING STARTED 3/28/2016
BORING COMPLETED 3/28/2016
TOTAL BORING DEPTH 10'

Groundwater: During Drilling None
Completion of Drilling None
24 Hours After Completion

Notes and Laboratory Test Results					Sample No	Recovery	Blow Count	Depth Feet	Sample	Material Classification	Elevation
M_c %	D_d pcf	O_c %	Q_u tsf	Q_p tsf							
										ASPHALT (3")	
					1	16"	3			BASE COURSE OF DARK GRAYISH BROWN SILTY SAND AND GRAVEL moist. (3")	
14.5				4.0			5				
							8			FILL OF STIFF TO VERY STIFF DARK GRAY AND YELLOWISH BROWN SILTY CLAY moist, little fine to coarse sand, little fine to coarse gravel.	
					2	14"	17				
							23			FILL OF MEDIUM DENSE TO DENSE YELLOWISH BROWN AND GRAY SILTY FINE TO COARSE SAND AND FINE TO LARGE GRAVEL moist, few cobbles/boulders and/or concrete rubble, few pockets of silty clay.	
							15	5			
					3	12"	16				
12.6							18				
							28				
					4	4"	10				
							50/3"				
								10		END OF BORING	
Auger refusal at 10' depth											
								15			
								20			
								25			

LOGGED BY Josh C. CHECKED BY Soils Engineer CLASSIFICATION SYSTEM WTL

METHOD OF DRILLING 3-1/4 in. I.D. hollow stem auger casing with carbide toothed finger bit used for entire depth of boring

MACHINE MODEL Truck-mounted CME 45
SPT HAMMER TYPE High-efficiency automatic

SPLIT-SPOON | TUBE | A AUGER | W WASH

LOG OF BORING

WISCONSIN TESTING LABORATORIES

PROJECT: Proposed Ammonia Refrigeration Expansion - Main Plant
CLIENT: Gehl Foods, Inc.
LOCATION: N116 W15970 Main Street
Germantown, Wisconsin

JOB NO.: 0317-16-001
BORING NO.: 3
GROUND ELEVATION:
BORING LOCATION: See Diagram

BORING STARTED 3/28/2016
BORING COMPLETED 3/28/2016
TOTAL BORING DEPTH 15'

Groundwater: During Drilling 11'
Completion of Drilling 9'
24 Hours After Completion

Notes and Laboratory Test Results					Sample No	Recovery	Blow Count	Depth Feet	Sample	Material Classification	Elevation
M_c %	D_d pcf	O_c %	Q_u tsf	Q_p tsf							
										ASPHALT (8")	
					1	2"	6 6 5			BASE COURSE OF DARK GRAYISH BROWN SILTY SAND AND GRAVEL moist. (12")	
					2	12"	6 2 2	5		FILL OF LOOSE YELLOWISH BROWN, GRAYISH BROWN AND DARK BROWN FINE TO COARSE SAND moist to wet, some fine to large gravel, trace to little silt, some cobbles/boulders and/or concrete rubble, few pockets of silty clay.	
					3	12"	4 4 3				
					4	12"	5 4 3	10			
					5	14"	2 2 2				
					6	3"	4 2 50/3"	15		END OF BORING	
Auger refusal at 15' depth											
								20			
								25			

LOGGED BY Josh C. CHECKED BY Soils Engineer CLASSIFICATION SYSTEM WTL

METHOD OF DRILLING 3-1/4 in. I.D. hollow stem auger casing with carbide toothed finger bit used for entire depth of boring

MACHINE MODEL Truck-mounted CME 45

SPT HAMMER TYPE High-efficiency automatic

SPLIT-SPOON TUBE A AUGER W WASH

GRAIN SIZE ANALYSIS TEST RESULTS

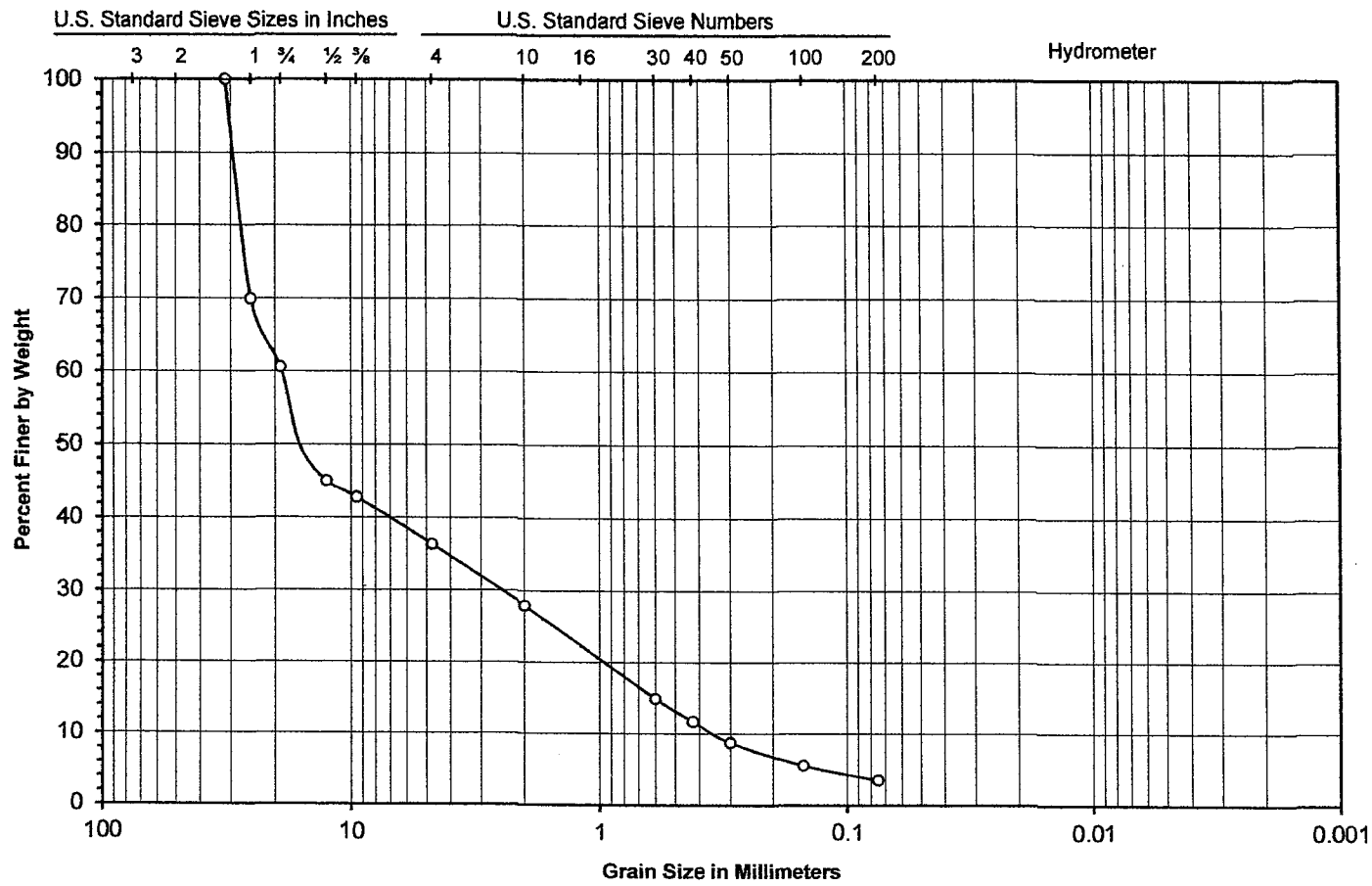

UNIFIED	GRAVEL	SAND	SILT AND CLAY
AASHTO	GRAVEL	SAND	SILT AND CLAY

SIEVE SIZE	PERCENT FINER	SPEC
125 mm (5")	-	-
100 mm (4")	-	-
90 mm (3½")	-	-
75 mm (3")	-	-
63 mm (2½")	-	-
50 mm (2")	-	-
37.5 mm (1½")	-	-
31.5 mm (1¼")	100.0	-
25.0 mm (1")	70.0	-
19.0 mm (3/4")	60.6	-
12.5 mm (1/2")	45.0	-
9.5 mm (3/8")	42.8	-
4.75 mm (# 4)	36.4	-
2.36 mm (# 8)	-	-
2.00 mm (# 10)	27.9	-
1.18 mm (# 16)	-	-
600 µm (# 30)	14.9	-
425 µm (# 40)	11.7	-
300 µm (# 50)	8.7	-
180 µm (# 80)	-	-
150 µm (# 100)	5.6	-
75 µm (# 200)	3.5	-

SAMPLE ID: B-1, S-5, 11'-12.5'

Description/Classification

Fine to Coarse Sand and Fine to Large Gravel, trace silt (GP)

Coefficients

D_{60} = 19 mm
D_{30} = 2.5 mm
D_{10} = 0.35 mm
C_u = 54.05
C_c = 0.94

Other Test Data

Moisture Content = percent
Dry Unit Weight = lbs./cu.ft.
Hydraulic Conductivity = cm./sec.
Liquid Limit =
Plastic Limit =

Wisconsin Testing Laboratories LLC

Job No. 0317-16-001

AMMONIA REFRIGERATION EXPANSION
N116 W15970 Main Street
Germantown, Wisconsin

For Gehl Foods, Inc.

March 31, 2016

GRAIN SIZE ANALYSIS TEST RESULTS

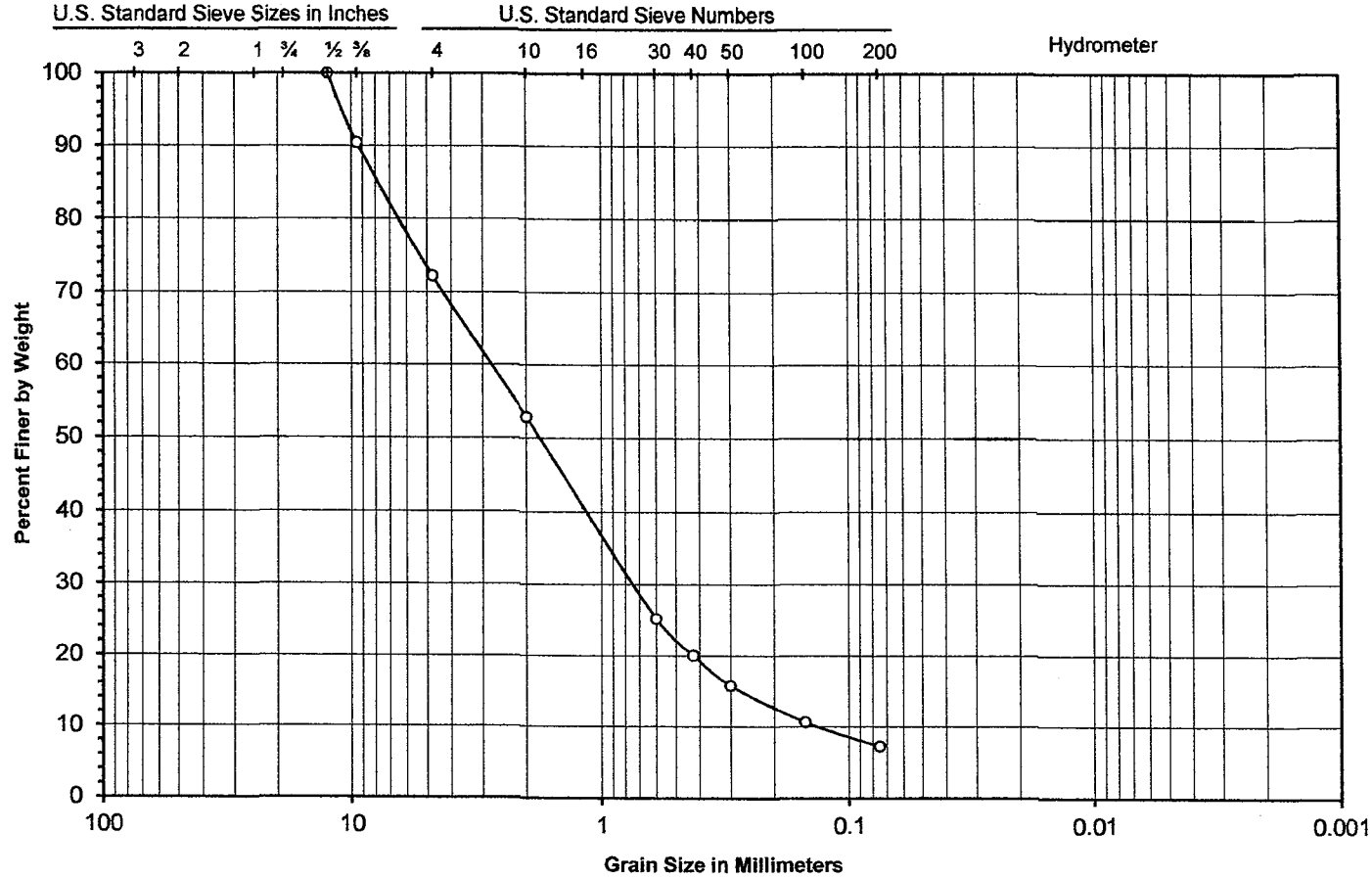

UNIFIED	GRAVEL	SAND	SILT AND CLAY
AASHTO	GRAVEL	SAND	SILT AND CLAY

SIEVE SIZE	PERCENT FINER	SPEC
125 mm (5")	-	-
100 mm (4")	-	-
90 mm (3½")	-	-
75 mm (3")	-	-
63 mm (2½")	-	-
50 mm (2")	-	-
37.5 mm (1½")	-	-
31.5 mm (1¼")	-	-
25.0 mm (1")	-	-
19.0 mm (3/4")	-	-
12.5 mm (1/2")	100.0	-
9.5 mm (3/8")	90.5	-
4.75 mm (# 4)	72.3	-
2.36 mm (# 8)	-	-
2.00 mm (# 10)	52.8	-
1.18 mm (# 16)	-	-
600 µm (# 30)	25.2	-
425 µm (# 40)	20.1	-
300 µm (# 50)	15.8	-
180 µm (# 80)	-	-
150 µm (# 100)	10.7	-
75 µm (# 200)	7.3	-

SAMPLE ID: B-3, S-5, 11'-12.5'

Description/Classification

Fine to Coarse Sand, some fine to medium gravel, trace silt (SW-SM)

Coefficients

D_{60} = 2.8 mm
D_{30} = 0.74 mm
D_{10} = 0.13 mm
C_u = 21.01
C_c = 1.52

Other Test Data

Moisture Content = percent
Dry Unit Weight = lbs./cu.ft.
Hydraulic Conductivity = cm./sec.
Liquid Limit =
Plastic Limit =

Wisconsin Testing Laboratories LLC

Job No. 0317-16-001

AMMONIA REFRIGERATION EXPANSION
N116 W15970 Main Street
Germantown, Wisconsin

For Gehl Foods, Inc.

March 31, 2016

WISCONSIN TESTING LABORATORIES

FIELD EXPLORATION STANDARD SAMPLING PROCEDURES

Soil sampling was performed in general accordance with ASTM method D-1586. Using this method, a 140 lb. weight (hammer) free-falling a distance of 30 in. is used to drive a 2 in. O.D. by 1-3/8 in. I.D. split-barrel sampler into the soil. The sampler is first driven 6 in. into the soil for seating purposes. The sampler is then driven an additional 12 in., and the number of blows required to drive the sampler the final 12 in. is known as the penetration resistance or "N" value. The number of hammer blows used in making the test is reported on the drill logs for all three 6 in. increments of penetration (example: 7/8/9 where 8 + 9 = 17 is the standard penetration resistance or "N" value). "N" values are used to indicate relative densities of cohesionless (sand and gravel soils) and to a lesser degree the consistencies of cohesive soils.

All soil samples recovered from the test borings were preliminarily classified in the field by the drill crew. Representative portions of the samples were enclosed in glass jars, labeled and returned to the laboratory for further examination and final classification by a geotechnical engineer.

Please note that the boring logs show the subsurface conditions at the dates, locations and depths indicated, and it is not warranted that they are representative of subsurface conditions at other locations and times, and to greater depths than penetrated by the borings. It should also be noted that water level determinations made in clean, cohesionless soil are generally quite reliable, whereas water level determinations made in cohesive soils may not indicate true static water levels even after several days or weeks observation.

WISCONSIN TESTING LABORATORIES

Field Classification System for Soil Exploration

Non Cohesive Soils
(Silt, Sand, Gravel and Combinations)

Relative Density	Blows Per Ft.
Very Loose	5 or less
Loose	6 to 10
Firm	11 to 15
Medium Dense	16 to 30.
Dense	31 to 50
Very Dense	51 or more

Relative Proportions

Descriptive Term	Percent
Trace	1 to 10
Little	11 to 20
Some	21 to 35
And	36 to 50

Cohesive Soils
(Clay, Silt and Combinations)

Consistency	Blows Per Foot
Very Soft	3 or less
Soft	4 to 5
Medium Stiff	6 to 10
Stiff	11 to 15
Very Stiff	16 to 30
Hard	31 or more

Laboratory Test Symbols

M_c: Natural Moisture Content
D_d: Natural Dry Density
O_c: Organic Content
Q_u: RIMAC Unconfined Compressive Strength
Q_p: Calibrated Penetrometer

Particle Size Identification

Boulders	- 8 inch diameter or more	
Cobbles	- 3 to 8 inch diameter	
Gravel	- Coarse	- Large 1 to 3 inch
	- Medium	- 1/2 to 1 inch
	- Fine	- 4.76mm to 1/2 inch
Sand	- Coarse	- 2.0mm to 4.76mm (dia. of pencil lead)
	- Medium	- 0.42mm to 2.0mm (dia. of broom straw)
	- Fine	- 0.074mm to 0.42mm (dia. of human hair)
Silt		- 0.002mm to 0.074mm (Cannot see particles)

Plasticity

Degree of Plasticity	Plasticity Index
None to Slight	0 to 4
Slight	5 to 7
Medium	8 to 22
High to Very High	Over 22

Classification on logs are made by visual inspection in the absence of classification tests.

Standard Penetration Test - A 2.0 in. O.D. by 1-3/8 in. I.D. sampler (split-spoon) is driven a distance of 1.5 ft. with a 140 lb. hammer free falling a distance of 30.0 in. The number of hammer blows required for each 6.0 in. of penetration are recorded on the boring log (Example - 6/8/9). The Standard Penetration Resistance (N value) can be obtained by adding the last two figures (i.e. N = 8+9 = 17).

Strata Changes - In the column "Material Classification" on the boring log, the horizontal lines represent strata changes. A solid line (——) represents an actually observed change, a dashed line (------) represents an estimated change.

Groundwater Observations were made at the times indicated. Porosity of soil strata, weather conditions, site topography, etc., may cause the water levels to vary from those indicated on the logs.

Interbedded Strata Descriptions

Very thin seams	- Paper thin to 1/8 in. thick
Thin seams	- 1/8 in. to 1 in. thick
Medium seams	- 1 in. to 6 in. thick
Large seams	- 6 in. to 12 in. thick

SECTION 02 41 19 – SELECTIVE DEMOLITION

PART 1 - GENERAL

1.1 RELATED DOCUMENTS

A. Drawings and general provisions of the Contract, including General and Supplementary Conditions and Division 01 Specification Sections, apply to this section.

1.2 SUMMARY

A. This sections requires the selective removal and subsequent off-site disposal of but not limited to the following.
   1. Obtain all required permits and inspections and comply with all local ordinances for selective demolition work.
   2. Portions of building structure indicated on drawings and as required to accommodate new construction.
   3. Demolition and removal of selected portion of the building and site elements.
   4. After completion of work under this section, the Contractor shall assume the responsibility for the maintenance of all temporary partitions, enclosures and security enclosures and the removal and disposal upon completion of the project.

1.3 RELATED REQUIREMENTS

A. Division 01 Section “Summary” for restrictions on use of the premises, Owner occupancy requirements and phasing requirements.

1.4 DEFINITIONS

A. Remove: Detach items from existing construction and dispose of them off-site unless indicated to be salvaged or reinstalled.

B. Existing to Remain: Leave existing items that are not to be removed and that are not otherwise indicated to be salvaged or reinstalled.

1.5 MATERIAL OWNERSHIP

A. Unless otherwise indicated, demolition waste becomes property of the Contractor.

1.6 INFORMATIONAL SUBMITTALS

A. Proposed Protection Measures: Submit report, including, drawings, that indicate the measures proposed for protecting individuals and property, for environmental protection, for dust control and for noise control. Indicate proposed locations and construction of barriers.

B. Schedule of Selective Demolition Activities: Indicate the following:

1. Submit a detailed schedule indicating proposed sequence of selective demolition and removal work, with starting and ending dates for each activity to the Owner and General Contractor for review to start work.

2. Interruption of utility services. Indicate how logn utility services will be interrupted.

3. Coordination of Owner's continuing occupancy of portions fo existing building and of Owner's partial occupancy of completed work.

4. Schedule shall consider that Owner will occupy portion of the building immediately adjacent to areas of work.

1.7 PROTECTIONS

A. Provide temporary barricades and other forms of protection as required to protect Owner's personnel and general public from injury due to selective demolition work.

1.8 UTILITY SERVICES

A. Maintain existing utilities indicated to remain. Keep in service and protect against damage during demolition operations.

1.9 FIELD CONDITIONS

A. Notify Engineer of discrepancies between existing conditions and drawings before proceeding with selective demolition.

B. Hazardous Materials: It is not expected that hazardous materials will be encountered in the work. If suspected hazardous materials are encountered, do not disturb; immediately notify Owner and Engineer. Hazardous materials will be removed by Owner under a separate contract.

1.10 ENVIRONMENTAL CONTROLS

A. Use water sprinkling, temporary enclosures, and other suitable methods to limit dust and dirt rising and scattering in air to lowest practical level.

B. Comply with governing regulation pertaining to environmental protection.

PART 2 - PRODUCTS

2.1 PERFORMANCE REQUIREMENTS

A. Regulatory Requirements: Comply with governing EPA notification regulations before beginning selective demolition. Comply with hauling and disposal regulations of authorities having jurisdictions

PART 3 - EXECUTION

3.1 EXAMINATION

A. Inspection: Prior to commencement of selective demolition work, inspect areas in which work will be performed. Photograph existing conditions of structure surface, equipment, that could be damaged resulting from selective demolition work.

B. Verify that hazardous materials have been remediated before proceeding with building demolition operations.

3.2 PREPARTIONS

A. Provide interior and exterior shoring, bracing or support to prevent movement, settlement or collapse of structures to be demolished.

1. Cease operations and notify Owner's Representative, Engineer and Contractor immediately if safety of structure appears to be endangered.
2. Repair or replace, as approved by Engineer and Owner's Representative adjacent work damaged or displaced by demolition work.

B. Erect and maintain dust-proof partitions and closures as required to prevent the spread of dust or fumes to occupied parts of the building.

3.3 UTILIT SERVICES AND MECHANICAL / ELECTRICAL SYSTEMS

A. Existing Services to Remain: Maintain services indicated to remain and protect them against damage.

B. Existing Services to be Removed: Locate, identify, disconnect, and seal or cap off utility services and mechanical /electrical systems serving areas to be selectively demolished.

3.4 PROTCTION

A. Temporary Protection: Provide temporary barricades and other protection required to prevent injury to people and damage to facilities.

1. Provide temporary weather protection, during interval between selective demolition and building enclosure.
2. Cover and protect equipment that has not been removed.

B. Remove temporary barricades and protections where hazards no longer exist.

3.5 SELECTIVE DEMOLITION

A. Demolish and remove existing construction only to the extent required by new construction and as indicated.

B. Neatly cut openings and holes plum, square and true to dimension required. Use cutting methods least likely to damage construction to remain or adjoining construction.

C. Demolish concrete and masonry in small section. Cut concrete and masonry in junctures with construction to remain using power-driven masonry saw or hand tools.

D. Demolish foundations walls to a depth of not less than 8 inches below existing ground surface.

3.6 DISPOSAL OF DEMOLISHED MATERIALS

A. Remove debris, rubbish and other materials resulting from demolition operations from building site. Transport and legally dispose off site or recycle.

B. Burning of removed materials is not permitted on project site.

END OF SECTION 02 41 19

SECTION 03 30 00 - CAST-IN-PLACE CONCRETE

PART 1 - GENERAL

1.1 SUMMARY

A. This Section specifies cast-in place concrete, including formwork, reinforcement, concrete materials, mixture design, placement procedures, and finishes.

B. See Division 31 Section "Earthwork" for drainage fill under slabs-on-grade.

1.2 SUBMITTALS

A. Product Data: For each type of product indicated.

B. Design Mixtures: For each concrete mixture.

C. Shop Drawings: For steel reinforcement.

D. Material test reports.

1.3 QUALITY ASSURANCE

A. Manufacturer Qualifications: A firm experienced in manufacturing ready-mixed concrete products and that complies with ASTM C 94/C 94M requirements for production facilities and equipment.

1. Manufacturer certified according to NRMCA's "Certification of Ready Mixed Concrete Production Facilities."

B. ACI Publications: Comply with the following unless modified by requirements in the Contract Documents:

1. ACI 301, "Specification for Structural Concrete," Sections 1 through 5. ACI 117, "Specifications for Tolerances for Concrete Construction and Materials."

PART 2 - PRODUCTS

2.1 FORM-FACING MATERIALS

A. Smooth-Formed Finished Concrete: Form-facing panels that will provide continuous, true, and smooth concrete surfaces. Furnish in largest practicable sizes to minimize number of joints.

B. Rough-Formed Finished Concrete: Plywood, lumber, metal, or another approved material. Provide lumber dressed on at least two edges and one side for tight fit.

2.2 STEEL REINFORCEMENT

A. Reinforcing Bars: ASTM A 615/A 615M, Grade 60, deformed.

B. Plain-Steel Welded Wire Reinforcement: ASTM A 185, plain, fabricated from as-drawn steel wire into flat sheets.

C. Bar Supports: Bolsters, chairs, spacers, and other devices for spacing, supporting, and fastening reinforcing bars and welded wire reinforcement in place. Manufacture bar supports from steel wire, plastic, or precast concrete according to CRSI's "Manual of Standard Practice."

2.3 CONCRETE MATERIALS

A. Cementitious Material: Use the following cementitious materials, of the same type, brand, and source, throughout Project:

1. Portland Cement: ASTM C 150, Type I, supplement with the following:

   a. Fly Ash: ASTM C 618, Class C.
   b. Ground Granulated Blast-Furnace Slag: ASTM C 989, Grade 100 or 120.

2. Blended Hydraulic Cement: ASTM C 595, Type IP, portland-pozzolan cement.

B. Normal-Weight Aggregates: ASTM C 33, graded, 1 inch nominal maximum coarse-aggregate size.

1. Fine Aggregate: Free of materials with deleterious reactivity to alkali in cement.

C. Water: ASTM C 94/C 94M.

D. Air-Entraining Admixture: ASTM C 260.

E. Chemical Admixtures: Provide admixtures certified by manufacturer to be compatible with other admixtures and that will not contribute water-soluble chloride ions exceeding those permitted in hardened concrete. Do not use calcium chloride or admixtures containing calcium chloride.

1. Water-Reducing Admixture: ASTM C 494/C 494M, Type A.
2. Retarding Admixture: ASTM C 494/C 494M, Type B.
3. Water-Reducing and Retarding Admixture: ASTM C 494/C 494M, Type D.
4. High-Range, Water-Reducing Admixture: ASTM C 494/C 494M, Type F.
5. High-Range, Water-Reducing and Retarding Admixture: ASTM C 494/C 494M, Type G.
6. Plasticizing and Retarding Admixture: ASTM C 1017/C 1017M, Type II.

F. Synthetic Fiber: fibrillated polypropylene fibers engineered and designed for use in concrete pavement, complying with ASTM C 1116, Type III, ½ to 1-1/2 inches long.

2.4 CURING MATERIALS

A. Evaporation Retarder: Waterborne, monomolecular film forming, manufactured for application to fresh concrete.

B. Moisture-Retaining Cover: ASTM C 171, polyethylene film or white burlap-polyethylene sheet.

C. Water: Potable.

2.5 RELATED MATERIALS

A. Expansion- and Isolation-Joint-Filler Strips: ASTM D 1751, asphalt-saturated cellulosic fiber.

2.6 CONCRETE MIXTURES

A. Prepare design mixtures for each type and strength of concrete, proportioned on the basis of laboratory trial mixture or field test data, or both, according to ACI 301.

B. Proportion normal-weight concrete mixture as follows:

1. Mix Design Schedule:

Class	Name	Min Strength (psi)	Max Agg (inches)	Max Slump (inches)	Min Cement (lbs/cu yd)	Max Water/ Cement Ratio
1	Footings	3000	1-1/2	4	423	0.50
2	Cols/Piers	4000	3/4	5	564	0.48
3	Walls/Bms/Slab	4000	3/4	4	541	0.46
4	Ground Slabs	4000	1 1/2	4	541	0.46
5	Bond Beams	3000	3/8	5	517	0.55
6	Exterior Slabs	3500	3/4	3	517	0.48

Notes:

a. Minimum cement contents listed in schedule are based on use of water reducing agents specified.

b. Mixes without water reducing agents shall require a twelve percent increase in cement content.

c. Adjust mix designs when material characteristics, job conditions, weather, test results, or other circumstances warrant.

d. Comply with design drawings for design strength of each type and class of concrete.

e. Provide Air Entrained Admixture for all concrete exposed to freezing and thawing. Air entrained concrete mix normal range of air content 5% to 7%.

f. Super Plasticizer Admixture may be used for all concrete at Contractors option.

g. Add fibrous concrete reinforcement to concrete materials at the time concrete is batched, in amounts in accordance with approved submittals for each type of concrete required.

h. Slump tolerance: 3 and 4 inch slump plus 1 inch minus ½ inch, 5 inch slump plus or minus 1 inch.

i. Slump test shall be taken prior to the addition of high range water reducing agent and placement of concrete.

2.7 FABRICATING REINFORCEMENT

A. Fabricate steel reinforcement according to CRSI's "Manual of Standard Practice."

2.8 CONCRETE MIXING

A. Ready-Mixed Concrete: Measure, batch, mix, and deliver concrete according to ASTM C 94/C 94M and furnish batch ticket information.

1. When air temperature is between 85 and 90 deg F, reduce mixing and delivery time from 1-1/2 hours to 75 minutes; when air temperature is above 90 deg F, reduce mixing and delivery time to 60 minutes.

2.9 OTHER MATERIALS

A. Liquid Densifier and Sealer: Penetrating concrete sealer of siliconate polymers which increases abrasion resistance and reduces the surface absorption of liquids. Apply two coats at the rate of 250 sq. ft./gal.as per manufacture’s recommendations. Provide sealer manufactured by one of the following or approved equal.

1. EUCO Diamond Hard, The Euclid Chemical Company.
2. A-H 3 Way Sealer, Anti-Hydro Company.

B. Joint Materials: Floor joint filler shall be a two component, semi-rigid epoxy for filling control and construction joints, complying with ACI 302, Section 4.10. Provide joint filler manufactured by one of the following or approved equal.

1. EUCO 700,The Euclid Chemical Company.
2. Sikadur 51, Sika Company.
3. MH-80, Metzger-McGuire.

C. Non-Shrink Grout: Premixed compound with non-metallic aggregate, cement, water reducing and plasticizing agents; capable of minimum compressive strength of 3000 psi.

PART 3 - EXECUTION

3.1 FORMWORK

A. Design, erect, shore, brace, and maintain formwork according to ACI 301 to support vertical, lateral, static, and dynamic loads, and construction loads that might be applied, until structure can support such loads.

B. Construct formwork so concrete members and structures are of size, shape, alignment, elevation, and position indicated, within tolerance limits of ACI 117.

C. Chamfer exterior corners and edges of permanently exposed concrete ¾ inch.

3.2 EMBEDDED ITEMS

A. Place and secure anchorage devices and other embedded items required for adjoining work that is attached to or supported by cast-in-place concrete. Use setting drawings, templates, diagrams, instructions, and directions furnished with items to be embedded.

3.3 STEEL REINFORCEMENT

A. General: Comply with CRSI's "Manual of Standard Practice" for placing reinforcement.

3.4 JOINTS

A. General: Construct joints true to line with faces perpendicular to surface plane of concrete.

B. Construction Joints: Install so strength and appearance of concrete are not impaired, at locations indicated or as approved by Architect.

C. Contraction Joints in Slabs-on-Grade: Form weakened-plane contraction joints, sectioning concrete into areas as indicated. Construct contraction joints for a depth equal to at least one-fourth of concrete thickness as follows:

1. Grooved Joints: Form contraction joints after initial floating by grooving and finishing each edge of joint to a radius of 1/8 inch. Repeat grooving of contraction joints after applying surface finishes. Eliminate groover tool marks on concrete surfaces.
2. Sawed Joints: Form contraction joints with power saws equipped with shatterproof abrasive or diamond-rimmed blades. Cut 1/8 inch wide joints into concrete when cutting action will not tear, abrade, or otherwise damage surface and before concrete develops random contraction cracks.

D. Isolation Joints in Slabs-on-Grade: After removing formwork, install joint-filler strips at slab junctions with vertical surfaces, such as column pedestals, foundation walls, grade beams, and other locations, as indicated.

3.5 CONCRETE PLACEMENT

A. Before placing concrete, verify that installation of formwork, reinforcement, and embedded items is complete and that required inspections have been performed.

B. Deposit concrete continuously in one layer or in horizontal layers of such thickness that no new concrete will be placed on concrete that has hardened enough to cause seams or planes of weakness. If a section cannot be placed continuously, provide construction joints as indicated. Deposit concrete to avoid segregation.

1. Consolidate placed concrete with mechanical vibrating equipment according to ACI 301.

C. Cold-Weather Placement: Comply with ACI 306.1.

D. Hot-Weather Placement: Comply with ACI 301.

3.6 FINISHING FORMED SURFACES

A. Rough-Formed Finish: As-cast concrete texture imparted by form-facing material with tie holes and defects repaired and patched. Remove fins and other projections that exceed specified limits on formed-surface irregularities.

1. Apply to concrete surfaces not exposed to public view.

B. Smooth-Formed Finish: As-cast concrete texture imparted by form-facing material, arranged in an orderly and symmetrical manner with a minimum of seams. Repair and patch tie holes and defects. Remove fins and other projections that exceed specified limits on formed-surface irregularities.

1. Apply to concrete surfaces exposed to public view.

C. Related Unformed Surfaces: At tops of walls, horizontal offsets, and similar unformed surfaces adjacent to formed surfaces, strike off smooth and finish with a texture matching adjacent formed surfaces. Continue final surface treatment of formed surfaces uniformly across adjacent unformed surfaces, unless otherwise indicated.

3.7 FINISHING FLOORS AND SLABS

A. General: Comply with ACI 302.1R recommendations for screeding, restraightening, and finishing operations for concrete surfaces. Do not wet concrete surfaces.

B. Scratch Finish: While still plastic, texture concrete surface that has been screeded and bull-floated or darbied. Use stiff brushes, brooms, or rakes to produce a profile amplitude of 1/8 inch in 1 direction.

1. Apply scratch finish to surfaces support tanks exposed to weather.

C. Float Finish: Consolidate surface with power-driven floats or by hand floating if area is small or inaccessible to power driven floats. Restraighten, cut down high spots, and fill low spots.

Repeat float passes and restraightening until surface is left with a uniform, smooth, granular texture.

1. Apply float finish to surfaces to receive trowel finish.

D. Trowel Finish: After applying float finish, apply first troweling and consolidate concrete by hand or power-driven trowel. Continue troweling passes and restraighten until surface is free of trowel marks and uniform in texture and appearance. Grind smooth any surface defects that would telegraph through applied coatings or floor coverings.

1. Apply a trowel finish to surfaces supporting interior tanks or equipment.

E. Trowel and Fine-Broom Finish: While concrete is still plastic, slightly scarify surface with a fine broom.

1. Apply trowel and fine-broom finish to surfaces of interior concrete exposed to view. Comply with flatness and levelness tolerances for trowel finished floor surfaces.

F. Broom Finish: Apply a broom finish to exterior concrete platforms, walk-ways and apron slabs.

3.8 CONCRETE PROTECTING AND CURING

A. General: Protect freshly placed concrete from premature drying and excessive cold or hot temperatures. Comply with ACI 306.1 for cold-weather protection and ACI 301 for hot-weather protection during curing.

B. Cure concrete according to ACI 308.1, by one or a combination of the following methods:

1. Moisture Curing: Keep surfaces continuously moist for not less than seven days.
2. Moisture-Retaining-Cover Curing: Cover concrete surfaces with moisture-retaining cover for curing concrete, placed in widest practicable width, with sides and ends lapped at least 12 inches, and sealed by waterproof tape or adhesive. Cure for not less than seven days. Immediately repair any holes or tears during curing period using cover material and waterproof tape.

3.9 CONCRETE SURFACE REPAIRS

A. Defective Concrete: Repair and patch defective areas when approved by Architect. Remove and replace concrete that cannot be repaired and patched to Architect's approval.

3.10 FIELD QUALITY CONTROL

A. Testing and Inspecting: The Contractor shall engage a qualified independent testing and inspecting agency to perform field tests and inspections and prepare test reports.

1. Testing Services: Tests shall be performed according to ACI 301.

B. Concrete Tests: Testing of composite samples of fresh concrete obtained according to ASTM C 172 will be performed according to the following requirements:

1. Testing Frequency: Obtain one composite sample for each day's pour of each concrete mixture exceeding 5 cu. yd., but less than 25 cu. yd., plus one set for each additional 50 cu. yd., or fraction thereof.
2. Slump: ASTM C 143/C 143M; one t est at point of placement for each composite sample, but not less than one test for each day's pour of each concrete mixture. Perform additional tests when concrete consistency appears to change.
3. Compression Test Specimens: ASTM C 31/C 31M; Cast and laboratory cure two sets of two standard cylinder specimens for each composite sample. Cast and field cure two sets of two standard cylinder specimens for each composite sample.
4. Compressive Strength Tests: ASTM C 31/C31M; test one set of two laboratory cured specimens at 7 days and one set of two specimens at 28 days. Test one set of two field cured specimens at 7 days and one set of two specimens at 28 days.

END OF SECTION 03 30 00

SECTION 04 20 00 – UNIT MASONRY

PART 1 - GENERAL

1.1 RELATED DOCUMENTS

A. Drawings and general provisions of the Contract, including General and Supplementary Conditions and Division 1 Specification Sections, apply to this Section.

1.2 SUMMARY

A. This Section includes unit masonry assemblies consisting of the following:

1. Concrete masonry units.
2. Mortar and grout.
3. Reinforcing steel.
4. Masonry joint reinforcement.
5. Ties and anchors.
6. Embedded flashing.
7. Miscellaneous masonry accessories.
8. Insulation.

B. Products furnished, but not installed, under this Section include the following:

1. Division 3 Section "Cast-in-Place Concrete" Dovetail slots for masonry anchors.
2. Division 5 Section "Structural Steel." Adjustable masonry anchors for connecting to structural frame.

C. Products installed, but not furnished, under this Section include the following:

1. Division 5 Section "Metal Fabrications." Steel lintels and shelf angles for unit masonry.
2. Division 8 Section "Steel Doors and Frames." Hollow-metal frames in unit masonry openings.

1.3 DEFINITIONS

A. Reinforced Masonry: Masonry containing reinforcing steel in grouted cells.

1.4 SUBMITTALS

A. Product Data: For each different masonry unit, accessory, and other manufactured product specified.

B. Shop Drawings: Show fabrication and installation details for the following:

1. Reinforcing Steel: Detail bending, lap length and placement of unit masonry reinforcing bars. Comply with ACI 315, "Details and Detailing of Concrete Reinforcement".

2. Fabricated Flashing: Detail corner units, end-dam units, and other special applications.

C. Samples for Initial Selection: For the following:

1. Unit masonry Samples in small-scale form showing the full range of colors and textures available for each different exposed masonry unit required.
2. Colored mortar Samples showing the full range of colors available.

D. Samples for Verification: For the following:

1. Full-size units for each different exposed masonry unit required, showing the full range of exposed colors, textures, and dimensions to be expected in the completed construction.
2. Colored mortar Samples for each color required, showing the full range of colors expected in the finished construction. Make samples using the same sand and mortar ingredients to be used on Project.
3. Weep vents in color to match mortar color.

E. Material Test Reports: From a qualified testing agency indicating and interpreting test results of the following for compliance with requirements indicated:

1.5 QUALITY ASSURANCE

A. Source Limitations for Masonry Units: Obtain exposed masonry units of a uniform texture and color, or a uniform blend within the ranges accepted for these characteristics, through one source from a single manufacturer for each product required.

B. Source Limitations for Mortar Materials: Obtain mortar ingredients of a uniform quality, including color for exposed masonry, from one manufacturer for each cementitious component and from one source or producer for each aggregate.

C. Fire-Resistance Ratings: Where indicated, provide materials and construction identical to those of assemblies with fire-resistance ratings determined per ASTM E 119 by a testing and inspecting agency, by equivalent concrete masonry thickness, or by another means, as acceptable to authorities having jurisdiction.

1.6 DELIVERY, STORAGE, AND HANDLING

A. Store masonry units on elevated platforms in a dry location. If units are not stored in an enclosed location, cover tops and sides of stacks with waterproof sheeting, securely tied. If units become wet, do not install until they are dry.

B. Store cementitious materials on elevated platforms, under cover, and in a dry location. Do not use cementitious materials that have become damp.

C. Store aggregates where grading and other required characteristics can be maintained and contamination avoided.

D. Deliver preblended, dry mortar mix in moisture-resistant containers designed for lifting and emptying into dispensing silo. Store preblended, dry mortar mix in delivery containers on elevated platforms, under cover, and in a dry location or in a metal dispensing silo with weatherproof cover.

E. Store masonry accessories, including metal items, to prevent corrosion and accumulation of dirt and oil.

1.7 PROJECT CONDITIONS

A. Protection of Masonry: During construction, cover tops of walls, projections, and sills with waterproof sheeting at end of each day's work. Cover partially completed masonry when construction is not in progress.

1. Extend cover a minimum of 24 inches down both sides and hold cover securely in place.
2. Where one wythe of multiwythe masonry walls is completed in advance of other wythes, secure cover a minimum of 24 inches down face next to unconstructed wythe and hold cover in place.

B. Stain Prevention: Prevent grout, mortar, and soil from staining the face of masonry to be left exposed or painted. Immediately remove grout, mortar, and soil that come in contact with such masonry.

1. Protect base of walls from rain-splashed mud and from mortar splatter by coverings spread on ground and over wall surface.
2. Protect sills, ledges, and projections from mortar droppings.
3. Protect surfaces of window and door frames, as well as similar products with painted and integral finishes, from mortar droppings.
4. Turn scaffold boards near the wall on edge at the end of each day to prevent rain from splashing mortar and dirt onto completed masonry.

C. Cold-Weather Requirements: Do not use frozen materials or materials mixed or coated with ice or frost. Do not build on frozen substrates. Remove and replace unit masonry damaged by frost or by freezing conditions. Comply with cold-weather construction requirements contained in ACI 530.1/ASCE 6/TMS 602.

1. Cold-Weather Cleaning: Use liquid cleaning methods only when air temperature is 40 deg F and above and will remain so until masonry has dried, but not less than 7 days after completing cleaning.

D. Hot-Weather Requirements: Protect unit masonry work when temperature and humidity conditions produce excessive evaporation of water from mortar and grout. Provide artificial shade and wind breaks and use cooled materials as required. Comply with hot-weather construction requirements contained in ACI 530.1/ASCE 6/TMS 602.

1. When ambient temperature exceeds 100 deg F, or 90 deg F with a wind velocity greater than 8 mph, do not spread mortar beds more than 48 inches ahead of masonry. Set masonry units within one minute of spreading mortar.

PART 2 - PRODUCTS

2.1 CONCRETE MASONRY UNITS

A. General: Provide shapes indicated and as follows:

1. Provide special shapes for lintels, corners, jambs, sash, control joints, headers, bonding, and other special conditions.

B. Concrete Masonry Units: ASTM C 90 and as follows:

1. Unit Compressive Strength: Provide units with minimum average net-area compressive strength of 2,000 psi.
2. Provide Type II, non-moisture-controlled units.
3. Size (Width): Manufactured to the following dimensions:

a. 4 inches nominal; 3-5/8 inches actual.
b. 6 inches nominal; 5-5/8 inches actual.
c. 8 inches nominal; 7-5/8 inches actual.
d. 10 inches nominal; 9-5/8 inches actual.
e. 12 inches nominal; 11-5/8 inches actual.

4. Exposed Exterior Faces: Smooth face units to match existing. Manufacturer's standard color and texture, unless otherwise indicated.

a. Where units are to be left exposed, provide color and texture matching the existing units.

5. Integral Water Repellent: Provide cavity wall units made with liquid polymeric, integral water-repellent admixture that does not reduce flexural bond strength. Units made with integral water repellent, when tested as a wall assembly made with mortar containing integral water-repellent manufacturer's mortar additive according to ASTM E 514, with test period extended to 24 hours, show no visible water or leaks on the back of the test specimen.

a. Products: Subject to compliance with requirements, provide one of the following:

1) Dry-Block; W. R. Grace & Co., Construction Products Division.

2.2 MORTAR AND GROUT MATERIALS

A. Portland Cement-Lime Mix: Packaged blend of Portland cement complying with ASTM C 150, Type I and Type III, and hydrated lime complying with ASTM C 207.

B. Mortar Cement: ASTM C 1329

1. For pigmented mortar, use a colored cement formulation as required to produce the color indicated or, if not indicated, as selected from manufacturer's standard formulations.

a. Pigments shall not exceed 10 percent of portland cement by weight for mineral oxides nor 2 percent for carbon black.

C. Aggregate for Mortar: ASTM C 144; except for joints less than 1/4 inch thick, use aggregate graded with 100 percent passing the No. 16 sieve.

1. Colored-Mortar Aggregates: Natural-colored sand or ground marble, granite, or other sound stone; of color necessary to produce required mortar color.

D. Aggregate for Grout: ASTM C 404.

E. Cold-Weather Admixture: Not permitted

F. Water-Repellent Admixture: Liquid water-repellent mortar admixture intended for use with concrete masonry units, containing integral water repellent by same manufacturer.

G. Water: Potable.

H. Products: Subject to compliance with requirements, provide one of the following:

1. Colored Portland Cement-Lime Mix:

a. Eaglebond; Blue Circle Cement.
b. Color Mortar Blend; Glen-Gery Corporation.
c. Rainbow Mortamix Custom Color Cement/Lime; Holnam, Inc.
d. Centurion Colorbond PL; Lafarge Corporation.
e. Lehigh Custom Color Portland/Lime; Lehigh Portland Cement Co.
f. Riverton Portland Cement Lime Custom Color; Riverton Corporation (The).

2. Water-Repellent Admixture:

a. Dry-Block Mortar Admixture; W. R. Grace & Co., Construction Products Division.

2.4 REINFORCING STEEL

A. Uncoated Steel Reinforcing Bars: ASTM A 615/A 615M; Grade 60.

2.5 MASONRY JOINT REINFORCEMENT

A. General: ASTM A 951 and as follows:

1. Hot-dip galvanized, carbon-steel wire for both interior and exterior walls.

a. Provide custom, multi wythe, ladder type reinforcing for exterior walls.

2. Wire Size for Side Rods: W1.7 or 0.148-inch diameter.
3. Wire Size for Cross Rods: W1.7 or 0.148-inch diameter.
4. Provide in lengths of not less than 10 feet, with prefabricated corner and tee units where indicated.

B. For single-wythe masonry, provide ladder type with single pair of side rods and cross rods spaced not more than 16 inches o.c.

C. For multi-wythe masonry, provide types as follows: Adjustable two-piece ladder type back up wall and pintle type veneer ties. Back up wythe reinforcement to be ladder type with one 3/16” diameter side rod at each face shell and 9 gauge cross ties. Veneer wythe reinforcement to be double eye rod anchors and double pintle ties formed of 3/16” diameter rods, equal to Hohmann and Barnard "270 Ladder Style” adjustable joint reinforcement with eyes and pintles. Install anchor system manufacturers instructions.

2.6 TIES AND ANCHORS, GENERAL

A. General: Provide ties and anchors, specified in subsequent articles, made from materials that comply with this Article, unless otherwise indicated.

B. Hot-Dip Galvanized Carbon-Steel Wire: ASTM A 82; with ASTM A 153, Class B-2 coating.

C. Galvanized Steel Sheet: ASTM A 653/A 653M, G60, commercial-quality, steel sheet zinc coated by hot-dip process on continuous lines before fabrication.

D. Stainless-Steel Sheet: ASTM A 666, Type 304 or 316.

E. Steel Plates, Shapes, and Bars: ASTM A 36/A 36M.

2.7 BENT WIRE TIES

A. General: Rectangular units with closed ends and not less than 4 inches wide. Z-shaped ties with ends bent 90 degrees to provide hooks not less than 2 inches long may be used for masonry constructed from solid units or hollow units laid with cells horizontal.

1. Where wythes are of different materials, use adjustable ties composed of 2 parts; 1 with pintles, the other with eyes; with maximum misalignment of 1-1/4 inches.

B. Wire: Fabricate from 3/16-inch diameter, hot-dip galvanized steel wire. Mill galvanized wire ties may be used in interior walls where humidity does not exceed 75 percent.

2.8 ADJUSTABLE ANCHORS FOR CONNECTING TO STEEL FRAME

A. General: Provide two-piece assemblies that allow vertical or horizontal adjustment but resist tension and compression forces perpendicular to plane of wall.

1. Anchor Section: Crimped 1/4-inch- diameter, hot-dip galvanized steel wire anchor section for welding to steel.
2. Tie Section: Triangular-shaped wire tie, sized to extend within 1 inch of masonry face, made from 0.25-inch diameter, hot-dip galvanized steel wire.

2.9 RIGID ANCHORS

A. General: Fabricate from steel bars as follows:

1. 1-1/2 inches wide by 1/4 inch thick by 24 inches long, with ends turned up 2 inches or with cross pins.
2. Finish: Hot-dip galvanized to comply with ASTM A 153.

2.10 ADJUSTABLE MASONRY-VENEER ANCHORS

A. General: Provide two-piece assemblies that allow vertical or horizontal adjustment but resist tension and compression forces perpendicular to plane of wall, for attachment over sheathing to wood or metal studs, and as follows:

1. Structural Performance Characteristics: Capable of withstanding a 100-lbf load in both tension and compression without deforming or developing play in excess of 0.05 inch.

B. Screw-Attached, Masonry-Veneer Anchors: Units consisting of a wire tie section and a metal anchor section complying with the following requirements:

1. Anchor Section: Sheet metal plate with screw holes top and bottom and with raised rib-stiffened strap stamped into center to provide a slot between strap and plate for connection of wire tie.
2. Wire Tie Section: Triangular shaped wire tie sized to extend at least halfway through veneer but with at least 5/8-inch cover on outside face.
3. Fabricate sheet metal anchor sections and other sheet metal parts from 0.0677-inch- thick, steel sheet, galvanized after fabrication
4. Fabricate wire tie sections from 0.1875-inch diameter, hot-dip galvanized steel wire.

C. Available Products: Subject to compliance with requirements, products that may be incorporated into the Work include, but are not limited to, the following:

1. Screw-Attached, Masonry-Veneer Anchors:

a. D/A 210 with D/A 700-708; Dur-O-Wal, Inc.

2. Organic-Polymer-Coated, Steel Drill Screws:

a. Dril-Flex; Elco Industries, Inc.
b. Traxx; ITW-Buildex.

2.11 MISCELLANEOUS ANCHORS

A. Anchor Bolts: Steel bolts complying with ASTM A 307, Grade A; with ASTM A 563 hex nuts and, where indicated, flat washers; hot-dip galvanized to comply with ASTM A 153, Class C; of diameter and length indicated and in the following configurations:

1. Non-headed bolts, bent in manner indicated.

B. Post-installed Anchors: Anchors as described below, with capability to sustain, without failure, load imposed within factors of safety indicated, as determined by testing per ASTM E 488, conducted by a qualified independent testing agency.

1. Type: Expansion anchors.
2. Corrosion Protection: Carbon-steel components zinc plated to comply with ASTM B 633, Class Fe/Zn 5 (5 microns) for Class SC 1 service condition (mild).
3. Corrosion Protection: Stainless-steel components complying with ASTM F 593 and ASTM F 594, Alloy Group 1 or 2 for bolts and nuts; ASTM A 666 or ASTM A 276, Type 304 or 316, for anchors.
4. For Postinstalled Anchors in Concrete: Capability to sustain, without failure, a load equal to four times the loads imposed.
5. For Postinstalled Anchors in Grouted Masonry Units: Capability to sustain, without failure, a load equal to six times the loads imposed. Insert other kinds of anchors as required.

2.12 EMBEDDED FLASHING MATERIALS

A. Metal Flashing: Provide stainless steel drip edge in conjunction with flexible rubberized through wall flashing. Fabricate from the following metal complying with requirements specified below:

1. Stainless Steel: 26 gauge, AISI Type 304.

2. Fabricate metal expansion-joint strips from sheet metal indicated above, formed to shape indicated.
3. Fabricate metal drip edges from sheet metal indicated above. Extend at least 1 ½ inches into wall and 1/2 inch out from wall, with a hemmed outer edge bent down 30 degrees.

B. Concealed Flashing: For flashing partly exposed to the exterior, use metal flashing specified above. For flashing not exposed to the exterior, use the following, unless otherwise indicated:

1. Rubberized-Asphalt Flashing: Manufacturer's standard composite flashing product consisting of a pliable and highly adhesive rubberized-asphalt compound, bonded to a high-density, cross-laminated polyethylene film to produce an overall thickness of 40 mil.

   a. Provide flashing as a complete system with preformed corners, end dams, other special shapes, and seaming materials; all produced by flashing sheet manufacturer.

C. Adhesives, Primers, and Seam Tapes for Flashings: Flashing manufacturer's standard products or products recommended by the flashing manufacturer for bonding flashing sheets to each other and to substrates.

D. Products: Subject to compliance with requirements, provide one of the following:

1. Metal Flashing: Drip edge

   a. Durowall: Stainless steel, 26 gauge, 3/16” hemmed drip edge.

2. Rubberized-Asphalt Flashing:

   a. Dur-O-Barrier; Dur-O-Wal, Inc.
   b. Perm-A-Barrier Wall Flashing; W. R. Grace & Co., Construction Products Division.
   c. Poly-Barrier Self-Adhering Wall Flashing; Polytite Manufacturing Corp.
   d. Everlastic MF-40; Williams Products, Inc.

2.13 MISCELLANEOUS MASONRY ACCESSORIES

A. Compressible Filler: Premolded filler strips complying with ASTM D 1056, Grade 2A1; compressible up to 35 percent; of width and thickness indicated; formulated from neoprene.

B. Preformed Control-Joint Gaskets: Material as indicated below, designed to fit standard sash block and to maintain lateral stability in masonry wall; size and configuration as indicated.

1. Styrene-Butadiene-Rubber Compound: ASTM D 2000, Designation M2AA-805.

C. Bond-Breaker Strips: Asphalt-saturated, organic roofing felt complying with ASTM D 226, Type I (No. 15 asphalt felt).

D. Plastic Weep Hole/Vent: One-piece, flexible extrusion made from UV-resistant polypropylene copolymer, designed to fill head joint with outside face held back 1/8 inch from exterior face of masonry, in color selected from manufacturer's standard.

E. Cavity Drainage Material: 1-inch thick, free-draining mesh; made from polyethylene strands and shaped to avoid being clogged by mortar droppings.

F. Available Products: Subject to compliance with requirements, cavity drainage materials that may be incorporated into the Work include, but are not limited to, the following:

1. Plastic Weep Hole/Vent Products:

a. Cell Vent; Dur-O-Wal, Inc.

2. Cavity Drainage Products:

a. Mortar Break; Advanced Building Products, Inc.
b. CavClear Masonry Mat; CavClear.
c. Mortar Net; Mortar Net USA, Ltd.
d. Mortar Stop; Polytite Manufacturing Corp. Insert other masonry accessories as required for Project.

2.13 INSULATION

A. Cavity Wall Insulation: Extruded Polystyrene Board Insulation, comply with ASTM D1621 25 psi compressive strength. Thermal performance R value = 6.5 per inch of thickness. Board thickness 2 inches minimum. Board size 16 inches x 96 inches or 24 inches x 96 inches. Fire Resistance: ASTM E84 <25 flame spread - Class A. Install in accordance with manufacturers published installation instructions, applicators must be approved by product manufacture.

1. Insulation Products:

a. Atlas Wall CI Board - EnergyShield PRO
b. Dow - Thermax Sheathing
c. Rmax - ECOMAXci

2.14 MASONRY CLEANERS

A. Job-Mixed Detergent Solution: Solution of 1/2-cup dry measure tri-sodium polyphosphate and 1/2-cup dry measure laundry detergent dissolved in 1 gal. of water.

B. Proprietary Acidic Cleaner: Manufacturer's standard-strength cleaner designed for removing mortar/grout stains, efflorescence, and other new construction stains from new masonry without discoloring or damaging masonry surfaces. Use product expressly approved for intended use by cleaner manufacturer and manufacturer of masonry units being cleaned.

1. Available Products: Subject to compliance with requirements, products that may be used to clean unit masonry surfaces include, but are not limited to, the following:

   a. Cleaners for Red and Light-Colored Brick Not Subject to Metallic Staining with Mortar Not Subject to Bleaching:

      1) 202 New Masonry Detergent; Diedrich Technologies, Inc.
      2) Sure Klean No. 600 Detergent; ProSoCo, Inc.

2.15 MORTAR AND GROUT MIXES

A. General: Do not use admixtures, including pigments, air-entraining agents, accelerators, retarders, water-repellent agents, antifreeze compounds, or other admixtures, unless otherwise indicated.

   1. Do not use calcium chloride in mortar or grout.

B. Preblended, Dry Mortar Mix: Furnish dry mortar ingredients in the form of a preblended mix. Measure quantities by weight to ensure accurate proportions, and thoroughly blend ingredients before delivering to Project site.

C. Mortar for Unit Masonry: Comply with ASTM C 270, Proportion Specification.

   1. Limit cementitious materials in mortar to portland cement, mortar cement, and lime.
   2. For masonry below grade, in contact with earth, and where indicated, use Type M or S.
   3. For reinforced masonry and where indicated, use Type S.
   4. For exterior, above-grade, load-bearing and non-load-bearing walls and parapet walls; for interior load-bearing walls; for interior non-load-bearing partitions; and for other applications where another type is not indicated, use Type N.

D. Pigmented Mortar: Select and proportion pigments with other ingredients to produce color required. Limit pigments to the following percentages of cement content by weight:

   1. For mineral-oxide pigments and portland cement-lime mortar, not more than 10 percent.
   2. Mix to match Architect's sample.

E. Grout for Unit Masonry: Comply with ASTM C 476.

   1. Use grout of type indicated or, if not otherwise indicated, of type (fine or coarse) that will comply with Table 5 of ACI 530.1/ASCE 6/TMS 602 for dimensions of grout spaces and pour height.
   2. Provide grout with a slump of 8 to 11 inches as measured according to ASTM C 143.

PART 3 - EXECUTION

3.1 EXAMINATION

A. Examine conditions, with Installer present, for compliance with requirements for installation tolerances and other conditions affecting performance.

1. Verify that foundations are within tolerances specified.
2. Verify that reinforcing dowels are properly placed.
3. Proceed with installation only after unsatisfactory conditions have been corrected.

B. Before installation, examine rough-in and built-in construction to verify actual locations of piping connections.

3.2 INSTALLATION, GENERAL

A. Thickness: Build single-wythe walls to the actual widths of masonry units, using units of widths indicated.

B. Build chases and recesses to accommodate items specified in this Section and in other Sections of the Specifications.

C. Leave openings for equipment to be installed before completing masonry. After installing equipment, complete masonry to match the construction immediately adjacent to the opening.

D. Cut masonry units with motor-driven saws to provide clean, sharp, unchipped edges. Cut units as required to provide a continuous pattern and to fit adjoining construction. Where possible, use full-size units without cutting. Allow units cut with water-cooled saws to dry before placing, unless wetting of units is specified. Install cut units with cut surfaces and, where possible, cut edges concealed.

E. Select and arrange units for exposed unit masonry to produce a uniform blend of colors and textures.

1. Mix units from several pallets or cubes as they are placed.

F. Wetting of Brick: Wet brick before laying if the initial rate of absorption exceeds 30 g/30 sq. in. per minute when tested per ASTM C 67. Allow units to absorb water so they are damp but not wet at the time of laying.

3.3 CONSTRUCTION TOLERANCES

A. Comply with tolerances in ACI 530.1/ASCE 6/TMS 602 and the following:

B. For conspicuous vertical lines, such as external corners, door jambs, reveals, and expansion and control joints, do not vary from plumb by more than 1/4 inch in 20 feet, nor 1/2 inch maximum.

C. For vertical alignment of exposed head joints, do not vary from plumb by more than 1/4 inch in 10 feet, nor 1/2 inch maximum.

D. For conspicuous horizontal lines, such as exposed lintels, sills, parapets, and reveals, do not vary from level by more than 1/4 inch in 20 feet, nor 1/2 inch maximum.

E. For exposed bed joints, do not vary from thickness indicated by more than plus or minus 1/8 inch, with a maximum thickness limited to 1/2 inch. Do not vary from bed-joint thickness of adjacent courses by more than 1/8 inch.

F. For exposed head joints, do not vary from thickness indicated by more than plus or minus 1/8 inch. Do not vary from adjacent bed-joint and head-joint thicknesses by more than 1/8 inch.

3.4 LAYING MASONRY WALLS

A. Lay out walls in advance for accurate spacing of surface bond patterns with uniform joint thicknesses and for accurate location of openings, movement-type joints, returns, and offsets. Avoid using less-than-half-size units, particularly at corners, jambs, and, where possible, at other locations.

B. Bond Pattern for Exposed Masonry: Lay exposed masonry in the running bond pattern; do not use units with less than nominal 4-inch horizontal face dimensions at corners or jambs.

C. Lay concealed masonry with all units in a wythe in running bond or bonded by lapping not less than 2 inches. Bond and interlock each course of each wythe at corners. Do not use units with less than nominal 4-inch horizontal face dimensions at corners or jambs.

D. Stopping and Resuming Work: In each course, rack back one-half-unit length for one-half running bond or one-third-unit length for one-third running bond; do not tooth. Clean exposed surfaces of set masonry, wet clay masonry units lightly if required, and remove loose masonry units and mortar before laying fresh masonry.

E. Built-in Work: As construction progresses, build in items specified under this and other Sections of the Specifications. Fill in solidly with masonry around built-in items.

F. Fill space between hollow-metal frames and masonry solidly with mortar, unless otherwise indicated.

G. Where built-in items are to be embedded in cores of hollow masonry units, place a layer of metal lath in the joint below and rod mortar or grout into core.

H. Fill cores in hollow concrete masonry units with grout 24 inches under bearing plates, beams, lintels, posts, and similar items, unless otherwise indicated.

I. Fill cores in exterior masonry walls with loose bead insulation.

3.5 MORTAR BEDDING AND JOINTING

A. Lay hollow masonry units as follows:

1. With full mortar coverage on horizontal and vertical face shells.
2. Bed webs in mortar in starting course on footings and in all courses of piers, columns, and pilasters, and where adjacent to cells or cavities to be filled with grout.
3. For starting course on footings where cells are not grouted, spread out full mortar bed, including areas under cells.

B. Lay solid brick-size masonry units with completely filled bed and head joints; butter ends with sufficient mortar to fill head joints and shove into place. Do not deeply furrow bed joints or slush head joints.

1. At cavity walls, bevel beds away from cavity, to minimize mortar protrusions into cavity. As work progresses, trowel mortar fins protruding into cavity flat against the cavity face of the brick.

C. Set stone trim units in full bed of mortar with vertical joints slushed full. Fill dowel, anchor, and similar holes solid. Wet stone-joint surface thoroughly before setting; for soiled stone surfaces, clean bedding and exposed surfaces with fiber brush and soap powder and rinse thoroughly with clear water.

D. Tool exposed joints slightly concave when thumbprint hard, using a jointer larger than the joint thickness, unless otherwise indicated.

E. Cut joints flush for masonry walls to receive plaster or other direct-applied finishes (other than paint), unless otherwise indicated.

3.6 MASONRY JOINT REINFORCEMENT

A. General: Provide continuous masonry joint reinforcement as indicated. Install entire length of longitudinal side rods in mortar with a minimum cover of 5/8 inch on exterior side of walls, 1/2 inch elsewhere. Lap reinforcement a minimum of 6 inches.

1. Space reinforcement not more than 8 inches o.c. in foundation walls and parapet walls.
2. Provide reinforcement not more than 8 inches above and below wall openings and extending 12 inches beyond openings.

   a. Reinforcement above is in addition to continuous reinforcement.

B. Cut or interrupt joint reinforcement at control and expansion joints, unless otherwise indicated.

C. Provide continuity at corners and wall intersections by using prefabricated "L" and "T" sections. Cut and bend reinforcing units as directed by manufacturer for continuity at returns, offsets, column fireproofing, pipe enclosures, and other special conditions.

3.7 ANCHORING MASONRY TO STRUCTURAL MEMBERS

A. Anchor masonry to structural members where masonry abuts or faces structural members to comply with the following:

1. Provide an open space not less than 1 inch in width between masonry and structural member, unless otherwise indicated. Keep open space free of mortar or other rigid materials.
2. Anchor masonry to structural members with flexible anchors embedded in masonry joints and attached to structure.
3. Space anchors as indicated, but not more than 24 inches o.c. vertically and 36 inches o.c. horizontally.

3.8 CONTROL AND EXPANSION JOINTS

A. General: Install control and expansion joints in unit masonry where indicated. Build-in related items as masonry progresses. Do not form a continuous span through movement joints unless provisions are made to prevent in-plane restraint of wall or partition movement.

B. Form control joints in concrete masonry as follows:

1. Fit bond-breaker strips into hollow contour in ends of concrete masonry units on one side of control joint. Fill resultant core with grout and rake joints in exposed faces.

C. Form expansion joints in brick made from clay or shale as follows:

1. Form open joint of width indicated, but not less than 3/8 inch for installation of sealant and backer rod specified in Division 7 Section "Joint Sealants." Keep joint free and clear of mortar.

D. Build in horizontal, pressure-relieving joints where indicated; construct joints by either leaving an air space or inserting a compressible filler of width required for installing sealant and backer rod specified in Division 7 Section "Joint Sealants."

1. Locate horizontal, pressure-relieving joints beneath shelf angles supporting masonry veneer and attached to structure behind masonry veneer.

3.9 LINTELS

A. Install steel lintels where indicated.

B. Provide masonry lintels where shown and where openings of more than 12 inches for brick-size units and 24 inches for block-size units are shown without structural steel or other supporting lintels.

1. Provide prefabricated or built-in-place masonry lintels. Use specially formed bond beam units with reinforcing bars placed as indicated and filled with coarse grout. Cure precast lintels before handling and installing. Temporarily support built-in-place lintels until cured.

C. Provide minimum bearing of 8 inches at each jamb, unless otherwise indicated.

3.10 FLASHING, WEEP HOLES, AND VENTS

A. General: Install embedded flashing and weep holes in masonry at shelf angles, lintels, ledges, other obstructions to downward flow of water in wall, and where indicated.

B. Prepare masonry surfaces so they are smooth and free from projections that could puncture flashing. Unless otherwise indicated, place through-wall flashing on sloping bed of mortar and cover with mortar. Before covering with mortar, seal penetrations in flashing with adhesive, sealant, or tape as recommended by flashing manufacturer.

C. Install flashing as follows:

1. At lintels and shelf angles, extend flashing a minimum of 4 inches into masonry at each end. At heads and sills, extend flashing 4 inches at ends and turn flashing up not less than 2 inches to form a pan.

2. Install metal drip edges beneath flashing at exterior face of wall. Stop flashing 1/2 inch back from outside face of wall and adhere flashing to top of metal drip edge.

D. Install weep holes in the head joints in exterior wythes of the first course of masonry immediately above embedded flashing and as follows:

1. Use plastic weep hole/vents to form weep holes.
2. Space weep holes 24 inches o.c.
3. Place cavity drainage material immediately above flashing in cavities.

E. Install reglets and nailers for flashing and other related construction where they are shown to be built into masonry.

3.11 REINFORCED UNIT MASONRY INSTALLATION

A. Placing Reinforcement: Comply with requirements of ACI 530.1/ASCE 6/TMS 602.

B. Grouting: Do not place grout until entire height of masonry to be grouted has attained sufficient strength to resist grout pressure.

1. Comply with requirements of ACI 530.1/ASCE 6/TMS for cleanouts and for grout placement, including minimum grout space and maximum pour height.

3.12 REPAIRING, POINTING, AND CLEANING

A. Remove and replace masonry units that are loose, chipped, broken, stained, or otherwise damaged or that do not match adjoining units. Install new units to match adjoining units; install in fresh mortar, pointed to eliminate evidence of replacement.

B. Pointing: During the tooling of joints, enlarge voids and holes, except weep holes, and completely fill with mortar. Point up joints, including corners, openings, and adjacent construction, to provide a neat, uniform appearance. Prepare joints for sealant application.

C. In-Progress Cleaning: Clean unit masonry as work progresses by dry brushing to remove mortar fins and smears before tooling joints.

D. Final Cleaning: After mortar is thoroughly set and cured, clean exposed masonry as follows:

1. Remove large mortar particles by hand with wooden paddles and nonmetallic scrape hoes or chisels.
2. Test cleaning methods on sample wall panel; leave one-half of panel uncleaned for comparison purposes. Obtain Architect's approval of sample cleaning before proceeding with cleaning of masonry.
3. Protect adjacent stone and nonmasonry surfaces from contact with cleaner by covering them with polyethylene film, or waterproof masking tape.
4. Wet wall surfaces with water before applying cleaners; remove cleaners promptly by rinsing the surfaces thoroughly with clear water.
5. Clean masonry with a proprietary acidic cleaner applied according to manufacturer's written instructions.
6. Clean concrete masonry by cleaning method indicated in NCMA TEK 8-2 applicable to type of stain on exposed surfaces.

7. Clean limestone units to comply with recommendations in the Indiana Limestone Institute of America's "Indiana Limestone Handbook."

3.13 MASONRY WASTE DISPOSAL

A. Recycling: Unless otherwise indicated, excess masonry materials are Contractor's property. At completion of unit masonry work, remove from Project site.

B. Excess Masonry Waste: Remove excess, clean masonry waste that cannot be used as fill, as described above, and other masonry waste, and legally dispose of off Owner's property.

3.14 FIELD QUALITY CONTROL

A. The Contractor shall retain a Testing Agency to perform testing and inspection by qualified parties as specified herein. Contractor shall permit and facilitate access to the construction site by the Testing Agency, notify Testing Agency in advance of operations to allow for the prescribed testing and inspection to be completed and provide facilities for the sole use of the Testing Agency for safe storage and proper curing of test specimens on the project site.

1. General: Structural Testing and Special Inspection services herein include items required by the 2009 IBC and other items which in the professional judgment of the Structural Engineer of Record, are critical to the integrity of the building structure.
2. Special Inspection of masonry is required during preparation of masonry wall prisms or test specimens, sampling and placing of masonry units, placement of structural reinforcement, cleanout of grout space immediately prior to closing of elements, and during grouting operations.
3. Conventional Testing and Inspection Services specified herein describe those items not specifically required by the IBC, but are considered essential to the proper performance of the building system.
4. Definitions: Special inspectors.

    a. Technical I: Inspector shall be employed by a testing laboratory, under the direct supervision of a Technical III.
    b. Technical III: A civil / structural engineer regularly engaged in this type of work, with a minimum of 4 years experience and licensed in the State in which the Project is located. The licensed engineer shall review and approve all reports.
    c. Structural I: Graduate civil/structural engineer with experience in the design of structural systems of this type. Inspector shall be under the direct supervision of a Structural II.
    d. Structural II: Civil/structural engineer regularly engaged in the design of structural systems of this type, licensed in the State in with which the Project is located. The licensed engineer shall review and approve all reports.

B. Structural Testing and Special Inspection Requirements – Level 1:

1. Samples and Tests for Special Inspections; performed by Technical I.

    a. Masonry Unit Tests: Performed in accordance with ACI 530.1 as follows:

1.) Units conform to ASTM C55 or ASTM C90.
1.) Test units in accordance with ASTM C140 prior to the start of construction.
2.) During construction, one set of tests for each 5000 square feet of wall area, but not less than one set for the project.

b. Prism Tests: Performed in accordance with ACI 530.1 as follows:

1.) A set of 3 masonry prisms for each masonry type shall be tested in accordance with ASTM C1314 for each 5000 square feet of wall area prior to the start of construction.
2.) During construction, a set of 3, masonry prisms shall be built and tested in accordance with ASTM C1314 for each 5000 square feet of wall area, but not less than one set of 3, prisms for the project.
3.) The compressive strength of masonry determined in accordance with ASTM C1314 for each set of prisms shall equal or exceed specified f'm.

2. Masonry Preparation and Placement; performed by Technical I.

a. On a periodic basis, verify that masonry bearing surfaces are clean.
b. On a periodic basis, verify that masonry units are clean, sound and dry.
c. On a periodic basis, verify proportions of prepared mortar are consistent with previously submitted materials.

3. Masonry Preparation and Placement; preformed by Structural I.

a. On a periodic basis, inspect laying of masonry units for nominal unit widths, stack or running bond, size and location of structural elements, proper thickness and tooling of mortar joints, and acceptable depth of furrowing of bed joints. Note temperature at time of inspection.
b. On a continuous basis, observe selection of samples for masonry unit tests or preparation, storage, handling of test prisms, depending on method used. (Contractor shall provide all labor and materials to construct prism tests.)
c. On a periodic basis, inspect construction, expansion and contraction joints for location and continuity of steel.
d. On a periodic basis, verify hot and cold weather procedures are followed.
e. On a periodic basis, verify wall cavities are protected against entry of precipitation.

4. Masonry Reinforcement; performed by Structural I.

a. On a periodic basis, inspect placement and alignment of vertical bars and dowels for size, grade and spacing. Inspect length of lap splices, clearances between bars, clearances to masonry units and outside face of walls, and positioning of steel.
b. On a periodic basis, inspect horizontal joint reinforcement steel and masonry reinforcement bars for size, length of lap splices, dowels, clearances between bars, clearance for masonry units and outside face of walls, and alignment.

c. On a periodic basis, inspect ties in masonry for type, straightness, embedment, spacing and size.
d. On a periodic basis, inspect the type, size, location, and installation of masonry anchorage to structural members, frames, and other construction.

5. Prior to Masonry Grouting and Capping; performed by Structural I.

a. On a periodic basis, verify placement of reinforcement and connectors remains consistent with construction documents.
b. On a periodic basis, verify that grout spaces are correctly sized and clean, cleanouts are closed after inspection and grout barriers are in place before grouting.
c. On a periodic basis, verify proportions of site prepared grout are consistent with previously submitted materials.

6. During Grouting Operations; performed by Structural I.

a. On a continuous basis, verify proper grouting technique including consolidation to approved height of grout space, reconsolidation and vibration.
b. On a periodic basis, verify proper application of dray packing.

C. Conventional Testing: Submit field test reports for tensile bond strength between face brick and mortar in exterior walls.

END OF SECTION 04 20 00

bSECTION 05 12 00 - STRUCTURAL STEEL

PART 1 - GENERAL

1.1 SUMMARY

A. This Section includes structural steel building framing, structural steel equipment framing and grout.

1.2 PERFORMANCE REQUIREMENTS

A. Connections: Provide details of simple shear connections required by the Contract Documents to be selected or completed by structural-steel fabricator to withstand ASD-service loads indicated and comply with other information and restrictions indicated.

1. Select and complete connections using AISC's "Manual of Steel Construction, Allowable Stress Design," Part 4.

1.3 SUBMITTALS

A. Product Data: For each type of product indicated.

B. Shop Drawings: Show fabrication of structural-steel components.

C. Welding certificates.

1.4 QUALITY ASSURANCE

A. Fabricator Qualifications: A qualified fabricator who participates in the AISC Quality Certification Program and is designated an AISC-Certified Plant, Category Sbd.

B. Welding: Qualify procedures and personnel according to AWS D1.1, "Structural Welding Code--Steel."

C. Comply with applicable provisions of AISC's "Code of Standard Practice for Steel Buildings and Bridges."

PART 2 - PRODUCTS

2.1 STRUCTURAL-STEEL MATERIALS

A. W-Shapes: ASTM A 992/A 992M, ASTM A 572/A 572M, Grade 50.

B. Channels, Angles**,** M, S-Shapes: ASTM A 572/A 572M, Grade 50.

C. Plate and Bar: ASTM A 36/A 36M, Grade 36.

D. Cold-Formed Hollow Structural Sections: ASTM A 500, Grade B, structural tubing.

E. Steel Pipe: ASTM A 53/A 53M, Type E or S, Grade B.

F. Welding Electrodes: Comply with AWS requirements.

2.2 BOLTS, CONNECTORS, AND ANCHORS

A. High-Strength Bolts, Nuts, and Washers: ASTM A 325, Type 1, heavy hex steel structural bolts; ASTM A 563 heavy hex carbon-steel nuts; and ASTM F 436) hardened carbon-steel washers.

1. Finish: Plain.

B. Shear Connectors: ASTM A 108, Grades 1015 through 1020, headed-stud type, cold-finished carbon steel; AWS D1.1, Type B.

C. Unheaded Anchor Rods: ASTM F 1554, Grade 36.

1. Configuration: Straight or Hooked.
2. Finish: Hot-dip zinc coating, ASTM A 153/A 153M, Class C.

D. Headed Anchor Rods: ASTM F 1554, Grade 36].

1. Finish: Hot-dip zinc coating, ASTM A 153/A 153M, Class C.

E. Threaded Rods**:** ASTM A 36/A 36M.

1. Finish: Hot-dip zinc coating, ASTM A 153/A 153M, Class C.

2.3 PRIMER

A. Primer: SSPC-Paint 25, Type II, iron oxide, zinc oxide, raw linseed oil, and alkyd.

B. Primer: Fabricator's standard lead- and chromate-free, nonasphaltic, rust-inhibiting primer.

2.4 GROUT

A. Nonmetallic, Shrinkage-Resistant Grout: ASTM C 1107, factory-packaged, nonmetallic aggregate grout, noncorrosive, nonstaining, mixed with water to consistency suitable for application and a 30-minute working time.

2.5 FABRICATION

A. Structural Steel: Fabricate and assemble in shop to greatest extent possible. Fabricate according to AISC's "Code of Standard Practice for Steel Buildings and Bridges" and AISC's "Specification for Structural Steel Buildings--Allowable Stress Design and Plastic Design **“.**

B. Shear Connectors: Prepare steel surfaces as recommended by manufacturer of shear connectors. Use automatic end welding of headed-stud shear connectors according to AWS D1.1 and manufacturer's written instructions.

2.6 SHOP CONNECTIONS

A. High-Strength Bolts: Shop install high-strength bolts according to RCSC's "Specification for Structural Joints Using ASTM A 325 or A 490 Bolts" for type of bolt and type of joint specified.

1. Joint Type: Snug tightened.

B. Weld Connections: Comply with AWS D1.1 for welding procedure specifications, tolerances, appearance, and quality of welds and for methods used in correcting welding work.

2.7 SHOP PRIMING

A. Shop prime steel surfaces except the following:

1. Surfaces embedded in concrete or mortar.
2. Surfaces to be field welded.
3. Surfaces to be high-strength bolted with slip-critical connections.
4. Surfaces to receive sprayed fire-resistive materials.
5. Galvanized surfaces.

B. Surface Preparation: Clean surfaces to be painted. Remove loose rust and mill scale and spatter, slag, or flux deposits. Prepare surfaces according to the following specifications and standards:

1. SSPC-SP 2, "Hand Tool Cleaning."
2. SSPC-SP 3, "Power Tool Cleaning."

C. Priming: Immediately after surface preparation, apply primer according to manufacturer's written instructions and at rate recommended by SSPC to provide a dry film thickness of not less than 1.52 mils. Use priming methods that result in full coverage of joints, corners, edges, and exposed surfaces.

2.8 SOURCE QUALITY CONTROL

A. Engage an independent testing and inspecting agency to perform shop tests and inspections and prepare test reports. Comply with testing and inspection requirements of Part 3, Article "Field Quality Control."

B. Correct deficiencies in Work that test reports and inspections indicate does not comply with the Contract Documents.

C. In addition to visual inspection, shop-welded shear connectors will be tested and inspected according to requirements in AWS D1.1 for stud welding.

PART 3 - EXECUTION

3.1 ERECTION

A. Examination: Verify elevations of concrete- and masonry-bearing surfaces and locations of anchor rods, bearing plates, and other embedments, with steel erector present, for compliance with requirements.

1. Proceed with installation only after unsatisfactory conditions have been corrected.

B. Set structural steel accurately in locations and to elevations indicated and according to AISC's "Code of Standard Practice for Steel Buildings and Bridges" and "Specification for Structural Steel Buildings--Allowable Stress Design and Plastic Design."

C. Setting Plates: Clean concrete- and masonry-bearing surfaces of bond-reducing materials, and roughen surfaces prior to setting base plates. Clean bottom surface of setting plates.

1. Place grout on concrete surface to a thickness necessary to level setting plate to the proper elevation.

2. Place setting plates over anchor bolts on a bed of fresh grout and tamp setting plate as necessary to level setting plate in all directions.

D. Maintain erection tolerances of structural steel within AISC's "Code of Standard Practice for Steel Buildings and Bridges."

3.2 FIELD CONNECTIONS

A. High-Strength Bolts: Install high-strength bolts according to RCSC's "Specification for Structural Joints Using ASTM A 325 or A 490 Bolts" for type of bolt and type of joint specified.

1. Joint Type: Snug tightened.

B. Weld Connections: Comply with AWS D1.1 for welding procedure specifications, tolerances, appearance, and quality of welds and for methods used in correcting welding work.

1. Comply with AISC's "Code of Standard Practice for Steel Buildings and Bridges" and "Specification for Structural Steel Buildings--Allowable Stress Design and Plastic Design" for bearing, adequacy of temporary connections, alignment, and removal of paint on surfaces adjacent to field welds.

3.3 FIELD QUALITY CONTROL

A. Testing Agency: Contractor shall engage a qualified independent testing and inspecting agency to inspect field welds.

B. Welded Connections: Field welds will be visually inspected according to AWS D1.1.

C. Correct deficiencies in Work that test reports and inspections indicate does not comply with the Contract Documents.

END OF SECTION 05 12 00

SECTION 05 31 00 - STEEL DECK

PART 1 - GENERAL

1.1 SUMMARY

A. This Section includes the following:

1. Roof deck.

1.2 SUBMITTALS

A. Product Data: For each type of deck, accessory, and product indicated.

B. Shop Drawings: Show layout and types of deck panels, anchorage details, reinforcing channels, pans, cut deck openings, special jointing, accessories, and attachments to other construction.

C. Product certificates.

D. Welding certificates.

E. Field quality-control test and inspection reports.

F. Research/Evaluation Reports: For steel deck.

1.3 QUALITY ASSURANCE

A. Welding: Qualify procedures and personnel according to AWS D1.3, "Structural Welding Code - Sheet Steel."

B. Fire-Test-Response Characteristics: Where indicated, provide steel deck units identical to those tested for fire resistance per ASTM E 119 by a testing and inspecting agency acceptable to authorities having jurisdiction.

1. Fire-Resistance Ratings: Indicated by design designations of applicable testing and inspecting agency.
2. Steel deck units shall be identified with appropriate markings of applicable testing and inspecting agency.

C. AISI Specifications: Comply with calculated structural characteristics of steel deck according to AISI's "North American Specification for the Design of Cold-Formed Steel Structural Members."

1.4 DELIVERY, STORAGE, AND HANDLING

A. Protect steel deck from corrosion, deformation, and other damage during delivery, storage, and handling.

B. Stack steel deck on platforms or pallets and slope to provide drainage. Protect with a waterproof covering and ventilate to avoid condensation.

PART 2 - PRODUCTS

2.1 MANUFACTURERS

A. Available Manufacturers: Subject to compliance with requirements, manufacturers offering products that may be incorporated into the Work include, but are not limited to, the following:

B. Manufacturers: Subject to compliance with requirements, provide products by one of the following:

1. ASC Profiles, Inc.
2. Canam Steel Corp.;The Canam Manac Group.
3. Consolidated Systems, Inc.
4. DACS, Inc.
5. D-Mac Industries Inc.
6. Epic Metals Corporation.
7. Marlyn Steel Decks, Inc.
8. New Millennium Building Systems, LLC.
9. Nucor Corp.; Vulcraft Division.
10. Roof Deck, Inc.
11. United Steel Deck, Inc.
12. Valley Joist; Division of EBSCO Industries, Inc.
13. Verco Manufacturing Co.
14. Wheeling Corrugating Company; Div. of Wheeling-Pittsburgh Steel Corporation.

2.2 ROOF DECK

A. Steel Roof Deck: Fabricate panels, without top-flange stiffening grooves, to comply with "SDI Specifications and Commentary for Steel Roof Deck," in SDI Publication No. 30, and with the following:

1. Prime-Painted Steel Sheet: ASTM A 1008/A 1008M, Structural Steel (SS), Grade 40 minimum, shop primed with manufacturer's standard baked-on, rust-inhibitive primer.

   a. Color: Manufacturer's standard Gray.

2. Deck Profile: As indicated.
3. Profile Depth: As indicated.
4. Design Uncoated-Steel Thickness: As indicated.

2.3 ACCESSORIES

A. General: Provide manufacturer's standard accessory materials for deck that comply with requirements indicated.

B. Mechanical Fasteners: Corrosion-resistant, low-velocity, power-actuated or pneumatically driven carbon-steel fasteners; or self-drilling, self-threading screws.

C. Side-Lap Fasteners: Corrosion-resistant, hexagonal washer head; self-drilling, carbon-steel screws, No. 10 minimum diameter.

D. Flexible Closure Strips: Vulcanized, closed-cell, synthetic rubber.

E. Miscellaneous Sheet Metal Deck Accessories: Steel sheet, minimum yield strength of 33,000 psi, not less than 0.0359 inch design uncoated thickness, of same material and finish as deck; of profile indicated or required for application.

F. Repair Paint: Manufacturer's standard rust-inhibitive primer of same color as primer.

PART 3 - EXECUTION

3.1 INSTALLATION

A. Install deck panels and accessories according to applicable specifications and commentary in SDI Publication No. 30, manufacturer's written instructions, requirements in this Section, and as indicated.

B. Place deck panels on supporting frame and adjust to final position with ends accurately aligned and bearing on supporting frame before being permanently fastened. Do not stretch or contract side-lap interlocks.

C. Place deck panels flat and square and fasten to supporting frame without warp or deflection.

D. Cut and neatly fit deck panels and accessories around openings and other work projecting through or adjacent to deck.

E. Provide additional reinforcement and closure pieces at openings as required for strength, continuity of deck, and support of other work.

F. Comply with AWS requirements and procedures for manual shielded metal arc welding, appearance and quality of welds, and methods used for correcting welding work.

G. Mechanical fasteners may be used in lieu of welding to fasten deck. Locate mechanical fasteners and install according to deck manufacturer's written instructions.

H. End Bearing: Install deck ends over supporting frame with a minimum end bearing of 1 ½ inches.

3.2 FIELD QUALITY CONTROL

A. Testing Agency: Engage a qualified independent testing and inspecting agency to perform field tests and inspections and prepare test reports.

B. Mechanical fasteners will be subject to inspection. Visually inspect 100% of mechanical and side lap fasteners. Record any defects in fastener installation and report corrective action.

C. Testing agency will report inspection results promptly and in writing to Contractor and Engineer.

D. Remove and replace work that does not comply with specified requirements.

E. Additional inspecting, at Contractor's expense, will be performed to determine compliance of corrected work with specified requirements.

3.3 REPAIRS

A. Repair Painting: Wire brush and clean rust spots, welds, and abraded areas on both surfaces of prime-painted deck immediately after installation, and apply repair paint.

END OF SECTION 05310

SECTION 05 50 00 – METAL FABRICATIONS

PART 1 - GENERAL

1.1 RELATED DOCUMENTS

A. Drawings and general provisions of the Contract, including General and Supplementary Conditions and Division 01 Specification Sections, apply to this Section.
B. Comply with Wisconsin Commercial Building Codes/International Building Code (IBC).
C. Comply with Americans with Disabilities Architectural Guidelines, and ICC/ANSI A117.1-Latest Edition.

1.2 SUMMARY

A. This Section specifies miscellaneous steel framing including the following:

1. Loose lintels, shelf angles, bearing and leveling plates in masonry walls.
2. Steel stairs, stringers, headers, and bearing plates.
3. Fiberglass bar grating for stair landings and treads.
4. Steel ladders.
5. Handrails and railing systems (steel pipe) including brackets, flanges and anchors.
6. Miscellaneous framing for roof drains, HVAC roof or floor penetrations.
7. Pipe bollards.
8. Steel framing and supports for mechanical and electrical equipment.
9. Miscellaneous steel trim, steel angle corner guards at overhead doors.
10. Steel channel catwalk framing and angle braces.
11. Steel framing and supports for applications where framing and supports are not specified in other sections.

1.3 RELATED SECTIONS

A. Division 03 Section “Cast-in-Place Concrete” for installation of loose anchors.
B. Division 04 Section “Unit Masonry” for installation of loose lintels and plates.
C. Division 05 Section “Structural Steel” for miscellaneous connections to steel.
D. Division 06 Section “Rough Carpentry” for install of loose anchor bolts.

1.4 CODES AND STANDARDS

A. Comply with recommended practices and procedures of the following standards and with modification as specified herein:

1. AISC – Code of Standard Practice for Steel Buildings and Bridges
2. AISC – Specifications for the Design, Fabrication, and Erection of Structural Steel for Buildings, including Commentary
3. AWS D1.1 Structural Welding Code-Steel

1.5 SUBMITTALS

A. Submit in accordance with Section 01 33 00 – Submittal Procedures.
B. Provide Welders Certificates: Per IBC 2204.1/SPS 362.2204(1) - The details of design, workmanship and technique for welding, inspection of welding, and qualifications of welding operators shall conform to the requirements of the specifications listed in IBC sections 2205, 2206, 2207, 2209 and 2210. Note: The rules pertaining to registration of structural welders are specified in ch. SPS 305. Provide a licensed structural welder (as issued by the WI Dept. of Safety & Professional Services) for areas of the building where structural welding will occur. The name of the worker and proof of licensure shall be made available to the Dept. representative upon

request.

C. In addition to product data, submit the following:

1. Shop Drawings: Showing details of fabrication, assembly and installation including templates for anchor bolt placement.

1.6 QUALITY ASSURANCE

A. Provide assemblies which, when installed comply with the following minimum requirements for structural performance, unless otherwise indicated.

1. Stairs and Landings: Fabricate stairs, landings and components to support uniform loads of 100 psf or a concentrated live load of 300 pounds. Limit stair deflections of stringers and landings to 1/360 of the span under live loads.
2. Handrails and Attachments: Capable of withstanding the following loads when tested per ASTM E 935. Concentrated load of 200 lbs. applied at any point in any direction. Uniform load of 50 lb. per linear foot, applied in any direction.

B. Welding Qualifications: Qualify procedures and personnel according to AWS D1.1/D1.1M, "Structural Welding Code - Steel." Also see 1.5, Submittals, Para. B for additional required information.

C. Welding Qualifications: Qualify procedures and personnel according to the following:

1. AWS D1.1/D1.1M, “Structural Welding Code – Steel”.
2. AWS D1.2/D1.2M, “Structural Welding Code – Aluminum”.
3. AWS D1.6, “Structural Welding Code - Stainless Steel”.

1.7 PROJECT CONDITIONS

A. Field Measurements: Verify actual locations of walls and other construction contiguous with metal fabrications by field measurements before fabrication.

1.8 COORDINATION

A. Coordinate selection of shop primers with topcoats to be applied over them. Comply with paint and coating manufacturers' written recommendations to ensure that shop primers and topcoats are compatible with one another.

B. Coordinate installation of anchorages and steel weld plates and angles for casting into concrete. Furnish setting drawings, templates, and directions for installing anchorages, including sleeves, concrete inserts, anchor bolts, and items with integral anchors, that are to be embedded in concrete or masonry. Deliver such items to Project site in time for installation.

PART 2 - PRODUCTS

2.1 METALS, GENERAL

A. Metal Surfaces, General: Provide materials with smooth, flat surfaces unless otherwise indicated. For metal fabrications exposed to view in the completed Work, provide materials without seam marks, roller marks, rolled trade names, or surface blemishes.

2.2 STRUCTURAL STEEL MATERIAL

1. Wide Flange Shapes: ASTM A 572 Grade 50, Fy = 50,000 psi.
2. Steel Plates, Miscellaneous Shapes and Bars: ASTM A 36, Fy = 36,000 psi.
3. Hollow Structural Steel Tubing: ASTM A 500, Grade B, Fy = 46,000 psi.
4. Steel Pipe: ASTM A 53, Type E or S, Grade B, Fy = 35,000 psi.

5. Stainless Steel Pipe: ASTM A312/A, A312M, Grade TP 316, of welding is required Grade TP 316L is to be used.
6. Stainless Steel Tube: ASTM A554, Grade MT 316, if welding is required Grade MT 316L is to be used.

2.3 CONNECTORS AND ANCHORS

A. Concrete Inserts: Threaded or wedge type, galvanized ferrous castings, either malleable iron, ASTM A 47, or cast steel, ASTM A 27. Provide bolts, washers, and shims as required, hot-dip galvanized per ASTM A 153.
B. Fasteners: Provide bolts, nuts, lag bolts, machine screws, wood screws, toggle bolts, masonry anchorage devices, lock washers as required for application indicated and complying with applicable Federal standards. Hot-dip galvanize fasteners for exterior applications to comply with ASTM A 153.
C. Rough Hardware: Furnish custom-fabricated bolts, plates, anchors, hangers, dowels, and other miscellaneous steel and iron shapes for framing and supporting and anchoring woodwork.

2.4 FINISHES

A. Shop Primer for Ferrous Metal: Manufacturer's or fabricator's standard, fast-curing, lead-free, universal modified alkyd primer, resistant to normal atmospheric corrosion, compatible with finish paint systems indicated, capable of providing a sound foundation for field-applied topcoats despite prolonged exposure, complying with performance requirements of FS TT-P-645. Exterior applications.
B. Galvanizing: ASTM A 123 for fabricated and un-fabricated steel products made of uncoated rolled, pressed and forged steel shapes, bars and strip 0.0229 inch and thicker.
C. Galvanizing Repair Paint: Type II (organic) zinc coating, ASTM D 520, Level III, SSPC-Paint 20 or DOD-P-21035, with dry film containing a minimum of 94 percent zinc dust by weight, Level I. Color to match hot dipped galvanizing.

2.5 FABRICATION

A. Loose Bearing and Leveling Plates: Provide for steel items bearing on masonry or concrete, as indicated. Drill plates to receive anchor bolts.
B. Loose Steel Lintels: Fabricate from shapes and to sizes indicated. Furnish adjustable masonry anchor straps, where scheduled on drawings.
C. Miscellaneous Framing and Supports: Provide as required to complete work and not included with structural steel framework. Fabricate of welded construction in as large units as possible, drill and tap as required to receive hardware and similar items. Include required anchors for building into other work, spaced not more than 24 inches o.c.
D. Steel Framed Stairs: Comply with the recommendations of the Metal Stairs Manual published by the National Association of Architectural Metal Manufacturers. Fabricate all stair components of stainless steel materials including channel stringers, headers, plates, tubes, as indicated on drawings. Provide closures for exposed ends of stringers, construct platforms of steel channel headers. Provide fiberglass bar grate treads and landings as required for design load, but not less than 1 ½” deep.
E. Stair Railings and Posts: Comply with recommendations of the Metal Stair Manual. Provide stainless steel pipe shapes as indicated, but not less than 1 ½” diameter standard pipe.
F. Hand Railings: Provide stainless steel pipe as indicated, but not less than 1 ½” diameter standard size pipe.
G. Pipe Bollards: Fabricate bollards of schedule 40 pipe. Provide 1/4" thick steel plate welded to bottom of pipe. Prime paint exposed surfaces.
H. Reinforcing Angles: Provide steel reinforcement at all concentrated loads from suspended partitions, piping or mechanical equipment above or below roof.
I. Ladders: Fabricate ladders for locations shown, with dimensions, spacing, and anchorage as indicated. Provide Brown-Campbell Ladder Rungs – LRA1 or equal, 1” solid, round, abrasive

coated steel ladder rung. Comply with the requirements of ANSI A14.3. Prime paint after fabrication.

J. Fiberglass Grates: Fabricate treads 1 ½" deep fiberglass bars with mesh bars at 6" on center and non-slip gritted nosing. Fabricate landing platform from 1 ½" deep 1 ½"x 1 ½" mesh fiberglass grate. Provide products as manufactured by one of the following or approved equal.

1. VersaGate Fiberglass Grating; www.versagrate.com
2. Bedford Reinforced Plastics; www.bedfordreinforced.com

PART 3 - EXECUTION

3.1 EXAMINATION

A. Installation: Perform cutting, drilling, and fitting required for installation, set work accurately in location, alignment and elevation, measured from established lines and levels. Provide anchorage devices and fasteners where necessary for installation of other work.

1. Set loose items on cleaned bearing surfaces, using wedges or other adjustments as required. Solidly pack open spaces with bedding mortar, consisting of 1 part Portland cement to 3 parts sand and only enough water for packing and hydration, or use commercial non-shrink grout material.
2. Touch-up shop paint after installation. Clean field welds, bolted connections and abraded areas and apply same type of paint as used in shop. Use galvanizing repair paint on damaged galvanized surfaces.

B. Fabrication, General: Use materials of size and thickness shown, or, if not shown, of required size, grade and thickness to produce strength and durability in finished product. Shop-paint all items not specified to be galvanized after fabrication.

1. Weld corners and seams continuously to comply with AWS recommendations. Use materials and methods that minimize distortion and develop strength and corrosion resistance of base materials. Obtain fusion without undercut or overlap. Remove welding flux immediately. Finish exposed welds and surfaces smooth and blended so that no roughness shows after finishing and contour of welded surface matches those adjacent.
2. Form exposed connections with hairline joints, flush and smooth, using concealed fasteners where possible. Locate joints where least conspicuous.
3. Welding: Quality procedures and personnel according to the following:

a. AWS D1.1, "Structural Welding Code – Steel".
b. AWS D1.2, "Structural Welding Code – Aluminum".
c. AWS D1.3, "Structural Welding Code – Sheet Metal".
d. AWS D1.6, "Structural Welding Code – Stainless Steel".

C. Shop Painting: Apply shop primer to surface of metal fabrications except those embedded in concrete or galvanized, comply with SSPC-PA1 and requirements indicated below:

1. Surface Preparation: Comply with SSPC-SP6 "Commercial Blast Cleaning" for exterior work and with SSPC-SP3 "Power Tool Cleaning" for interior work.
2. Stripe paint edges, corners, crevices, bolts, welds and sharp edges.

END OF SECTION 05 50 00

SECTION 06 10 00 - ROUGH CARPENTRY

PART 1 - GENERAL

1.1 SUMMARY

A. This Section includes the following:

1. Framing with dimension lumber.
2. Framing with engineered wood products.
3. Wood blocking, cants, and nailers.
4. Wood furring
5. Plywood backing panels.

1.2 SUBMITTALS

A. Product Data: For each type of process and factory-fabricated product.

1. Include data for wood-preservative treatment from chemical treatment manufacturer and certification by treating plant that treated materials comply with requirements.

1.3 QUALITY ASSURANCE

A. Forest Certification: For the following wood products, provide materials produced from wood obtained from forests certified by an FSC-accredited certification body to comply with FSC 1.2, "Principles and Criteria":

1. Dimension lumber framing.
2. Laminated veneer lumber.

PART 2 - PRODUCTS

2.1 WOOD PRODUCTS, GENERAL

A. Lumber: DOC PS 20 and applicable rules of grading agencies indicated. If no grading agency is indicated, provide lumber that complies with the applicable rules of any rules-writing agency certified by the ALSC Board of Review. Provide lumber graded by an agency certified by the ALSC Board of Review to inspect and grade lumber under the rules indicated.

1. Factory mark each piece of lumber with grade stamp of grading agency.
2. Provide dressed lumber, S4S, unless otherwise indicated.

2.2 WOOD-PRESERVATIVE-TREATED LUMBER

A. Preservative Treatment by Pressure Process: AWPA C2, except that lumber that is not in contact with the ground and is continuously protected from liquid water may be treated according to AWPA C31 with inorganic boron (SBX).

1. Preservative Chemicals: Acceptable to authorities having jurisdiction and containing no arsenic or chromium.

B. Kiln-dry lumber after treatment to a maximum moisture content of 19 percent.

C. Mark lumber with treatment quality mark of an inspection agency approved by the ALSC Board of Review.

D. Application: Treat all rough carpentry and the following:

1. Wood cants, nailers, curbs, equipment support bases, blocking, stripping, and similar members in connection with roofing, flashing, vapor barriers, and waterproofing.
2. Wood sills, sleepers, blocking, and similar concealed members in contact with masonry or concrete.
3. Wood framing and furring attached directly to the interior of below-grade exterior masonry or concrete walls.
4. Wood framing members that are less than 18 inches above the ground in crawlspaces or unexcavated areas.
5. Wood floor plates that are installed over concrete slabs-on-grade.

2.3 DIMENSION LUMBER FRAMING

A. Maximum Moisture Content: 19 percent for 2 inch nominal thickness or less.

B. Framing Grade and Species: No. 2 grade and any of the following species:
1. Southern pine; SPIB.
2. Douglas fir-larch; WCLIB or WWPA.
3. Spruce-pine-fir; NLGA.

2.4 PLYWOOD BACKING PANELS

A. Telephone and Electrical Equipment Backing Panels: DOC PS 1, Exposure 1, C-D Plugged in thickness indicated or, if not indicated, not less than ½ inch nominal thickness.

2.5 FASTENERS

A. General: Provide fasteners of size and type indicated that comply with requirements specified.

1. Where rough carpentry is exposed to weather, in ground contact, pressure-preservative treated, or in area of high relative humidity, provide fasteners with hot-dip zinc coating complying with ASTM A 153/A 153M] [of Type 304 stainless steel.

B. Power-Driven Fasteners: NES NER-272.

C. Bolts: Steel bolts complying with ASTRM A 307; with ASTM A 563 hex nuts and, where indicated, flat washers.

2.6 METAL FRAMING ANCHORS

A. Available Manufacturers: Subject to compliance with requirements, manufacturers offering products that may be incorporated into the Work include, but are not limited to, the following:

B. Manufacturers: Subject to compliance with requirements, provide products by one of the following:

C. Basis-of-Design Products: Subject to compliance with requirements, provide comparable products by one of the following:

1. Alpine Engineered Products, Inc.
2. Cleveland Steel Specialty Co.
3. Harlen Metal Products, Inc.
4. KC Metals Products, Inc.
5. Simpson Strong-Tie Co., Inc.
6. Southeastern Metals Manufacturing Co., Inc.
7. USP Structural Connectors.

2.7 MISCELLANEOUS MATERIALS

A. Sill-Sealer Gaskets: Glass-fiber-resilient insulation, fabricated in strip form, for use as a sill sealer; 1 inch nominal thickness, compressible to 1/32 inch; selected from manufacturer's standard widths to suit width of sill members indicated.

PART 3 - EXECUTION

3.1 INSTALLATION

A. Set rough carpentry to required levels and lines, with members plumb, true to line, cut, and fitted. Fit rough carpentry to other construction; scribe and cope as needed for accurate fit. Locate nailers, blocking, and similar supports to comply with requirements for attaching other construction.

B. Framing Standard: Comply with AF&PA's "Details for Conventional Wood Frame Construction," unless otherwise indicated.

C. Framing with Engineered Wood Products: Install engineered wood products to comply with manufacturer's written instructions.

D. Metal Framing Anchors: Install metal framing to comply with manufacturer's written instructions.

E. Do not splice structural members between supports, unless otherwise indicated.

F. Comply with AWPA M4 for applying field treatment to cut surfaces of preservative-treated lumber.

G. Securely attach rough carpentry work to substrate by anchoring and fastening as indicated, complying with the following:

1. NES NER-272 for power-driven fasteners.
2. Table 2304.9.1, "Fastening Schedule," in ICC's International Building Code.
3. Table 23-II-B-1, "Nailing Schedule," and Table 23-II-B-2, "Wood Structural Panel Roof Sheathing Nailing Schedule," in ICBO's Uniform Building Code.
4. Table 2305.2, "Fastening Schedule," in BOCA's BOCA National Building Code.
5. Table 2306.1, "Fastening Schedule," in SBCCI's Standard Building Code.
6. Table R602.3(1), "Fastener Schedule for Structural Members," and Table R602.3(2), "Alternate Attachments," in ICC's International Residential Code for One- and Two-Family Dwellings.
7. Table 602.3(1), "Fastener Schedule for Structural Members," and Table 602.3(2), "Alternate Attachments," in ICC's International One- and Two-Family Dwelling Code.

3.2 PROTECTION

A. Protect wood that has been treated with inorganic boron (SBX) from weather. If, despite protection, inorganic boron-treated wood becomes wet, apply EPA-registered borate treatment. Apply borate solution by spraying to comply with EPA-registered label.

END OF SECTION 06 10 00

SECTION 07 11 13 - BITUMINOUS DAMPPROOFING

PART 1 - GENERAL

1.1 SUMMARY

A. This Section includes the following:

1. Cold-applied, cut-back asphalt dampproofing.
2. Cold-applied, emulsified-asphalt dampproofing.

1.2 SUBMITTALS

A. Product Data: For each type of product indicated.

B. LEED Submittal:

1. Product Data for Credit EQ 4.2: For dampproofing, including printed statement of VOC content.

1.3 PROJECT CONDITIONS

A. Ventilation: Provide adequate ventilation during application of dampproofing in enclosed spaces. Maintain ventilation until dampproofing has cured.

PART 2 - PRODUCTS

2.1 COLD-APPLIED, EMULSIFIED-ASPHALT DAMPPROOFING

A. Available Manufacturers: Subject to compliance with requirements, manufacturers offering products that may be incorporated into the Work include, but are not limited to, the following:

B. Manufacturers: Subject to compliance with requirements, provide products by one of the following:

1. ChemMasters Corp.
2. Degussa Building Systems; Sonneborn Brand Products.
3. Gardner Gibson, Inc.
4. Henry Company.
5. Karnak Corporation.
6. Koppers Inc.
7. Malarkey Roofing Products.
8. Meadows, W. R., Inc.
9. Tamms Industries, Inc.

C. Trowel Coats: ASTM D 1227, Type II, Class 1.

D. Fibered Brush and Spray Coats: ASTM D 1227, Type II, Class 1.

E. Brush and Spray Coats: ASTM D 1227, Type III, Class 1.

F. VOC Content: 0.25 lb/gal. (30 g/L) or less.

2.2 PROTECTION COURSE

A. Protection Course: Unfaced, fan-folded, extruded-polystyrene board insulation, nominal thickness 1/4 inch (6 mm) with compressive strength of not less than 8 psi (55 kPa) per ASTM D 1621.

2.3 MISCELLANEOUS MATERIALS

A. Emulsified-Asphalt Primer: ASTM D 1227, Type III, Class 1, except diluted with water as recommended by manufacturer.

B. Asphalt-Coated Glass Fabric: ASTM D 1668, Type I.

PART 3 - EXECUTION

3.1 PREPARATION

A. Clean substrates of projections and substances detrimental to work; fill voids, seal joints, and apply bond breakers if any, as recommended by prime material manufacturer.

3.2 APPLICATION, GENERAL

A. Comply with manufacturer's written recommendations unless more stringent requirements are indicated or required by Project conditions to ensure satisfactory performance of dampproofing.

B. Apply dampproofing to footings and foundation walls where opposite side of wall faces building interior or occupied space.

1. Apply from finished-grade line to top of footing, extend over top of footing, and down a minimum of 6 inches (150 mm) over outside face of footing.
2. Extend 12 inches (300 mm) onto intersecting walls and footings, but do not extend onto surfaces exposed to view when Project is completed.
3. Install flashings and corner protection stripping at internal and external corners, changes in plane, construction joints, cracks, and where shown as "reinforced," by embedding an 8-inch- (200-mm-) wide strip of asphalt-coated glass fabric in a heavy coat of dampproofing. Dampproofing coat for embedding fabric is in addition to other coats required.

3.3 COLD-APPLIED, EMULSIFIED-ASPHALT DAMPPROOFING

A. On Concrete Foundations: Apply 2 brush or spray coats at not less than 1.5 gal./100 sq. ft. (0.6 L/sq. m) for first coat and 1 gal./100 sq. ft. (0.4 L/sq. m) for second coat, 1 fibered brush or spray coat at not less than 3 gal./100 sq. ft. (1.2 L/sq. m), or 1 trowel coat at not less than 4 gal./100 sq. ft. (1.6 L/sq. m).

B. On Unexposed Face of Concrete Retaining Walls: Apply 1 brush or spray coat at not less than 1.25 gal./100 sq. ft. (0.5 L/sq. m).

C. On Unexposed Face of Masonry Retaining Walls: Apply primer and 1 brush or spray coat at not less than 1.25 gal./100 sq. ft. (0.5 L/sq. m).

3.4 INSTALLATION OF PROTECTION COURSE

A. Where indicated, install protection course over completed-and-cured dampproofing. Comply with dampproofing material manufacturer's written recommendations for attaching protection course.

1. Support protection course with spot application of adhesive of type recommended by protection board manufacturer over cured coating.
2. Install protection course within 24 hours of installation of dampproofing (while coating is tacky) to ensure adhesion.

END OF SECTION

SECTION 07 26 00 – UNDER SLAB VAPOR BARRIER

PART 1 - GENERAL

1.1 SUMMARY

A. This Section includes under slab vapor barrier, seam tape, pipe boots, and detail strips.

1.2 REFERENCES

A. American Society for Testing and Materials (ASTM):

1. ASTM E 1745-09 Standard specification for plastic water vapor retarders used in contact with soil and granular fill under concrete slabs.
2. ASTM E 154-99 Standard test method for water vapor retarders used in contact with earth under concrete slabs.
3. ASTM E 96-05 Standard test methods for water vapor transmission of materials.
4. ASTM E 1643-09 Selection, design, installation and inspection of water vapor retarders used in contact with earth or granular fill under concrete slabs.
5. ASTM F 1869 Standard test method for measuring moisture vapor emission rate of concrete subfloor using anhydrous calcium chloride.
6. ASTM F 1249-06 Standard test method for water vapor transmission rate through plastic film and sheeting using a modulated infrared sensor.
7. ASTM D 903 Standard test method for peel or stripping strength of adhesive bonds

1.3 SUBMITALS

A. Product Data: Submit product data for each type of product specified.

B. Manufacture's Installation Instructions: Furnish installation instructions for placement, seaming and wall termination connections.

1.4 QUALITY ASSURANCE

A. Comply with manufacture's written installation instructions for placement, seaming and wall termination connections.

B. Contractor shall photograph installed product seams, wall termination seaming and patches around mechanical penetrations.

1.5 DELIVERY, STORAGE AND HANDLING

A. Protect materials from physical damage and from deterioration due to exposure to sunlight. Store inside and in a dry location. Comply with manufacturer's written instructions for handling, storing and protecting during installation.

PART 2 - PRODUCTS

2.1 MATERIALS, GENERAL

A. Available Products: Subject to compliance with requirements, products that may be incorporated into the Work include, but are not limited to, products listed herein.

B. Products: Provide material sized to fit applications indicated, select for manufactures standard thickness, width, and length.

2.2 VAPOR BARRIER

A. Product Requirements: Polyethylene film, 15 or 16 mil thickness, with a permeance rating or 0.01 perms or less, as per ASTM F 1249 or ASTM E 1869, Class A rating as per ASTM 1745. Maintain permeance of less than 0.01 perms after conditional tests per ASTM E 154.

B. Manufactures: Provide vapor barrier as manufactured by one of the following:

1. Stego Wrap 15-mil Vapor Barrier, by Stego Industries LLC.
2. Barrier-Bac, IntePlus XL FilmVB-350 by Inteplast Group.
3. Husky Yellow Guard 15 mil by Poly-Amerrica.
4. Reflex Super, Class A by Monarflex.
5. Vaporgaurd 15-mil, Class A by Reef Industries.
6. Perminator 15 mil, Class A by W.R. Meadows.
7. Viper Vaporcheck II by Insulation Solutions, Inc.

2.3 ACCESSORIES

A. Seam Tape: High density polyethylene tape with pressure sensitive adhesive. Minimum width 4 inches. Maximum perm rating 0.30 as per ASTM F 1249 or ASTM E 96.

B. Vapor Proofing Mastic: Manufacture’s approved mastic, ASTM F 1249 or ASTM E 96, 0.3 perms or less.

C. Pipe Boots: Construct pipe boots from vapor barrier material and pressure sensitive tape and or per manufactures instructions.

PART 3 - EXECUTION

3.1 PREPARATION

A. Substrate: Level and tamp aggregate base free of projections. Clean all horizontal surfaces to receive vapor barrier, including removing projections capable of puncturing vapor retarders.

B. Inspect Wall Surfaces: Remove any material that would reduce the bond of mastic adhesives.

3.2 INSTALLATION

A. Installation shall be in accordance with manufacture’s instruction and ASTM E 1643.

B. Unroll vapor barrier with the longest dimension parallel with the direction of pour. Smooth the surface to omit voids and folds in the film.

C. Lap joints a minimum of 6 inches and seal with manufacture's pressure sensitive tap. Seal edges to foundation walls and other vertical surfaces.

END OF SECTION 07 26 00

SECTION 07 41 20 - METAL WALL PANELS

PART 1 - GENERAL

1.1 SUMMARY

A. This Section includes the following:
1. Concealed-Fastener, Insulated Metal Wall Panels: Factory-assembled, with exterior and interior metal panels and insulated foam core, designed to span in a vertical direction.
2. Accessories required for weathertight installation.

1.2 PERFORMANCE REQUIREMENTS

A. Structural Performance: Capable of withstanding the effects of gravity loads and the following loads and stresses, based on testing according to ASTM E 1592:

1. Wind Loads: Minimum design wind pressure of 20 psf, acting inward or outward.
2. Deflection Limits: Withstand test pressures with deflection no greater than l/180 of the span and no evidence of material failure, structural distress, or permanent deformation exceeding 0.2 percent of the clear span.

a. Test Pressures: 150 percent of inward and outward wind-load design pressures.

B. Thermal Performance: Provide factory installed insulation with thermal-resistance value (R-28.6) when tested according to ASTM C 236 or ASTM C 518.

1.3 SUBMITTALS

A. Product Data: For each type of metal wall panel and accessory indicated.

B. Shop Drawings: Show layouts of metal wall panels, including plans, elevations, sections, details, and attachments to other work.

1. Include details of edge conditions, joints, panel profiles, corners, anchorages, attachment system, trim, flashings, closures, and accessories.
2. Include structural analysis data signed and sealed by the qualified professional engineer responsible for their preparation.

C. Coordination Drawings: Drawn to scale and coordinating metal wall panel installation with penetrations and wall-mounted items.

D. Samples: For each exposed finish.

E. Material certificates.

F. Product test reports.

1.4 QUALITY ASSURANCE

A. Installer Qualifications: An employer of workers trained and approved by manufacturer.

1. Installer's responsibilities include fabricating and installing metal wall panel assemblies and providing professional engineering services needed to assume engineering responsibility.

1.5 WARRANTY

A. Special Warranty: Manufacturer's standard form in which manufacturer agrees to repair or replace components of metal wall panel assemblies that fail in materials or workmanship within specified warranty period.

1. Failures include, but are not limited to, the following:

a. Structural failures, including rupturing, cracking, or puncturing.
b. Deterioration of metals, metal finishes, and other materials beyond normal weathering.

2. Warranty Period: One year from date of Substantial Completion.

PART 2 - PRODUCTS

2.1 MANUFACTURERS

A. In other Part 2 articles where titles below introduce lists, the following requirements apply for product selection:

1. Available Manufacturers: Subject to compliance with requirements, manufacturers offering products that may be incorporated into the Work include, but are not limited to, the manufacturers specified.

2.2 PANEL MATERIALS

A. Panel Sheets: G-90-Coated Steel Sheet conforming to ASTM A 653 and or AZ50 aluminum-zinc alloy coated steel, conforming to ASTM A 792/A 792M, minimum grade 33, prepainted by the coil-coating process per ASTM A 755/A 755M

B. Panel Sealants:

1. Sealant Tape: Pressure-sensitive, gray polyisobutylene compound sealant tape with release-paper backing; ½ inch wide and 1/8 inch thick.
2. Joint Sealant: ASTM C 920; as recommended in writing by metal wall panel manufacturer.
3. Butyl-Rubber-Based, Solvent-Release Sealant: ASTM C 1311.

2.3 MISCELLANEOUS MATERIALS

A. Fasteners: Self-tapping screws, and other acceptable fasteners recommended by metal panel manufacture. Where exposed fasteners cannot be avoided, supply corrosion resistant fastener with heads matching color of metal panels by means of factory applied coating, with weather tight resilient washers.

B. Panel Clips: ASTM a 653/A653M, G90 (Z180) hot dip galvanized zinc coating, one piece configured for concealment in panel joints and identical to clip utilized in tests demonstrating compliance with performance requirements.

2.4 INSULATED METAL WALL PANELS

A. Concealed-Fastener, Insulated Metal Wall Panels: Factory-assembled, with exterior and interior metal panels and insulated foam core, designed to span in a vertical direction. Include accessories required for weathertight installation.

1. Manufacturers:
   a. MBCI; Div. of NCI Building Systems; www.mbci.com.

2. Profile: CF Flute (formerly known as eco-FICIENT Classic), 42 inch wide by 4 inches deep as indicated on drawings.

3. Material: Exterior and Interior sheet steel, 26 gauge.
   a. Exterior Finish: Stucco-embossed.
   b. Interior Finish: Stucco-embossed, Mesa Profile.
   c. Exterior Coatings: Signature 200. Color as selected to match existing.
   d. Interior Coatings: Igloo White.

4. Thermal Performance: R-value 28.6 for 4 inch thickness.

2.5 ACCESSORIES

A. Wall Panel Accessories: Provide components required for a complete metal wall panel assembly including trim, copings, fasciae, mullions, sills, corner units, clips, flashings, sealants, gaskets, fillers, closure strips, gutters and downspouts and similar items. Match material and finish of metal wall panels, unless otherwise indicated.

1. Closures: Provide closures at eaves and rakes, fabricated of same metal as metal wall panels.
2. Closure Strips: Closed-cell, expanded, cellular, rubber or crosslinked, polyolefin-foam or closed-cell laminated polyethylene; minimum 1 inch thick, flexible closure strips; cut or premolded to match metal wall panel profile. Provide closure strips where indicated or necessary to ensure weathertight construction.

B. Flashing and Trim: Formed from 0.0179 inch thick, metallic-coated steel sheet. Provide flashing and trim as required to seal against weather and to provide finished appearance. Locations include, but are not limited to, bases, drips, sills, jambs, corners, endwalls, framed openings, rakes, fasciae, parapet caps, soffits, reveals, and fillers. Finish flashing and trim with same finish system as adjacent metal wall panels.

C. Downspouts: Formed from 0.0179 inch thick, metallic-coated steel sheet; in 10 foot long sections, complete with formed elbows and offsets. Finish downspouts to match metal wall panels.

2.6 FABRICATION

A. General: Fabricate and finish metal wall panels and accessories at the factory to greatest extent possible, by manufacturer's standard procedures and processes, as necessary to fulfill indicated performance requirements demonstrated by laboratory testing. Comply with indicated profiles and with dimensional and structural requirements.

1. Form panel lines, breaks, and angles to be sharp and true, with surfaces free from warp and buckle.
2. Fabricate wall panels with panel stiffeners as required to maintain fabrication tolerances and to withstand design loads.

B. Fabricate metal wall panels in a manner that eliminates condensation on interior side of panel and with joints between panels designed to form weathertight seals.

C. Provide panel profile, including major ribs and intermediate stiffening ribs, if any, for full length of panel.

D. Where indicated, fabricate metal wall panel joints with factory-installed captive gaskets or separator strips that provide a tight seal and prevent metal-to-metal contact, in a manner that will minimize noise from movements within panel assembly.

E. Sheet Metal Accessories: Fabricate flashing and trim to comply with recommendations in SMACNA's "Architectural Sheet Metal Manual" that apply to the design, dimensions, metal, and other characteristics of item indicated.

F. Protect mechanical and painted finishes on exposed surfaces from damage by applying a strippable, temporary protective covering before shipping.

PART 3 - EXECUTION

3.1 PREPARATION

A. Examine metal panel system substrate with installer present. Inspect for erection tolerances and other conditions that would adversely affect installation of metal panels.
1. Inspect framing that will support insulated metal panels to determine if support components are installed as indicated on approved shop drawings and are within tolerances acceptable to metal panel manufacturer and installer.
2. Correct out of tolerance work and other deficient conditions prior to proceeding with insulated metal panel installation.

B. Install flashings and other sheet metal to comply with requirements specified in Division 7 Section "Sheet Metal Flashing and Trim."

3.2 METAL WALL PANEL INSTALLATION, GENERAL

A. General: Install metal wall panels in orientation, sizes, and locations indicated on Drawings. Install panels perpendicular to girts unless otherwise indicated. Anchor metal wall panels and other components of the Work securely in place, with provisions for thermal and structural movement.

1. Field cutting of metal wall panels by torch is not permitted.
2. Rigidly fasten base end of metal wall panels and allow eave end free movement due to thermal expansion and contraction. Predrill panels.
3. Install screw fasteners in predrilled holes.
4. Locate panel splices over, but not attached to, structural supports. Stagger panel splices and end laps to avoid a four-panel lap splice condition.
5. Apply elastomeric sealant continuously between metal base channel (sill angle) and concrete, and elsewhere as indicated or, if not indicated, as necessary for waterproofing.
6. Provide weatherproof escutcheons for pipe and conduit penetrating exterior walls.

B. Fastening: Attach panels to metal framing using screws, fasteners, sealants and adhesives recommended by metal panel manufacturer.

1. Fasten metal panels to supports with fasteners at each location indicted on approve shop drawings at spacing and with fasteners recommended by manufacturer.
2. Cut panels in field where required using manufacturer’s recommended methods.

C. Metal Protection: Where dissimilar metals will contact each other or corrosive substrates, protect against galvanic action by painting contact surfaces with bituminous coating, by applying rubberized-asphalt underlayment to each contact surface, or by other permanent separation as recommended by metal wall panel manufacturer.

D. Joint Sealers: Install gaskets, joint fillers, and sealants where indicated and where required for weatherproof performance of metal wall panel assemblies.

1. Seal metal wall panel end laps with double beads of tape or sealant, full width of panel. Seal side joints where recommended by metal wall panel manufacturer.
2. Prepare joints and apply sealants to comply with requirements in Division 7 Section "Joint Sealants."

3.3 ACCESSORY INSTALLATION

A. General: Install accessories with positive anchorage to building and weathertight mounting and provide for thermal expansion. Coordinate installation with flashings and other components.

1. Install components required for a complete metal wall panel assembly including trim, copings, corners, seam covers, flashings, sealants, gaskets, fillers, closure strips, and similar items.
2. Comply with performance requirements, manufacturer's written installation instructions, and SMACNA's "Architectural Sheet Metal Manual." Provide concealed fasteners where possible, and set units true to line and level as indicated. Install work with laps, joints, and seams that will be permanently watertight and weather resistant.
3. Provide elbows at base of downspouts to direct water away from building.
4. Tie downspouts to underground drainage system indicated.

3.4 CLEANING AND PROTECTION

A. Remove temporary protective coverings and strippable films, if any, as metal wall panels are installed, unless otherwise indicated in manufacturer's written installation instructions. On completion of metal wall panel installation, clean finished surfaces as recommended by metal wall panel manufacturer. Maintain in a clean condition during construction.

B. After metal wall panel installation, clear weep holes and drainage channels of obstructions, dirt, and sealant.

END OF SECTION 07 41 20

SECTION 07 53 23 - ADHERED EPDM ROOFING SYSTEM

PART 1 - GENERAL

1.1 RELATED DOCUMENTS

A. Drawings and general provisions of the Contract, including General and Supplementary Conditions and Division 01 Specification Sections, apply to this Section.

1.2 SUMMARY

A. Section Includes:

1. Adhered EPDM membrane roofing system.
2. Roof insulation.

B. Related Sections:

1. Division 05 Section "Steel Decking" for furnishing acoustical deck rib insulation.
2. Division 06 Section "Rough Carpentry".
3. Division 07 Section "Sheet Metal Flashing and Trim" for flashings, and counterflashings.
4. Division 07 Section "Joint Sealants"

1.3 DEFINITIONS

A. Roofing Terminology: See ASTM D 1079 and glossary of NRCA's "The NRCA Roofing and Waterproofing Manual" for definitions of terms related to roofing work in this Section.

1.4 PERFORMANCE REQUIREMENTS

A. General Performance: Installed membrane roofing and base flashings shall withstand uplift pressures generated by a wind speed of 90 MPH, thermally induced movement, and exposure to weather without failure due to defective manufacture, fabrication, installation, or other defects in construction. Membrane roofing and base flashings shall remain watertight.

B. Material Compatibility: Provide roofing materials that are compatible with one another under conditions of service and application required, as demonstrated by membrane roofing manufacturer based on testing and field experience.

1.5 SUBMITTALS

A. Product Data: For each type of product indicated.

B. Shop Drawings: For roofing system. Include plans, elevations, sections, details, and attachments to other work.

1. Base flashings and membrane terminations.
2. Tapered insulation, including slopes.
3. Roof plan showing orientation of steel roof deck and orientation of membrane roofing and fastening spacings and patterns for mechanically fastened membrane roofing.
4. Insulation fastening patterns for corner, perimeter, and field-of-roof locations.

C. Qualification Data: For qualified Installer and manufacturer.

D. Manufacturer Certificate: Signed by roofing manufacturer certifying that membrane roofing system complies with requirements specified in "Performance Requirements" Article.

1. Submit evidence of complying with performance requirements.

E. Product Test Reports: Based on evaluation of comprehensive tests performed by manufacturer and witnessed by a qualified testing agency, for components of membrane roofing system.

F. Field quality-control reports.

G. Maintenance Data: For membrane roofing system to include in maintenance manuals.

H. Warranties: Sample of special warranties.

1.6 QUALITY ASSURANCE

A. Manufacturer Qualifications: A qualified manufacturer that is UL listed for membrane roofing system identical to that used for this Project.

B. Installer Qualifications: A qualified firm that is approved, authorized, or licensed by membrane roofing system manufacturer to install manufacturer's product and that is eligible to receive manufacturer's special warranty.

C. The manufacturer’s agent or representative shall inspect the site prior to beginning work and at the completion of all work to ensure compliance with the manufacturer’s instructions and requirements.

D. Source Limitations: Obtain components including roof insulation, fasteners products for membrane roofing system from same manufacturer as membrane roofing or approved by membrane roofing manufacturer.

E. Exterior Fire-Test Exposure: ASTM E 108, Class B; for application and roof slopes indicated, as determined by testing identical membrane roofing materials by a qualified testing agency. Materials shall be identified with appropriate markings of applicable testing agency.

1.7 DELIVERY, STORAGE, AND HANDLING

A. Deliver roofing materials to Project site in original containers with seals unbroken and labeled with manufacturer's name, product brand name and type, date of manufacture, approval or listing agency markings, and directions for storing and mixing with other components.

B. Store liquid materials in their original undamaged containers in a clean, dry, protected location and within the temperature range required by roofing system manufacturer. Protect stored liquid material from direct sunlight.

1. Discard and legally dispose of liquid material that cannot be applied within its stated shelf life.

C. Protect roof insulation materials from physical damage and from deterioration by sunlight, moisture, soiling, and other sources. Store in a dry location. Comply with insulation manufacturer's written instructions for handling, storing, and protecting during installation.

D. Handle and store roofing materials and place equipment in a manner to avoid permanent deflection of deck.

1.8 PROJECT CONDITIONS

A. Weather Limitations: Proceed with installation only when existing and forecasted weather conditions permit roofing system to be installed according to manufacturer's written instructions and warranty requirements.

1.9 WARRANTY

A. Special Warranty: Manufacturer's standard or customized form, without monetary limitation, in which manufacturer agrees to repair or replace components of membrane roofing system that fail in materials or workmanship within specified warranty period.

1. Special warranty includes membrane roofing, base flashings, roof insulation, fasteners, roofing accessories and other components of membrane roofing system.
2. Warranty Period: 10 years from date of Substantial Completion.

PART 2 - PRODUCTS

2.1 EPDM MEMBRANE ROOFING

A. EPDM: ASTM D 4637, Type I, non-reinforced, uniform, flexible EPDM sheet.

1. Manufacturers: Subject to compliance with requirements, provide products by one of the following:

a. Carlisle SynTec Incorporated.

b. Firestone Building Products.
c. GAF Materials Corporation.
d. GenFlex Roofing Systems.
e. Johns Manville.
f. Versico Incorporated.

2. Thickness: 60 mils, nominal.
3. Exposed Face Color: Black.

2.2 AUXILIARY MEMBRANE ROOFING MATERIALS

A. General: Auxiliary membrane roofing materials recommended by roofing system manufacturer for intended use and compatible with membrane roofing.

B. Waterproof Underlayment: Self-adhered roofing underlayment is a membrane composed to two waterproofing materials, an aggressive rubberized asphalt adhesive backed by a layer of slip resistant coated high density cross laminated polyethylene film. Membrane thickness 40 mil. Grace Ice & Water Shield by GCP Applied Technologies or approved equal.

C. Sheet Flashing: 60-mil thick EPDM, partially cured or cured, according to application.

D. Protection Sheet: Epichlorohydrin or neoprene non-reinforced flexible sheet, 55- to 60-mil thick, recommended by EPDM manufacturer for resistance to hydrocarbons, non-aromatic solvents, grease, and oil.

E. Bonding Adhesive: Manufacturer's standard, water based.

F. Seaming Material: Single-component, butyl splicing adhesive and splice cleaner Manufacturer's standard, synthetic-rubber polymer primer and 3-inch wide minimum, butyl splice tape with release film.

G. Lap Sealant: Manufacturer's standard, single-component sealant.

H. Water Cutoff Mastic: Manufacturer's standard butyl mastic sealant.

I. Metal Termination Bars: Manufacturer's standard, predrilled stainless-steel or aluminum bars, approximately 1 by 1/8 inch thick; with anchors.

J. Fasteners: Factory-coated steel fasteners and metal or plastic plates complying with corrosion-resistance provisions, designed for fastening insulation to substrate, and acceptable to roofing system manufacturer.

K. Miscellaneous Accessories: Provide pourable sealers, preformed cone and vent sheet flashings, preformed inside and outside corner sheet flashings, reinforced EPDM securement strips, T-joint covers, in-seam sealants, termination reglets, cover strips, and other accessories.

2.3 ROOF INSULATION

A. General: Preformed roof insulation boards manufactured or approved by EPDM membrane roofing manufacturer, selected from manufacturer's standard sizes suitable for application, of thicknesses indicated.

B. Rigid Roof Insulation: Polyisocyanurate cellular insulation with 20 psi compressive strength, manufactured with closed cell foam core and manufacturer’s standard perforated glass reinforcing mat laminated to each face, meeting ASTM C 1289-11 Type II, Class 1, Grade 2.

C. Thermal Barrier: Treated Gypsum Core Type X, ASTM D 3273 and ASTM E 84, inorganic glass mat, water resistant treated gypsum core. Dens-Deck Prime Fireguard Roof Board by Georgia Pacific Corp. or approved equal.

D. Thermal Performance: Total system performance shall provide an R value of not less than 42.0. Polyisocyanurate board shall be based on a R value of not less the 5.6 per inch of thickness.

2.4 INSULATION ACCESSORIES

A. General: Furnish roof insulation accessories recommended by insulation manufacturer for intended use and compatibility with membrane roofing.

B. Fasteners: Factory-coated steel fasteners and metal or plastic plates complying with corrosion-resistance provisions in FM Approvals 4470, designed for fastening roof insulation to substrate, and acceptable to roofing system manufacturer.

C. Modified Asphaltic Insulation Adhesive: Insulation manufacturer's recommended modified asphalt, asbestos-free, cold-applied adhesive formulated to attach roof insulation to substrate or to another insulation layer.

D. Bead-Applied Insulation Adhesive: Insulation manufacturer's recommended bead-applied, low-rise, one- or multicomponent urethane adhesive formulated to attach roof insulation to substrate or to another insulation layer.

E. Full-Spread Applied Insulation Adhesive: Insulation manufacturer's recommended spray-applied, low-rise, two-component urethane adhesive formulated to attach roof insulation to substrate or to another insulation layer.

PART 3 - EXECUTION

3.1 EXAMINATION

A. Examine substrates, areas, and conditions, with Installer present, for compliance with the following requirements and other conditions affecting performance of roofing system:

1. Verify that roof openings and penetrations are in place and curbs are set and braced and that roof drain bodies are securely clamped in place.
2. Verify that wood blocking, curbs, and nailers are securely anchored to roof deck at penetrations and terminations and that nailers match thicknesses of insulation.
3. Verify that electrical conduit run within deck flutes is complete and ready for final roofing
4. Verify that surface plane flatness and fastening of steel roof deck complies with requirements in Division 05 Section "Steel Decking."
5. Check elevations to verify that the roof system will drain in accordance with the requirements of this section.
6. Report conditions which may interfere with installation of the roof or prevent proper drainage to the Construction Manager and Architect.
7. After the roof has been accepted by the roofer, the roofer shall be responsible for proper drainage of the entire roof system.

B. Proceed with installation only after unsatisfactory conditions have been corrected.

3.2 PREPARATION

A. Clean substrate of dust, debris, moisture, and other substances detrimental to roofing installation according to roofing system manufacturer's written instructions. Remove sharp projections.

B. Prevent materials from entering and clogging roof drains and conductors and from spilling or migrating onto surfaces of other construction. Remove roof-drain plugs when no work is taking place or when rain is forecast.

C. Complete terminations and base flashings and provide temporary seals to prevent water from entering completed sections of roofing system at the end of the workday or when rain is forecast. Remove and discard temporary seals before beginning work on adjoining roofing.

D. Install acoustical roof deck rib insulation strips, specified in Division 05 Section "Steel Decking," according to acoustical roof deck manufacturer's written instructions, immediately before installation of overlying construction and to remain dry.

3.3 GENERAL WORKMANSHIP

A. Lay out roof membrane sheets to ensure that water will flow over or parallel to, but never against, membrane lap seams.

B. Lap single-ply membrane sheets four (4) inches, minimum.

C. Application rates:
1. Membrane bonding adhesive: 45 to 60 square feet per gallon.
2. Splice adhesive: 75 feet per gallon (6-inch splice).
3. Lap sealant: 20 lineal feet per tube.
4. Water cut-off mastic: 10 lineal feet per tube (3/8-inch x 1/2-inch bead)

D. Membrane seaming (splice adhesive):
   1. At laps, fold the top sheet back twelve (12) inches to allow for cleaning and application of adhesive. Clean both surfaces with solvent and clean cotton rags. Allow to dry thoroughly.
   2. Apply splice adhesive evenly to both surfaces to create a 6 inch wide, minimum, seam. At membrane cross-seams, make one short back stroke to leave extra adhesive at the step-off. Allow splice adhesive to dry until tacky, and so as not to stick or string to the touch of a clean, dry finger.
   3. Fold surfaces together, then roll the entire lap splice using a 3 to 4-inch wide steel hand roller with positive pressure towards the outside edge of the lap, then over the entire lap surface.
   4. Allow the lap to cure for one (1) hour minimum, (optimum cure time is four (4) hours, however laps must be completed on the same day).
   5. Clean the membrane surface a minimum of one (1) inch on either side of the splice edge with solvent and a clean rag.
   6. Apply a continuous 3/8-inch x 1/4-inch bead of lap sealant centered over the lap edge. Feather the lap sealant immediately, ensuring to leave a mound of sealant directly over the lap edge.

E. Membrane seaming (splice tape):
   1. At laps, fold the top sheet back twelve (12) inches to allow for priming. Thoroughly scrub both surfaces with membrane primer using a scrub pad. Allow to dry thoroughly.
   2. Apply splice tape to bottom membrane sheet with the edge of the release paper along a line 1/8-inch to 1/2-inch out from edge of top sheet. Press tape onto sheet using hand pressure. Overlap tape ends a minimum of one (1) inch.
   3. Remove the release paper and press top sheet onto tape using hand pressure.
   4. Roll the entire lap with a two (2) inch wide steel roller.

F. Roof membrane and flashings shall be installed and sealed in a watertight manner on the same day of installation or before the arrival of inclement weather.

G. At the end of each work day, removal areas shall be sealed with water stops along edges to prevent water entry into the newly completed roof system.

H. Remove temporary tie-ins and water cut-off materials before proceeding with contiguous work. Overlap previous day’s work by twelve (12) inches, minimum

3.4 INSULATION INSTALLATION

A. Comply with membrane roofing system and insulation manufacturer's written instructions for installing roof insulation.

B. Install thermal barrier sheets over metal deck with mechanical fasteners designed to resist uplift forces products by wind speed of not less than 90 MPH.

C. Install waterproof underlayment membrane over thermal barrier sheets. Begin installation at lowest point of roof working in rows which lap preceding lower row.

D. Install insulation with long joints of insulation perpendicular to deck flutes in a continuous straight line with end joints staggered between rows, abutting edges and ends between boards. Fill gaps exceeding 1/4 inch with insulation.

1. Cut and fit insulation within 1/4 inch of nailers, projections, and penetrations.

2. Do not cantilever insulation edges over deck ribs. Minimum bearing surface = 1 ½ inches.

E. Install insulation under area of roofing to achieve required thickness. Install layers with joints of each succeeding layer staggered from joints of previous layer a minimum of 6 inches in each direction. Maximum insulation gap: ¼ inch

F. Trim surface of insulation where necessary at roof drains so completed surface is flush and does not restrict flow of water.

G. Adhered Insulation: Install each layer of insulation and secure to deck using adhesives specifically designed for fastening specified board-type roof insulation to deck type.

3.5 ADHERED MEMBRANE ROOFING INSTALLATION

A. Adhere membrane roofing over area to receive roofing according to membrane roofing system manufacturer's written instructions. Unroll membrane roofing and allow to relax before installing.

B. Start installation of membrane roofing in presence of membrane roofing system manufacturer's technical personnel.

C. Accurately align membrane roofing and maintain uniform side and end laps of minimum dimensions required by manufacturer. Stagger end laps.

D. Bonding Adhesive: Apply to substrate and underside of membrane roofing at rate required by manufacturer and allow to partially dry before installing membrane roofing. Do not apply to splice area of membrane roofing.

E. In addition to adhering, mechanically fasten membrane roofing securely at terminations, penetrations, and perimeters.

F. Apply membrane roofing with side laps shingled with slope of roof deck where possible.

G. Adhesive Seam Installation: Clean both faces of splice areas, apply splicing cement, and firmly roll side and end laps of overlapping membrane roofing according to manufacturer's written instructions to ensure a watertight seam installation. Apply lap sealant and seal exposed edges of membrane roofing terminations.

1. Apply a continuous bead of in-seam sealant before closing splice if required by membrane roofing system manufacturer.

H. Tape Seam Installation: Clean and prime both faces of splice areas, apply splice tape, and firmly roll side and end laps of overlapping membrane roofing according to manufacturer's written instructions to ensure a watertight seam installation. Apply lap sealant and seal exposed edges of membrane roofing terminations.

I. Repair tears, voids, and lapped seams in roofing that does not comply with requirements.

J. Spread sealant or mastic bed over deck drain flange at roof drains and securely seal membrane roofing in place with clamping ring.

K. Install membrane roofing and auxiliary materials to tie in to existing membrane roofing to maintain weather-tightness of transition and to not void warranty for existing membrane roofing system.

L. Adhere protection sheet over membrane roofing at locations indicated.

3.6 BASE FLASHING INSTALLATION

A. Install sheet flashings and preformed flashing accessories and adhere to substrates according to membrane roofing system manufacturer's written instructions.

B. Apply bonding adhesive to substrate and underside of sheet flashing at required rate and allow to partially dry. Do not apply to seam area of flashing.

C. Flash penetrations and field-formed inside and outside corners with cured or uncured sheet flashing.

D. Clean splice areas, apply splicing cement, and firmly roll side and end laps of overlapping sheets to ensure a watertight seam installation. Apply lap sealant and seal exposed edges of sheet flashing terminations.

E. Terminate and seal top of sheet flashings and mechanically anchor to substrate through termination bars.

3.7 FIELD QUALITY CONTROL

A. Final Roof Inspection: Arrange for roofing system manufacturer's technical personnel to inspect roofing installation on completion.

B. Repair or remove and replace components of membrane roofing system where inspections indicate that they do not comply with specified requirements.

C. Additional inspections, at Contractor's expense, may be performed to determine compliance of replaced or additional work with specified requirements.

3.8 PROTECTING AND CLEANING

A. Clean all surfaces, including roof drain assemblies, conductors, edges, etc. at the edn of each work day and at final completion of roof system.

B. Protect membrane roofing system from damage and wear during remainder of construction period. When remaining construction will not affect or endanger roofing, inspect roofing for deterioration and damage, describing its nature and extent in a written report, with copies to Architect and Owner.

C. Correct deficiencies in or remove membrane roofing system that does not comply with requirements, repair substrates and repair or reinstall membrane roofing system to a condition free of damage and deterioration at time of Substantial Completion and according to warranty requirements.
   1. Installation details noted as deficient during final review must be repaired and corrected by contractor and made ready for review within (5) five working days or as deemed necessary by Construction Manager.

D. Clean overspray and spillage from adjacent construction using cleaning agents and procedures recommended by manufacturer of affected construction.

END OF SECTION

SECTION 07 92 00 - JOINT SEALANTS

PART 1 - GENERAL

1.1 SUMMARY

A. This Section includes joint sealants for the following applications:

1. Exterior joints in vertical surfaces and horizontal nontraffic surfaces.
2. Exterior joints in horizontal traffic surfaces.
3. Interior joints in vertical surfaces and horizontal nontraffic surfaces.
4. Interior joints in horizontal traffic surfaces.

1.2 PERFORMANCE REQUIREMENTS

A. Provide elastomeric joint sealants that establish and maintain watertight and airtight continuous joint seals without staining or deteriorating joint substrates.

B. Provide joint sealants for interior applications that establish and maintain airtight and water-resistant continuous joint seals without staining or deteriorating joint substrates.

1.3 SUBMITTALS

A. Product Data: For each joint-sealant product indicated.

1.4 QUALITY ASSURANCE

A. Preconstruction Compatibility and Adhesion Testing: Submit samples of materials that will contact or affect joint sealants to joint-sealant manufacturers for testing according to ASTM C 1087 to determine whether priming and other specific joint preparation techniques are required to obtain rapid, optimum adhesion of joint sealants to joint substrates.

1.5 WARRANTY

A. Special Installer's Warranty: Installer's standard form in which Installer agrees to repair or replace elastomeric joint sealants that do not comply with performance and other requirements specified in this Section within specified warranty period.

1. Warranty Period: Five years from date of Substantial Completion.

PART 2 - PRODUCTS

2.1 MANUFACTURERS

A. Available Products: Subject to compliance with requirements, products that may be incorporated into the Work include, but are not limited to, products listed in other Part 2 articles.

B. Products: Subject to compliance with requirements, provide one of the products listed in other Part 2 articles.

2.2 MATERIALS, GENERAL

A. Compatibility: Provide joint sealants, backings, and other related materials that are compatible with one another and with joint substrates under conditions of service and application, as demonstrated by sealant manufacturer, based on testing and field experience.

B. VOC Content of Interior Sealants: Provide interior sealants and sealant primers that comply with the following limits for VOC content when calculated according to 40 CFR 59, Subpart D (EPA Method 24):

1. Sealants: 250 g/L.
2. Sealant Primers for Nonporous Substrates: 250 g/L.
3. Sealant Primers for Porous Substrates: 775 g/L.

C. Colors of Exposed Joint Sealants: As indicated by manufacturer's designations.

2.3 ELASTOMERIC JOINT SEALANTS

A. Elastomeric Sealants: Comply with ASTM C 920 and other requirements indicated for each liquid-applied chemically curing sealant specified, including those referencing ASTM C 920 classifications for type, grade, class, and uses related to exposure and joint substrates.

B. Stain-Test-Response Characteristics: Where elastomeric sealants are specified to be nonstaining to porous substrates, provide products that have undergone testing according to ASTM C 1248 and have not stained porous joint substrates indicated for Project.

C. Suitability for Immersion in Liquids. Where elastomeric sealants are indicated for Use I for joints that will be continuously immersed in liquids, provide products that have undergone testing according to ASTM C 1247 and qualify for the length of exposure indicated by reference to ASTM C 920 for Class 1 or 2. Liquid used for testing sealants is deionized water, unless otherwise indicated.

D. Suitability for Contact with Food: Where elastomeric sealants are indicated for joints that will come in repeated contact with food, provide products that comply with 21 CFR 177.2600.

E. Multicomponent Nonsag Urethane Sealant: Exterior Vertical Use;

1. Products:

a. Pecora Corporation; Dynatrol II.
b. Tremco; Dymeric 511.
c. Tremco; Vulkem 922.

2. Type and Grade: M (multicomponent) and NS (nonsag).
3. Class: 50.
4. Use[**s**] Related to Exposure: NT (nontraffic) and T (traffic).
5. Uses Related to Joint Substrates: M, [**G,**]A, and, as applicable to joint substrates indicated, O.

F. Multicomponent Pourable Urethane Sealant: Exterior and Interior Horizontal Use;

1. Products:
a. Pecora Corporation; Urexpan NR-200.
b. Tremco; THC-901.
c. Tremco; THC-900.
d. Tremco; Vulkem 245.
e. Pecora Corporation; Urexpan NR 300, Type H.
f. Pecora Corporation; Urexpan NR 300, Type M.

2. Type and Grade: M (multicomponent) and P (pourable).
3. Class: 25, 12-1/2.
4. Use Related to Exposure: T (traffic).
5. Uses Related to Joint Substrates: M, A, and, as applicable to joint substrates indicated, O.

G. Single-Component Nonsag Urethane Sealant: Interior Concrete and Masonry Vertical Use;

1. Products:
a. Pecora Corporation; Dynatrol I-XL.
b. Tremco; DyMonic.
c. Tremco; Vulkem 921.
d. Tremco; Vulkem 931.

2. Type and Grade: S (single component) and NS (nonsag).
3. Class: 25, 50, 100/50.
4. Use Related to Exposure: NT (nontraffic).
5. Uses Related to Joint Substrates: M, G, A, and, as applicable to joint substrates indicated, O.

2.4 LATEX JOINT SEALANTS

A. Latex Sealant: Interior Metal Vertical Use; Comply with ASTM C 834, Type O P, Grade NF.

B. Products:

1. Bostik Findley; Chem-Calk 600.
2. Pecora Corporation; AC-20+.
3. Tremco; Tremflex 834.

2.5 JOINT-SEALANT BACKING

A. General: Provide sealant backings of material and type that are nonstaining; are compatible with joint substrates, sealants, primers, and other joint fillers; and are approved for applications indicated by sealant manufacturer based on field experience and laboratory testing.

B. Cylindrical Sealant Backings: ASTM C 1330, Type C closed-cell material with a surface skin, and of size and density to control sealant depth and otherwise contribute to producing optimum sealant performance:

C. Elastomeric Tubing Sealant Backings: Neoprene, butyl, EPDM, or silicone tubing complying with ASTM D 1056, nonabsorbent to water and gas, and capable of remaining resilient at temperatures down to minus 26 deg F. Provide products with low compression set and of size and shape to provide a secondary seal, to control sealant depth, and to otherwise contribute to optimum sealant performance.

D. Bond-Breaker Tape: Polyethylene tape or other plastic tape recommended by sealant manufacturer for preventing sealant from adhering to rigid, inflexible joint-filler materials or joint surfaces at back of joint where such adhesion would result in sealant failure. Provide self-adhesive tape where applicable.

2.6 MISCELLANEOUS MATERIALS

A. Primer: Material recommended by joint-sealant manufacturer where required for adhesion of sealant to joint substrates indicated, as determined from preconstruction joint-sealant-substrate tests and field tests.

B. Cleaners for Nonporous Surfaces: Chemical cleaners acceptable to manufacturers of sealants and sealant backing materials, free of oily residues or other substances capable of staining or harming joint substrates and adjacent nonporous surfaces in any way, and formulated to promote optimum adhesion of sealants to joint substrates.

C. Masking Tape: Nonstaining, nonabsorbent material compatible with joint sealants and surfaces adjacent to joints.

PART 3 - EXECUTION

3.1 PREPARATION

A. Surface Cleaning of Joints: Clean out joints immediately before installing joint sealants.

1. Remove all foreign material from joint substrates that could interfere with adhesion of joint sealant.

    a. Clean porous joint substrate surfaces by brushing, grinding, blast cleaning, mechanical abrading, or a combination of these methods to produce a clean, sound substrate capable of developing optimum bond with joint sealants. Remove loose particles remaining after cleaning operations above by vacuuming or blowing out joints with oil-free compressed air.

2. Remove laitance and form-release agents from concrete.

   a. Clean nonporous surfaces with chemical cleaners or other means that do not stain, harm substrates, or leave residues capable of interfering with adhesion of joint sealants.

B. Joint Priming: Prime joint substrates**,** where recommended in writing by joint-sealant manufacturer, based on preconstruction joint-sealant-substrate tests or prior experience. Apply primer to comply with joint-sealant manufacturer's written instructions. Confine primers to areas of joint-sealant bond; do not allow spillage or migration onto adjoining surfaces.

C. Masking Tape: Use masking tape where required to prevent contact of sealant with adjoining surfaces that otherwise would be permanently stained or damaged by such contact or by cleaning methods required to remove sealant smears. Remove tape immediately after tooling without disturbing joint seal.

3.2 INSTALLATION

A. Sealant Installation Standard: Comply with recommendations in ASTM C 1193 for use of joint sealants as applicable to materials, applications, and conditions indicated.

B. Acoustical Sealant Application Standard: Comply with recommendations in ASTM C 919 for use of joint sealants in acoustical applications as applicable to materials, applications, and conditions indicated.

C. Install sealant backings of type indicated to support sealants during application and at position required to produce cross-sectional shapes and depths of installed sealants relative to joint widths that allow optimum sealant movement capability.

   1. Do not leave gaps between ends of sealant backings.
   2. Do not stretch, twist, puncture, or tear sealant backings.
   3. Remove absorbent sealant backings that have become wet before sealant application and replace them with dry materials.

D. Install bond-breaker tape behind sealants where sealant backings are not used between sealants and backs of joints.

E. Install sealants using proven techniques that comply with the following and at the same time backings are installed:

   1. Place sealants so they directly contact and fully wet joint substrates.
   2. Completely fill recesses in each joint configuration.
   3. Produce uniform, cross-sectional shapes and depths relative to joint widths that allow optimum sealant movement capability.

F. Tooling of Nonsag Sealants: Immediately after sealant application and before skinning or curing begins, tool sealants according to requirements specified below to form smooth, uniform beads of configuration indicated; to eliminate air pockets; and to ensure contact and adhesion of sealant with sides of joint.

   1. Remove excess sealant from surfaces adjacent to joints.

2. Use tooling agents that are approved in writing by sealant manufacturer and that do not discolor sealants or adjacent surfaces.
3. Provide concave joint configuration per Figure 5A in ASTM C 1193, unless otherwise indicated.

G. Installation of Preformed Silicone-Sealant System: Comply with manufacturer's written instructions.

H. Installation of Preformed Foam Sealants: Install each length of sealant immediately after removing protective wrapping, taking care not to pull or stretch material, producing seal continuity at ends, turns, and intersections of joints. For applications at low ambient temperatures where expansion of sealant requires acceleration to produce seal, apply heat to sealant in compliance with sealant manufacturer's written instructions.

I. Clean off excess sealant or sealant smears adjacent to joints as the Work progresses by methods and with cleaning materials approved in writing by manufacturers of joint sealants and of products in which joints occur.

END OF SECTION 07 92 00

SECTION 08 11 10 - STANDARD STEEL DOORS AND FRAMES

PART 1 - GENERAL

1.1 SUMMARY

A. This Section includes standard hollow-metal steel doors and frames.

1.2 SUBMITTALS

A. Product Data: Include construction details, material descriptions, core descriptions, label compliance, and finishes for each type of steel door and frame specified.

B. Shop Drawings: Provide a schedule of standard steel doors and frames using same reference numbers for details and openings as those on Drawings.

C. Product test reports.

1.3 DELIVERY, STORAGE, AND HANDLING

A. Deliver doors and frames palletized, wrapped, or crated to provide protection during transit and Project-site storage. Do not use nonvented plastic.

B. Deliver welded frames with two removable spreader bars across bottom of frames, tack welded to jambs and mullions.

PART 2 - PRODUCTS

2.1 MANUFACTURERS

A. Available Manufacturers: Subject to compliance with requirements, manufacturers offering products that may be incorporated into the Work include, but are not limited to, the following:

B. Manufacturers: Subject to compliance with requirements, provide products by one of the following:
1. .
2. Ceco Door Products; an ASSA ABLOY Group Company.
3. Curries Company; an ASSA ABLOY Group Company.
4. Kewanee Corporation (The).
5. LaForce.
6. Pioneer Industries, Inc.
7. Steelcraft; an Ingersoll-Rand Company.

2.2 MATERIALS

A. Cold-Rolled Steel Sheet: ASTM A 1008/A 1008M, Commercial Steel (CS), Type B; suitable for exposed applications.

B. Hot-Rolled Steel Sheet: ASTM A 1011/A 1011M, Commercial Steel (CS), Type B; free of scale, pitting, or surface defects; pickled and oiled.

C. Metallic-Coated Steel Sheet: ASTM A 653/A 653M, Commercial Steel (CS), Type B; with minimum A40 zinc-iron-alloy (galvannealed) coating designation.

D. Electrolytic Zinc-Coated Steel Sheet: ASTM A 591/A 591M, Commercial Steel (CS), Class B coating; mill phosphatized.

E. Supports and Anchors: After fabricating, galvanize units to be built into exterior walls according to ASTM A 153/A 153M, Class B.

F. Inserts, Bolts, and Fasteners: Provide items to be built into exterior walls, hot-dip galvanized according to ASTM A 153/A 153M.

G. Powder-Actuated Fasteners in Concrete: Fastener system of type suitable for application indicated, fabricated from corrosion-resistant materials, with clips or other accessory devices for attaching standard steel door frames of type indicated.

H. Mineral-Fiber Insulation: ASTM C 665, Type I (blankets without membrane facing); consisting of fibers manufactured from slag or rock wool with 6- to 12-lb/cu. ft. density; with maximum flame-spread and smoke-developed indexes of 25 and 50 respectively; passing ASTM E 136 for combustion characteristics.

I. Glazing: Comply with requirements in Division 8 Section "Glazing."

2.3 STANDARD STEEL DOORS

A. General: Provide doors of design indicated, not less than thickness indicated; fabricated with smooth surfaces, without visible joints or seams on exposed faces. Comply with ANSI A250.8.

1. Core Construction: Manufacturer's standard kraft-paper honeycomb, polystyrene, polyurethane, mineral-board, or vertical steel-stiffener core that produces doors complying with ANSI A250.8.
2. Vertical Edges for Single-Acting Doors: Square edge.
3. Top and Bottom Edges: Closed with flush or inverted 0.042 inch thick end closures or channels of same material as face sheets.

2.4 STANDARD STEEL FRAMES

A. General: Comply with ANSI A250.8 and with details indicated for type and profile.

B. Exterior Frames: Fabricated from metallic-coated steel sheet.

1. Fabricate frames with mitered or coped and welded face corners and seamless face joints.

C. Supports and Anchors: Fabricated from electrolytic zinc-coated or metallic-coated steel sheet.

D. Jamb Anchors: Masonry, stud-wall, compression, or postinstalled expansion type; not less than 0.042 inch thick.

E. Floor Anchors: Formed from same material as frames, not less than 0.042 inch thick.

F. Plaster Guards: Formed from same material as frames, not less than 0.016 inch thick.

2.5 STOPS AND MOLDINGS

A. Moldings for Glazed Lites in Doors: Minimum 0.032 inch thick, fabricated from same material as door face sheet in which they are installed.

B. Fixed Frame Moldings: Formed integral with standard steel frames, minimum 5/8 inch high, unless otherwise indicated.

C. Loose Stops for Glazed Lites in Frames: Minimum 0.032 inch thick, fabricated from same material as frames in which they are installed.

2.6 FABRICATION

A. General: Fabricate standard steel doors and frames to be rigid and free of defects, warp, or buckle. Accurately form metal to required sizes and profiles, with minimum radius for thickness of metal. Where practical, fit and assemble units in manufacturer's plant. To ensure proper assembly at Project site, clearly identify work that cannot be permanently factory assembled before shipment.

B. Standard Steel Doors:

1. Exterior Doors: Provide weep-hole openings in bottom of exterior doors to permit moisture to escape. Seal joints in top edges of doors against water penetration.
2. Glazed Lites: Factory cut openings in doors.

C. Standard Steel Frames: Where frames are fabricated in sections due to shipping or handling limitations, provide alignment plates or angles at each joint, fabricated of same thickness metal as frames.

1. Welded Frames: Weld flush face joints continuously; grind, fill, dress, and make smooth, flush, and invisible.
2. Sidelight and Transom Bar Frames: Provide closed tubular members with no visible face seams or joints; fabricated from same material as door frame. Fasten members at crossings and to jambs by butt welding.
3. Provide countersunk, flat- or oval-head exposed screws and bolts for exposed fasteners, unless otherwise indicated.
4. Plaster Guards: Weld guards to frame at back of hardware mortises in frames installed in concrete or masonry.
5. Floor Anchors: Weld anchors to bottom of jambs and mullions with at least four spot welds per anchor.
6. Jamb Anchors: Locate anchors not more than 18 inches from top and bottom of frame. Space anchors not more than 32 inches o.c.
7. Door Silencers: Except on weather-stripped doors, drill stops to receive door silencers as follows. Provide plastic plugs to keep holes clear during construction.

D. Hardware Preparation: Factory prepare standard steel doors and frames to receive templated mortised hardware; include cutouts, reinforcement, mortising, drilling, and tapping, according to the Door Hardware Schedule and templates furnished as specified in Division 8 Section "Door Hardware."

1. Comply with applicable requirements in ANSI A250.6 and ANSI/DHI A115 Series specifications for door and frame preparation for hardware. Locate hardware as indicated on Shop Drawings or, if not indicated, according to ANSI A250.8.

E. Stops and Moldings: Provide stops and moldings around glazed lites where indicated. Form corners of stops and moldings with butted or mitered hairline joints.

1. Provide fixed stops and moldings welded on secure side of door or frame.
2. Provide loose stops and moldings on inside of doors and frames.

2.7 FINISHES

A. Steel Finish: Factory priming for field-painted finish.

1. Shop Primer: Manufacturer's standard, fast-curing, lead- and chromate-free primer complying with ANSI A250.10 acceptance criteria.

PART 3 - EXECUTION

3.1 INSTALLATION

A. Remove welded-in shipping spreaders installed at factory.

B. Provide doors and frames of sizes, thicknesses, and designs indicated. Install standard steel doors and frames plumb, rigid, properly aligned, and securely fastened in place; comply with Drawings and manufacturer's written instructions.

C. Standard Steel Frames: Install standard steel frames for doors and other openings, of size and profile indicated. Comply with SDI 105.

1. Set frames accurately in position; plumbed, aligned, and braced securely until permanent anchors are set. After wall construction is complete, remove temporary braces, leaving surfaces smooth and undamaged.

a. At fire-protection-rated openings, install frames according to NFPA 80.
b. Apply bituminous coating to backs of frames that are filled with mortar, grout, and plaster containing antifreezing agents.

2. Metal-Stud Partitions: Solidly pack mineral-fiber insulation behind frames.
3. Masonry Walls: Coordinate installation of frames to allow for solidly filling space between frames and masonry with mortar as specified in Division 4 Section "Unit Masonry Assemblies."
4. Concrete Walls: Solidly fill space between frames and concrete with grout. Install grout in lifts and take precautions, including bracing frames, to ensure that frames are not deformed or damaged by grout forces.

D. Standard Steel Doors: Fit hollow-metal doors accurately in frames. Shim as necessary.

E. Glazing: Comply with installation requirements in Division 8 Section "Glazing" and with standard steel door and frame manufacturer's written instructions.

F. Final Adjustments: Check and readjust operating hardware items immediately before final inspection. Leave work in complete and proper operating condition. Remove and replace defective work, including standard steel doors or frames that are warped, bowed, or otherwise unacceptable.

G. Prime-Coat Touchup: Immediately after erection, sand smooth rusted or damaged areas of prime coat and apply touchup of compatible air-drying primer.

END OF SECTION 08 11 10

SECTION 08 36 14 – SECTIONAL OVERHEAD DOORS

PART 1 - GENERAL

1.1 SUMMARY

A. This Section includes standard insulated sectional overhead doors, electrical operators and controls, operating hardware, tracks and supports.

1.2 SUBMITTALS

A. Product Data: Include construction details, material descriptions, core descriptions, label compliance, and finishes for each type of steel door and frame specified.

B. Shop Drawings: Provide a schedule of standard steel doors and frames using same reference numbers for details and openings as those on Drawings.

C. Product test reports.

1.3 DELIVERY, STORAGE, AND HANDLING

A. Deliver doors and frames palletized, wrapped, or crated to provide protection during transit and Project-site storage. Do not use nonvented plastic.

B. Deliver welded frames with two removable spreader bars across bottom of frames, tack welded to jambs and mullions.

PART 2 - PRODUCTS

2.1 MANUFACTURERS

A. Manufacturers: Subject to compliance with requirements, provide products by one of the following:

1. Overhead Door Corporation; Thermacore AP Model 850 Series.
2. C.H.I. Overhead Doors.
3. Clopay Overhead Sectional Doors.
4. Haas Door Company.
5. Ideal Door, Div. of Clopay Corp.
6. Raynor Garage Doors, Dixon IL.

2.2 MATERIALS

A. Front and Back Slats: Zinc-Coated Steel Sheet, ASTM A 591/A 591M, Commercial Steel (CS), Class B coating; mill phosphatized.

B. Inserts, Bolts, and Fasteners: Provide items to be built into exterior walls, hot-dip galvanized according to ASTM A 153/A 153M.

C. Powder-Actuated Fasteners in Concrete: Fastener system of type suitable for application indicated, fabricated from corrosion-resistant materials, with clips or other accessory devices for attaching standard steel door frames of type indicated.

2.3 INSULATED SECTIONAL OVERHEAD DOORS

A. General: Provide complete operating door assemblies including frames, section, brackets, guides, tracks, counterbalance, hardware, electric operators and installation accessories as a complete unit from a single manufacture.

B. Sectional Door Panels:

1. Panel thickness: 3 inches.
2. Exterior Surface: Microgroove, texture.
3. Exterior Steel: 0.015 inches, hot dipped galvanized.
4. End Stiles: 16 gauge single end stiles. Thermal break to prevent heat/cold transfer.
5. Spring Counterbalance: Sized to weight of door with helically wound oil tempered torsion spring mounted on a steel shaft. Cable drum of diecast aluminum with high strength galvanized aircraft cable, sized with a factor of safety equal to 7:1.
6. Insulation: HCFC polyurethane, fully encapsulated in steel panel.
7. Thermal Value: R value equal to 26.0.
8. Finish and Color: Exterior and interior surfaces, two coats baked on polyester, white.

C. Accessories: Weather seals at jambs and head. Astragal at base.

D. Operating System: U L listed electric motor with ½ HP rating and auxiliary hand chain operator.

1. Electrical Requirements: 120 volt single phase.
2. Photoelectric sensors monitored to meet UL 325/2010.
3. Safety edge device extending full width of door bottom. Contact switch will stop downward travel and reverse direction to fully open position.
4. Photo eyes: Two pair interior jamb mounted thru-beam type photo eyes. NEMA 4 rated. One set low, one set high (60”).
5. Operator Controls: Push button operated control station with open, close and stop.

PART 3 - EXECUTION

3.1 INSTALLATION

A. Provide doors and frames of sizes, thicknesses, and designs indicated. Install rolling steel doors and frames plumb, rigid, properly aligned, and securely fastened in place; comply with Drawings and manufacturer's written instructions.

B. Install motor operator switches and connect to motor.

C. Final Adjustments: Check and readjust operating hardware items immediately before final inspection. Leave work in complete and proper operating condition. Remove and replace defective work, including rolling steel doors or frames that are warped, bowed, or otherwise unacceptable.

D. Prime-Coat Touchup: Immediately after erection, sand smooth rusted or damaged areas of prime coat and apply touchup of compatible air-drying primer.

END OF SECTION 08 36 14

SECTION 09 91 10 - EXTERIOR PAINTING

PART 1 - GENERAL

1.1 SUMMARY

A. This Section includes surface preparation and the application of paint systems on the following exterior substrates:

1. Steel.
2. Galvanized metal.
3. Plastic trim fabrications.

1.2 SUBMITTALS

A. Product Data: For each type of product indicated.

B. Samples: For each finish and for each color and texture required.

C. Product List: Printout of current "MPI Approved Products List" for each product category specified in Part 2, with the proposed product highlighted.

1.3 QUALITY ASSURANCE

A. MPI Standards:

1. Products: Complying with MPI standards indicated and listed in "MPI Approved Products List."
2. Preparation and Workmanship: Comply with requirements in "MPI Architectural Painting Specification Manual" for products and paint systems indicated.

1.4 EXTRA MATERIALS

A. Furnish extra materials described below that are from same production run (batch mix) as materials applied and that are packaged for storage and identified with labels describing contents.

1. Quantity: Furnish an additional 5 percent, but not less than 1 gal. of each material and color applied.

PART 2 - PRODUCTS

2.1 PAINT, GENERAL

A. Material Compatibility:

1. Provide materials for use within each paint system that are compatible with one another and substrates indicated, under conditions of service and application as demonstrated by manufacturer, based on testing and field experience.
2. For each coat in a paint system, provide products recommended in writing by manufacturers of topcoat for use in paint system and on substrate indicated.

B. Colors: Select color to match existing like materials.

2.2 PRIMERS/SEALERS

A. Alkali-Resistant Primer: MPI #3.

1. VOC Content: E Range of E1.

B. Bonding Primer (Water Based): MPI #17.

1. VOC Content: E Range of E1.

C. Bonding Primer (Solvent Based): MPI #69.

1. VOC Content: E Range of E1.

2.3 METAL PRIMERS

A. Alkyd Anticorrosive Metal Primer: MPI #79.

1. VOC Content: E Range of E1.

B. Quick-Drying Alkyd Metal Primer: MPI #76.

1. VOC Content: E Range of E1.

C. Waterborne Galvanized-Metal Primer: MPI #134.

1. VOC Content: E Range of E1.

2.4 EXTERIOR LATEX PAINTS

A. Exterior Latex (Flat): MPI #10 (Gloss Level 1).

1. VOC Content: E Range of E1.

B. Exterior Latex (Semigloss): MPI #11 (Gloss Level 5).

1. VOC Content: E Range of E1.

2.5 QUICK-DRYING ENAMELS

A. Quick-Drying Enamel (Semigloss): MPI #81 (Gloss Level 5).

1. VOC Content: E Range of E1.

B. Quick-Drying Enamel (High Gloss): MPI #96 (Gloss Level 7).

1. VOC Content: E Range of E1.

PART 3 - EXECUTION

3.1 EXAMINATION

A. Examine substrates and conditions, with Applicator present, for compliance with requirements for maximum moisture content and other conditions affecting performance of work.

B. Verify suitability of substrates, including surface conditions and compatibility with existing finishes and primers.

C. Begin coating application only after unsatisfactory conditions have been corrected and surfaces are dry.

1. Beginning coating application constitutes Contractor's acceptance of substrates and conditions.

3.2 PREPARATION AND APPLICATION

A. Comply with manufacturer's written instructions and recommendations in "MPI Architectural Painting Specification Manual" applicable to substrates and paint systems indicated.

B. Clean substrates of substances that could impair bond of paints, including dirt, oil, grease, and incompatible paints and encapsulants.

1. Remove incompatible primers and reprime substrate with compatible primers as required to produce paint systems indicated.

C. Apply paints to produce surface films without cloudiness, spotting, holidays, laps, brush marks, roller tracking, runs, sags, ropiness, or other surface imperfections. Cut in sharp lines and color breaks.

D. Protect work of other trades against damage from paint application. Correct damage to work of other trades by cleaning, repairing, replacing, and refinishing, as approved by Architect, and leave in an undamaged condition.

E. At completion of construction activities of other trades, touch up and restore damaged or defaced painted surfaces.

3.3 EXTERIOR PAINTING SCHEDULE

A. Steel Substrates:

1. Quick-Drying Enamel System: MPI EXT 5.1A.

   a. Prime Coat: Quick-drying alkyd metal primer.
   b. Intermediate Coat: Quick-drying enamel matching topcoat.
   c. Topcoat: Quick-drying enamel semigloss.

B. Galvanized-Metal Substrates:

1. Latex Over Water-Based Primer System: MPI EXT 5.3H.

   a. Prime Coat: Waterborne galvanized-metal primer.
   b. Intermediate Coat: Exterior latex matching topcoat.
   c. Topcoat: Exterior latex semigloss.

END OF SECTION 09 91 10

SECTION 09 91 20- INTERIOR PAINTING

PART 1 - GENERAL

1.1 SUMMARY

A. This Section includes surface preparation and the application of paint systems on the following interior substrates:
   1. Steel Door and Frames.
   2. Steel Wall Framing, girts, columns, bracing.
   3. Steel Ceiling Framing, beams, metal deck.

1.2 SUBMITTALS

A. Product Data: For each type of product indicated.

B. Samples: For each finish and for each color and texture required.

1.3 QUALITY ASSURANCE

A. MPI Standards:

   1. Products: Complying with MPI standards indicated and listed in "MPI Approved Products List."
   2. Preparation and Workmanship: Comply with requirements in "MPI Architectural Painting Specification Manual" for products and paint systems indicated.

PART 2 - PRODUCTS

2.1 PAINT, GENERAL

A. Material Compatibility:

   1. Provide materials for use within each paint system that are compatible with one another and substrates indicated, under conditions of service and application as demonstrated by manufacturer, based on testing and field experience.
   2. For each coat in a paint system, provide products recommended in writing by manufacturers of topcoat for use in paint system and on substrate indicated.

B. Chemical Components of Field-Applied Interior Paints and Coatings: Provide products that comply with the following limits for VOC content, exclusive of colorants added to a tint base, when calculated according to 40 CFR 59, Subpart D (EPA Method 24) and the following chemical restrictions; these requirements do not apply to primers or finishes that are applied in a fabrication or finishing shop:

1. Flat Paints and Coatings: VOC content of not more than 50 g/L.
2. Nonflat Paints and Coatings: VOC content of not more than 150 g/L.
3. Aromatic Compounds: Paints and coatings shall not contain more than 1.0 percent by weight of total aromatic compounds (hydrocarbon compounds containing one or more benzene rings).
4. Restricted Components: Paints and coatings shall not contain any of the following:

    a. Acrolein.
    b. Acrylonitrile.
    c. Antimony.
    d. Benzene.
    e. Butyl benzyl phthalate.
    f. Cadmium.
    g. Di (2-ethylhexyl) phthalate.
    h. Di-n-butyl phthalate.
    i. Di-n-octyl phthalate.
    j. 1,2-dichlorobenzene.
    k. Diethyl phthalate.
    l. Dimethyl phthalate.
    m. Ethylbenzene.
    n. Formaldehyde.
    o. Hexavalent chromium.
    p. Isophorone.
    q. Lead.
    r. Mercury.
    s. Methyl ethyl ketone.
    t. Methyl isobutyl ketone.
    u. Methylene chloride.
    v. Naphthalene.
    w. Toluene (methylbenzene).
    x. 1,1,1-trichloroethane.
    y. Vinyl chloride.

C. Colors: As selected by Owner from manufacturer's full range.

2.2 METAL PRIMERS

A. Rust-Inhibitive Primer (Water Based): MPI #107.

1. VOC Content: E Range of E1.
2. Environmental Performance Rating: EPR 1.

2.3 LATEX PAINTS

A. Latex (Flat): MPI #53 (Gloss Level 1).

1. VOC Content: E Range of E1.
2. Environmental Performance Rating: EPR 0.5.

PART 3 - EXECUTION

3.1 EXAMINATION

A. Examine substrates and conditions, with Applicator present, for compliance with requirements for maximum moisture content and other conditions affecting performance of work.

B. Verify suitability of substrates, including surface conditions and compatibility with existing finishes and primers.

C. Begin coating application only after unsatisfactory conditions have been corrected and surfaces are dry.

1. Beginning coating application constitutes Contractor's acceptance of substrates and conditions.

3.2 PREPARATION AND APPLICATION

A. Comply with manufacturer's written instructions and recommendations in "MPI Architectural Painting Specification Manual" applicable to substrates indicated.

B. Clean substrates of substances that could impair bond of paints, including dirt, oil, grease, and incompatible paints and encapsulants.

1. Remove incompatible primers and reprime substrate with compatible primers as required to produce paint systems indicated.

C. Apply paints to produce surface films without cloudiness, spotting, holidays, laps, brush marks, roller tracking, runs, sags, ropiness, or other surface imperfections. Cut in sharp lines and color breaks.

D. Protect work of other trades against damage from paint application. Correct damage to work of other trades by cleaning, repairing, replacing, and refinishing, as approved by Architect, and leave in an undamaged condition.

E. At completion of construction activities of other trades, touch up and restore damaged or defaced painted surfaces.

F. Steel Substrates: Hollow Meta Doors and Frames;

1. Quick-Drying Enamel System: MPI INT 5.1A.

a. Prime Coat: Quick-drying alkyd metal primer.
b. Intermediate Coat: Quick-drying enamel matching topcoat.
c. Topcoat: Quick-drying enamel.

G. Steel Substrates: Exposed Structural Steel and Metal Deck;
1. Waterborne Acrylic Eg-Shel Dryfall.
a. Prime Coat: One coat touch up primer as required Pro-Cryl Universal Metal Primer
b. Topcoat: One coat Pro Industrial Waterborne Acrylic Dry Fall Eg-Shel.

END OF SECTION 09 91 20

SECTION 31 10 00 - SITE CLEARING

PART 1 - GENERAL

1.1 RELATED DOCUMENTS

A. Drawings and general provisions of the Contract, including General and Supplementary Conditions and Division 01 Specification Sections, apply to this Section.

1.2 SUMMARY

A. Section Includes:

1. Removing above- and below-grade site improvements.
2. Disconnecting, capping or sealing, and removing site utilities.
3. Temporary erosion- and sedimentation-control measures.

B. Related Sections:

1. Section 02 41 19 "Selective Structure Demolition" for partial demolition of buildings or structures.

1.3 DEFINITIONS

A. Subsoil: All soil beneath the granular base material found below asphalt or concrete pavement.

B. Surface Soil: Soil that is the granular base material found below asphalt or concrete pavcement.

1.4 MATERIAL OWNERSHIP

A. Except for stripped topsoil and other materials indicated to be stockpiled or otherwise remain Owner's property, cleared materials shall become Contractor's property and shall be removed from Project site.

1.5 INFORMATIONAL SUBMITTALS

A. Record Drawings: Identifying and accurately showing locations of capped utilities and other subsurface structural, electrical, and mechanical conditions.

1.6 PROJECT CONDITIONS

A. Traffic: Minimize interference with adjoining roads, streets, walks, and other adjacent occupied or used facilities during site-clearing operations.

1. Do not close or obstruct streets, walks, or other adjacent occupied or used facilities without permission from Owner and authorities having jurisdiction.
2. Provide alternate routes around closed or obstructed traffic ways if required by Owner or authorities having jurisdiction.

B. Utility Locator Service: Notify Diggers Hotline for area where Project is located before beginning earth moving operations.

C. Do not commence site clearing operations until temporary erosion- and sedimentation-control measures are in place.

D. The following practices are prohibited within protection zones:

1. Storage of construction materials, debris, or excavated material.
2. Parking vehicles or equipment.
3. Foot traffic.
4. Erection of sheds or structures.
5. Impoundment of water.
6. Excavation or other digging unless otherwise indicated.

E. Prohibit heat sources, flames, ignition sources, and smoking within or near protection zones.

PART 2 - PRODUCTS

2.1 MATERIALS

A. Satisfactory Soil Material: Requirements for satisfactory soil material are specified in Section 31 20 00 "Earth Moving."

1. Obtain approved borrow soil material off-site when satisfactory soil material is not available on-site.

PART 3 - EXECUTION

3.1 PREPARATION

A. Protect and maintain benchmarks and survey control points from disturbance during construction.

B. Protect existing site improvements to remain from damage during construction.

1. Restore damaged improvements to their original condition, as acceptable to Owner.

3.2 TEMPORARY EROSION AND SEDIMENTATION CONTROL

A. Provide temporary erosion- and sedimentation-control measures to prevent soil erosion and discharge of soil-bearing water runoff into existing site storm drains.

B. Protect existing site storm drains by removing cover and inserting a temporary filter material and re-installing cover.

C. Verify that flows of water redirected from construction areas or generated by construction activity do not enter or cross protection zones.

D. Inspect, maintain, and repair erosion- and sedimentation-control measures during construction until permanent site paving work is complete.

E. Remove filter material after site paving work is complete.

3.3 EXISTING UTILITIES

A. Locate, identify, disconnect, and seal or cap utilities indicated to be removed.

1. Arrange with utility companies to shut off indicated utilities.
2. Owner will arrange to shut off indicated utilities when requested by Contractor.

B. Interrupting Existing Utilities: Do not interrupt utilities serving facilities occupied by Owner or others unless permitted under the following conditions and then only after arranging to provide temporary utility services according to requirements indicated:

1. Notify Engineer not less than two days in advance of proposed utility interruptions.
2. Do not proceed with utility interruptions without Engineer's written permission.

C. Excavate for and remove underground utilities indicated to be removed.

D. Removal of underground utilities is included in earthwork sections and with applicable fire suppression, plumbing, HVAC, electrical, communications, electronic safety and security and utilities sections and Section 02 41 19 "Selective Structure Demolition."

3.4 SITE IMPROVEMENTS

A. Remove existing above- and below-grade improvements as indicated and necessary to facilitate new construction.

B. Remove slabs, paving, curbs, gutters, and aggregate base as indicated.

1. Unless existing full-depth joints coincide with line of demolition, neatly saw-cut along line of existing pavement to remain before removing adjacent existing pavement. Saw-cut faces vertically.

2. Paint cut ends of steel reinforcement in concrete to remain with two coats of antirust coating, following coating manufacturer's written instructions. Keep paint off surfaces that will remain exposed.

3.5 DISPOSAL OF SURPLUS AND WASTE MATERIALS

A. Remove surplus soil material, obstructions, demolished materials, and waste materials including trash and debris, and legally dispose of them off Owner's property.

B. Separate recyclable materials produced during site clearing from other nonrecyclable materials. Store or stockpile without intermixing with other materials and transport them to recycling facilities. Do not interfere with other Project work.

END OF SECTION 31 10 00

SECTION 31 20 00 - EARTH MOVING

PART 1 - GENERAL

1.1 RELATED DOCUMENTS

A. Drawings and general provisions of the Contract, including General and Supplementary Conditions and Division 01 Specification Sections, apply to this Section.

1.2 SUMMARY

A. Section Includes:

1. Preparing subgrades for slabs-on-grade, walks, pavements, turf and grasses, and plants.
2. Excavating and backfilling for buildings and structures.
3. Drainage course for concrete slabs-on-grade.
4. Subbase course for concrete walks and pavements.
5. Subbase course and base course for asphalt paving.
6. Subsurface drainage backfill for walls and trenches.
7. Excavating and backfilling trenches for utilities and pits for buried utility structures.

B. Related Sections:

1. Section 03 30 00 "Cast-in-Place Concrete" for granular course if placed over vapor retarder and beneath the slab-on-grade.
2. Section 31 10 00 "Site Clearing" for site stripping, grubbing, stripping and stockpiling topsoil, and removal of above- and below-grade improvements and utilities.
3. Section 31 63 25 “Micro-Piles” for excavation to bottom of pile cap elevations.

1.3 DEFINITIONS

A. Backfill: Soil material or controlled low-strength material used to fill an excavation.

1. Initial Backfill: Backfill placed beside and over pipe in a trench, including haunches to support sides of pipe.
2. Final Backfill: Backfill placed over initial backfill to fill a trench.

B. Base Course: Aggregate layer placed between the subbase course and hot-mix asphalt paving.

C. Bedding Course: Aggregate layer placed over the excavated subgrade in a trench before laying pipe.

D. Borrow Soil: Satisfactory soil imported from off-site for use as fill or backfill.

E. Drainage Course: Aggregate layer supporting the slab-on-grade that also minimizes upward capillary flow of pore water.

F. Excavation: Removal of material encountered above subgrade elevations and to lines and dimensions indicated.

1. Authorized Additional Excavation: Excavation below subgrade elevations or beyond indicated lines and dimensions as directed by Engineer. Authorized additional excavation and replacement material will be paid for according to Contract provisions for unit prices or changes in the Work.
2. Unauthorized Excavation: Excavation below subgrade elevations or beyond indicated lines and dimensions without direction by Engineer. Unauthorized excavation, as well as remedial work directed by Engineer, shall be without additional compensation.

G. Fill: Soil materials used to raise existing grades.

H. Rock: Rock material in beds, ledges, unstratified masses, conglomerate deposits, and boulders of rock material 3/4 cu. yd. or more in volume that exceed a standard penetration resistance of 100 blows/2 inches when tested by a geotechnical testing agency, according to ASTM D 1586.

I. Structures: Buildings, footings, foundations, retaining walls, slabs, tanks, curbs, mechanical and electrical appurtenances, or other man-made stationary features constructed above or below the ground surface.

J. Subbase Course: Aggregate layer placed between the subgrade and base course for hot-mix asphalt pavement, or aggregate layer placed between the subgrade and a cement concrete pavement or a cement concrete or hot-mix asphalt walk.

K. Subgrade: Uppermost surface of an excavation or the top surface of a fill or backfill immediately below subbase, drainage fill, drainage course, or topsoil materials.

L. Utilities: On-site underground pipes, conduits, ducts, and cables, as well as underground services within buildings.

1.4 ACTION SUBMITTALS

A. Product Data: For each type of the following manufactured products required:

1. Controlled low-strength material, including design mixture.
2. Non-Detectable Warning Tape
3. Tracer Wire.

B. Samples for Verification: For the following products, in sizes indicated below:

1. Non-Detectable Warning Tape: 12 inches long; of each color.

1.5 INFORMATIONAL SUBMITTALS

A. Qualification Data: For qualified testing agency.

B. Material Test Reports: For each on-site and borrow soil material proposed for fill and backfill as follows:

1. Classification according to ASTM D 2487.
2. Laboratory compaction curve according to ASTM D 698.

C. Pre-excavation Photographs or Videotape: Show existing conditions of adjoining construction and site improvements, including finish surfaces, that might be misconstrued as damage caused by earth moving operations. Submit before earth moving begins.

1.6 QUALITY ASSURANCE

A. Geotechnical Testing Agency Qualifications: Qualified according to ASTM E 329 and ASTM D 3740 for testing indicated.

A. Pre-excavation Conference: Conduct conference at a location determined by the Engineer, or Owner if requested.

1.7 PROJECT CONDITIONS

A. Traffic: Minimize interference with adjoining roads, streets, walks, and other adjacent occupied or used facilities during earth moving operations.

1. Do not close or obstruct streets, walks, or other adjacent occupied or used facilities without permission from Owner and authorities having jurisdiction.
2. Provide alternate routes around closed or obstructed traffic ways if required by Owner or authorities having jurisdiction.

B. Utility Locator Service: Notify Diggers Hotline for area where Project is located before beginning earth moving operations.

C. Do not commence earth moving operations until temporary erosion- and sedimentation-control measures, specified in Section 31 10 00 "Site Clearing," are in place.

D. The following practices are prohibited within protection zones:

1. Storage of construction materials, debris, or excavated material.
2. Parking vehicles or equipment.
3. Foot traffic.
4. Erection of sheds or structures.
5. Impoundment of water.
6. Excavation or other digging unless otherwise indicated.

E. Prohibit heat sources, flames, ignition sources, and smoking within or near protection zones.

PART 2 - PRODUCTS

2.1 SOIL MATERIALS

A. General: Provide borrow soil materials when sufficient satisfactory soil materials are not available from excavations.

B. Satisfactory Soils: Soil Classification Groups GW, GP, GM, SW, SP, and SM according to ASTM D 2487 or a combination of these groups; free of rock or gravel larger than 3 inches in any dimension, debris, waste, frozen materials, vegetation, and other deleterious matter.

C. Unsatisfactory Soils: Soil Classification Groups GC, SC, CL, ML, OL, CH, MH, OH, and PT according to ASTM D 2487 or a combination of these groups.

1. Unsatisfactory soils also include satisfactory soils not maintained within 2 percent of optimum moisture content at time of compaction.

D. Subbase Material: Naturally or artificially graded mixture of natural or crushed gravel, crushed stone, and natural or crushed sand; ASTM D 2940; with at least 90 percent passing a 1-1/2-inch sieve and not more than 12 percent passing a No. 200 sieve.

E. Base Course: Naturally or artificially graded mixture of natural or crushed gravel, crushed stone, and natural or crushed sand; ASTM D 2940; with at least 95 percent passing a 1-1/2-inch sieve and not more than 8 percent passing a No. 200 sieve.

F. Engineered Fill: Naturally or artificially graded mixture of natural or crushed gravel, crushed stone, and natural or crushed sand; ASTM D 2940; with at least 90 percent passing a 1-1/2-inch sieve and not more than 12 percent passing a No. 200 sieve.

G. Bedding Course: Naturally or artificially graded mixture of natural or crushed gravel, crushed stone, and natural or crushed sand; ASTM D 2940; except with 100 percent passing a 1-inch sieve and not more than 8 percent passing a No. 200 sieve.

H. Drainage Course: Narrowly graded mixture of washed crushed stone, or crushed or uncrushed gravel; ASTM D 448; coarse-aggregate grading Size 57; with 100 percent passing a 1-1/2-inch sieve and 0 to 5 percent passing a No. 8 sieve.

I. Filter Material: Narrowly graded mixture of natural or crushed gravel, or crushed stone and natural sand: ASTM D 448; course-aggregate grading Size 67; with 100 percent passing a 1-inch sieve and 0 to 5 percent passing a No. 4 sieve.

J. Sand: ASTM C 33; fine aggregate.

K. Impervious Fill: Clayey gravel and sand mixture capable of compacting to a dense state.

2.2 ACCESSORIES

A. General: Non-detectable warning tape shall be installed on all utility mainline systems, branches, and building service laterals, regardless of what type of pipe/wire they are constructed with. Tracer wire shall also be installed on utility mainline systems, branches, and building service laterals, but only when they are constructed with non-metallic pipe.

B. Non-Detectable Warning Tape: The tape shall be acid- and alkali-resistant, polyethylene file warning tape manufactured for marking and identifying underground utilities, a minimum of 3 inches wide and 4 mils thick. The tape shall be continuously inscribed with a description of the utility, and colored as follows:

1. Red: Electric.
2. Yellow: Gas, Oil, Steam, and Dangerous Materials.
3. Orange: Telephone, CATV Cable, Fiber Optic, and Other Communication Lines.
4. Blue: Water Systems.
5. Green: Sewer Systems.

C. Tracer Wire: The wire shall be a minimum of 10-guage solid wire with a solid PVC insulation coating suitable for underground installation. The wire shall be rated for wet conditions. The wire insulation color shall conform to the uniform color code adopted by the American National Standard Institute. Tracer wire shall be colored as follows:

1. Yellow: Gas, Oil, Steam, and Dangerous Materials.
2. Blue: Water Systems.
3. Green: Sewer Systems.

PART 3 - EXECUTION

3.1 PREPARATION

A. Protect structures, utilities, sidewalks, pavements, and other facilities from damage caused by settlement, lateral movement, undermining, washout, and other hazards created by earth moving operations.

B. Protect and maintain erosion and sedimentation controls during earth moving operations.

C. Protect subgrades and foundation soils from freezing temperatures and frost. Remove temporary protection before placing subsequent materials.

3.2 DEWATERING

A. Prevent surface water and ground water from entering excavations, from ponding on prepared subgrades, and from flooding Project site and surrounding area.

B. Protect subgrades from softening, undermining, washout, and damage by rain or water accumulation.

1. Reroute surface water runoff away from excavated areas. Do not allow water to accumulate in excavations. Do not use excavated trenches as temporary drainage ditches.

3.3 EXPLOSIVES

A. Explosives: Do not use explosives.

3.4 EXCAVATION, GENERAL

A. Classified Excavation: Excavate to subgrade elevations. Material to be excavated will be classified as earth and rock. Do not excavate rock until it has been classified and cross sectioned by Engineer. The Contract Sum will be adjusted for rock excavation according to unit prices included in the Contract Documents. Changes in the Contract Time may be authorized for rock excavation.

1. Earth excavation includes excavating pavements and obstructions visible on surface; underground structures, utilities, and other items indicated to be removed; together with soil, boulders, and other materials not classified as rock or unauthorized excavation.

a. Intermittent drilling; blasting, if permitted; ram hammering; or ripping of material not classified as rock excavation is earth excavation.

2. Rock excavation includes removal and disposal of rock. Remove rock to lines and subgrade elevations indicated to permit installation of permanent construction without exceeding the following dimensions:

a. 24 inches outside of concrete forms other than at footings.
b. 12 inches outside of concrete forms at footings.
c. 6 inches outside of minimum required dimensions of concrete cast against grade.
d. Outside dimensions of concrete walls indicated to be cast against rock without forms or exterior waterproofing treatments.
e. 6 inches beneath bottom of concrete slabs-on-grade.
f. 6 inches beneath pipe in trenches, and the greater of 24 inches wider than pipe or 42 inches wide.

3.5 EXCAVATION FOR STRUCTURES

A. Excavate to indicated elevations and dimensions within a tolerance of plus or minus 1 inch. If applicable, extend excavations a sufficient distance from structures for placing and removing concrete formwork, for installing services and other construction, and for inspections.

1. Excavations for Footings and Foundations: Do not disturb bottom of excavation. Excavate by hand to final grade just before placing concrete reinforcement. Trim bottoms to required lines and grades to leave solid base to receive other work.

2. Micro-Pile Foundations: Stop excavations at top of pile cap before piles are placed. After piles have been installed, remove loose and displaced material. Excavate to final grade, leaving solid base to receive concrete strip wall footings.
3. Excavation for Basins, and Mechanical or Electrical Utility Structures: Excavate to elevations and dimensions indicated within a tolerance of plus or minus 1 inch. Do not disturb bottom of excavations intended as bearing surfaces.

3.6 EXCAVATION FOR WALKS AND PAVEMENTS

A. Excavate surfaces under walks and pavements to indicated lines, cross sections, elevations, and subgrades.

3.7 EXCAVATION FOR UTILITY TRENCHES

A. Excavate trenches to indicated gradients, lines, depths, and elevations.

1. Beyond building perimeter, excavate trenches to allow installation of top of pipe below frost line.

B. Excavate trenches to uniform widths to provide the following clearance on each side of pipe or conduit. Excavate trench walls vertically from trench bottom to 12 inches higher than top of pipe or conduit unless otherwise indicated.

1. Clearance: 12 inches each side of pipe or conduit.

C. Trench Bottoms: Excavate trenches 4 inches deeper than bottom of pipe and conduit elevations to allow for bedding course. Hand-excavate deeper for bells of pipe.

1. Excavate trenches 6 inches (150 mm) deeper than elevation required in rock or other unyielding bearing material to allow for bedding course.

3.8 SUBGRADE INSPECTION

A. Notify Geotechnical Engineer when excavations have reached required subgrade.

B. If Geotechnical Engineer determines that unsatisfactory soil is present, continue excavation and replace with compacted backfill or fill material as directed.

C. Proof-roll subgrade below the building slabs and pavements with a pneumatic-tired and loaded 10-wheel, tandem-axle dump truck weighing not less than 15 tons to identify soft pockets and areas of excess yielding. Do not proof-roll wet or saturated subgrades.

1. Completely proof-roll subgrade in one direction, repeating proof-rolling in direction perpendicular to first direction. Limit vehicle speed to 3 mph.
2. Excavate soft spots, unsatisfactory soils, and areas of excessive pumping or rutting, as determined by Engineer, and replace with compacted backfill or fill as directed.

D. Authorized additional excavation and replacement material will be paid for according to Contract provisions for unit prices or changes in the Work.

E. Reconstruct subgrades damaged by freezing temperatures, frost, rain, accumulated water, or construction activities, as directed by Engineer, without additional compensation.

3.9 UNAUTHORIZED EXCAVATION

A. Fill unauthorized excavation under foundations or wall footings by extending bottom elevation of concrete foundation or footing to excavation bottom, without altering top elevation. Lean concrete fill, with 28-day compressive strength of 2500 psi, may be used when approved by Engineer.

1. Fill unauthorized excavations under other construction, pipe, or conduit as directed by Engineer.

3.10 STORAGE OF SOIL MATERIALS

A. Stockpile borrow soil materials and excavated satisfactory soil materials without intermixing. Place, grade, and shape stockpiles to drain surface water. Cover to prevent windblown dust.

1. Stockpile soil materials away from edge of excavations. Do not store within drip line of remaining trees.

3.11 BACKFILL

A. Place and compact backfill in excavations promptly, but not before completing the following:

1. Construction below finish grade including, where applicable, subdrainage, dampproofing, waterproofing, and perimeter insulation.
2. Surveying locations of underground utilities for Record Documents.
3. Testing and inspecting underground utilities.
4. Removing concrete formwork.
5. Removing trash and debris.
6. Removing temporary shoring and bracing, and sheeting.
7. Installing permanent or temporary horizontal bracing on horizontally supported walls.

B. Place backfill on subgrades free of mud, frost, snow, or ice.

3.12 UTILITY TRENCH BACKFILL

A. Place backfill on subgrades free of mud, frost, snow, or ice.

B. Place and compact bedding course on trench bottoms and where indicated. Shape bedding course to provide continuous support for bells, joints, and barrels of pipes and for joints, fittings, and bodies of conduits.

C. Trenches under Footings: Backfill trenches excavated under footings and within 18 inches of bottom of footings with satisfactory soil; fill with concrete to elevation of bottom of footings. Concrete is specified in Section 03 30 00 "Cast-in-Place Concrete".

D. Trenches under Roadways: Provide 4-inch thick, concrete-base slab support for piping or conduit less than 30 inches below surface of roadways. After installing and testing, completely encase piping or conduit in a minimum of 4 inches of concrete before backfilling or placing roadway subbase course. Concrete is specified in Section 03 30 00 "Cast-in-Place Concrete".

E. Backfill voids with satisfactory soil while removing shoring and bracing.

F. Place and compact initial backfill of subbase material, free of particles larger than 1 inch in any dimension, to a height of 12 inches over the pipe or conduit.

1. Carefully compact initial backfill under pipe haunches and compact evenly up on both sides and along the full length of piping or conduit to avoid damage or displacement of piping or conduit. Coordinate backfilling with utilities testing.

G. Controlled Low-Strength Material: Place initial backfill of controlled low-strength material to a height of 12 inches over the pipe or conduit. Coordinate backfilling with utilities testing.

H. Place and compact final backfill of satisfactory soil to final subgrade elevation.

I. Controlled Low-Strength Material: Place final backfill or controlled low-strength material to final subgrade elevation.

J. Install non-detectable warning tape on all utility mainline systems, branches, and building service laterals, regardless of what type of pipe/wire they are constructed with. Also install tracer wire on utility mainline systems, branches, and building service laterals, but only when they are constructed with non-metallic pipe.

1. Continuous underground non-detectable warning tape shall be installed along the entire length of all utilities during backfilling of trench. Locate tape directly above utility, 12-16 inches below finished grade, except 6 inches below subgrade under pavements and slabs.

2. Tracer wire shall be installed along the entire length of all non-metallic pipe and taped on the top of the pipe at 10-foot intervals. The wire shall be located directly above and within 6 inches of the pipe at all times. Wire shall surface every 300 to 400 feet on the main line. Wire shall typically surface at hydrants, sewer structures, and lateral ends in a wire location box. An extra 18” of wire shall be provided at its termination point. Splices shall be held to a minimum. Where a splice is necessary, it shall be as shown in File No. 24B of the Standard Specifications. Conductivity of wire shall be tested prior to acceptance of pipe installation.

3.13 SOIL FILL

A. Plow, scarify, bench, or break up sloped surfaces steeper than 1 vertical to 4 horizontal so fill material will bond with existing material.

B. Place and compact fill material in layers to required elevations as follows:

1. Under walks and pavements, use satisfactory soil material.
2. Under steps and ramps, use engineered fill.
3. Under building slabs, use engineered fill.
4. Under footings and foundations, use engineered fill.

C. Place soil fill on subgrades free of mud, frost, snow, or ice.

3.14 SOIL MOISTURE CONTROL

A. Uniformly moisten or aerate subgrade and each subsequent fill or backfill soil layer before compaction to within 2 percent of optimum moisture content.

1. Do not place backfill or fill soil material on surfaces that are muddy, frozen, or contain frost or ice.
2. Remove and replace, or scarify and air dry, otherwise satisfactory soil material that exceeds optimum moisture content by 2 percent and is too wet to compact to specified dry unit weight.

3.15 COMPACTION OF SOIL BACKFILLS AND FILLS

A. Place backfill and fill soil materials in layers not more than 8 inches in loose depth for material compacted by heavy compaction equipment, and not more than 4 inches in loose depth for material compacted by hand-operated tampers.

B. Place backfill and fill soil materials evenly on all sides of structures to required elevations, and uniformly along the full length of each structure.

C. Compact soil materials to not less than the following percentages of maximum dry unit weight according to ASTM D 698:

1. Under structures, building slabs, steps, and pavements, scarify and recompact top 12 inches of existing subgrade and each layer of backfill or fill soil material at 95 percent.
2. Under walkways, scarify and recompact top 6 inches below subgrade and compact each layer of backfill or fill soil material at 92 percent.
3. Under turf or unpaved areas, scarify and recompact top 6 inches below subgrade and compact each layer of backfill or fill soil material at 85 percent.
4. For utility trenches, compact each layer of initial and final backfill soil material at 85 percent.

3.16 GRADING

A. General: Uniformly grade areas to a smooth surface, free of irregular surface changes. Comply with compaction requirements and grade to cross sections, lines, and elevations indicated.

1. Provide a smooth transition between adjacent existing grades and new grades.
2. Cut out soft spots, fill low spots, and trim high spots to comply with required surface tolerances.

B. Site Rough Grading: Slope grades to direct water away from buildings and to prevent ponding. Finish subgrades to required elevations within the following tolerances:

1. Walks: Plus or minus 1 inch.
2. Pavements: Plus or minus 1/2 inch

C. Grading inside Building Lines: Finish subgrade to a tolerance of 1/2 inch when tested with a 10-foot straightedge.

3.17 SUBBASE AND BASE COURSES UNDER PAVEMENTS AND WALKS

A. Place subbase course and base course on subgrades free of mud, frost, snow, or ice.

B. On prepared subgrade, place subbase course and base course under pavements and walks as follows:

1. Place base course material over subbase course under hot-mix asphalt pavement.
2. Shape subbase course and base course to required crown elevations and cross-slope grades.
3. Place subbase course and base course 6 inches or less in compacted thickness in a single layer.
4. Place subbase course and base course that exceeds 6 inches in compacted thickness in layers of equal thickness, with no compacted layer more than 6 inches thick or less than 3 inches thick.
5. Compact subbase course and base course at optimum moisture content to required grades, lines, cross sections, and thickness to not less than 95 percent of maximum dry unit weight according to ASTM D 698.

C. Pavement Shoulders: Place shoulders along edges of subbase course and base course to prevent lateral movement. Construct shoulders, at least 12 inches wide, of satisfactory soil materials and compact simultaneously with each subbase and base layer to not less than 95 percent of maximum dry unit weight according to ASTM D 698.

3.18 DRAINAGE COURSE UNDER CONCRETE SLABS-ON-GRADE

A. Place drainage course on subgrades free of mud, frost, snow, or ice.

B. On prepared subgrade, place and compact drainage course under cast-in-place concrete slabs-on-grade as follows:

1. Place drainage course 6 inches or less in compacted thickness in a single layer.
2. Place drainage course that exceeds 6 inches in compacted thickness in layers of equal thickness, with no compacted layer more than 6 inches thick or less than 3 inches thick.
3. Compact each layer of drainage course to required cross sections and thicknesses to not less than 95 percent of maximum dry unit weight according to ASTM D 698.

3.19 FIELD QUALITY CONTROL

A. Special Inspections: Owner will engage a qualified special inspector to perform the following special inspections:

1. Determine prior to placement of fill that site has been prepared in compliance with requirements.
2. Determine that fill material and maximum lift thickness comply with requirements.
3. Determine, at the required frequency, that in-place density of compacted fill complies with requirements.

B. Testing Agency: Owner will engage a qualified Geotechnical Engineering testing agency to perform tests and inspections.

C. Allow testing agency to inspect and test subgrades and each fill or backfill layer. Proceed with subsequent earth moving only after test results for previously completed work comply with requirements.

D. Footing Subgrade: At footing subgrades, at least one test of each soil stratum will be performed to verify design bearing capacities. Subsequent verification and approval of other footing subgrades may be based on a visual comparison of subgrade with tested subgrade when approved by Engineer.

E. Testing agency will test compaction of soils in place according to ASTM D 1556, ASTM D 2167, ASTM D 2922, and ASTM D 2937, as applicable. Tests will be performed at the following locations and frequencies:

1. Paved and Building Slab Areas: At subgrade and at each compacted fill and backfill layer, at least one test for every 2000 sq. ft. or less of paved area or building slab, but in no case fewer than three tests.
2. Foundation Wall Backfill: At each compacted backfill layer, at least one test for every 100 feet or less of wall length, but no fewer than two tests.
3. Trench Backfill: At each compacted initial and final backfill layer, at least one test for every 150 feet or less of trench length, but no fewer than two tests.

F. When testing agency reports that subgrades, fills, or backfills have not achieved degree of compaction specified, scarify and moisten or aerate, or remove and replace soil materials to depth required; recompact and retest until specified compaction is obtained.

3.20 PROTECTION

A. Protecting Graded Areas: Protect newly graded areas from traffic, freezing, and erosion. Keep free of trash and debris.

B. Repair and reestablish grades to specified tolerances where completed or partially completed surfaces become eroded, rutted, settled, or where they lose compaction due to subsequent construction operations or weather conditions.

1. Scarify or remove and replace soil material to depth as directed by Engineer; reshape and recompact.

C. Where settling occurs before Project correction period elapses, remove finished surfacing, backfill with additional soil material, compact, and reconstruct surfacing.

1. Restore appearance, quality, and condition of finished surfacing to match adjacent work, and eliminate evidence of restoration to greatest extent possible.

3.21 DISPOSAL OF SURPLUS AND WASTE MATERIALS

A. Transport surplus satisfactory soil to designated storage areas on Owner's property. Stockpile or spread soil as directed by Engineer.

B. At project completion, remove surplus satisfactory soil, topsoil, and waste materials, including unsatisfactory soil, trash, and debris, from the project site and legally dispose of them off Owner's property.

END OF SECTION 31 20 00

SECTION 31 63 25 – MICRO-PILES

PART 1 - GENERAL

1.1 RELATED DOCUMENTS

A. Drawings and General Provisions of the Contract, including General and Supplementary Conditions and Division 01 Specification Sections apply to this section.
B. Comply with Wisconsin Commercial Building Codes/International Building Code (IBC).
C. Comply with Americans with Disabilities Architectural Guidelines, and ICC/ANSI A117.1-Latest Edition.

1.2 SECTION INCLUDES

1. The section includes micro-piles which are small diameter, drilled and grouted non-displacement piles, reinforced with hollow rods.
2. Final excavation work from top of pile cap elevation to bottom of pile cap elevation.

1.3 RELATED SECTIONS

A. Division 3 Section Cast in Place Concrete for length, width and depth of concrete pile caps.
B. Division 31 Section "Site Clearing" for preparation of subgrade for micro-pile operations including removal of vegetation, topsoil, debris, obstructions, and deleterious materials from ground surface.

1.4 PERFORMANCE REQUIREMENTS

A. Structural Design: Contractor shall retain a registered structural Engineer to design micro-pile system components. Engineer shall prepare structural calculations and supervise preparation of shop drawings.

B. Design Criteria: Micro-piles shall be designed to support compression and tension loads indicated, comply with minimum hollow rod size specified and provide a geotechnical capacity factor of safety not less than 3.0.

1.5 ACTION SUBMITTALS

A. Submit in accordance with Section 01 33 00 – Submittal Procedures.
B. Product Data: For each type of product indicated.
C. Shop Drawings: Provide location plan, rod size, rod load capacity, embedment depth, compression capacity and tension capacity. Include pile bearing plate of size and elevation indicated.
D. Structural Calculations: Furnish calculations to evaluate allowable capacity of cased length, allowable capacity of uncased length, superimposed design load requirements, geotechnical capacity of micro-pile, bearing plate connection to pile cap.
E. Record Location Plan: For installed piles submit a record location plan that illustrates the location of each pile within each pile cap. Include pile bearing plate and bottom elevations for each pile.

1.6 INFORMATIONAL SUBMITTALS

A. Qualification Data: For qualified Installer and testing agency.
B. Material Certificates: For the following, from manufacturer:

1. Hollow steel rod yield strength.

C. Field quality-control reports.

1.7 QUALITY ASSURANCE

A. Installer Qualifications: An experienced installer that has specialized in micro-pile work.
B. Testing Agency Qualifications: Qualified according to ASTM C 1077, ASTM D 3740, and ASTM E 329 for testing indicated.

C. Pre-installation Conference: Conduct conference at Project site.

1. Review methods and procedures related to micro piles including, but not limited to, the following:

a. Review geotechnical report with Contractor representative.
b. Review rough and final excavation work with Contractor and Excavation Contractor.
c. Discussion of installation sequence.
d. Review coordination with temporary controls and protections.
e. Removal of excavated material from the project site.

1.8 PROJECT CONDITIONS

A. Existing Utilities: Locate existing underground utilities before installation of piles. If utilities are to remain in place, provide protection from damage during pile operations.

1. Should uncharted or incorrectly charted piping or other utilities be encountered during excavation, adapt drilling procedure if necessary to prevent damage to utilities. Cooperate with Owner and utility companies in keeping services and facilities in operation without interruption. Repair damaged utilities to satisfaction of utility Owner.

B. Interruption of Existing Utilities: Do not interrupt any utility to facilities occupied by Owner or others unless permitted under the following conditions and then only after arranging to provide temporary utility according to requirements indicated:

1. Notify Engineer and Owner no fewer than 14 days in advance of proposed interruption of utility.
2. Do not proceed with interruption of utility without Owner's written permission.

C. Project-Site Information: A geotechnical report has been prepared for this Project and is available for information only. The opinions expressed in this report are those of geotechnical engineer and represent interpretations of subsoil conditions, tests, and results of analyses conducted by geotechnical engineer. Owner will not be responsible for interpretations or conclusions drawn from this data.

1. Make additional test borings and conduct other exploratory operations necessary for piles.
2. The geotechnical report is referenced elsewhere in the Project Manual.

D. Survey Work: Engage a qualified land surveyor to perform surveys, layouts, and measurements for piles. Before final excavating, lay out each pile to lines and levels required. After pile installation record actual measurements of each pile location, shaft diameter, bottom and top elevations, deviations from specified tolerances, and other specified data.

1. Record and maintain information pertinent to each pile and cooperate with Contractor to provide data for required reports.

PART 2 - PRODUCTS

2.1 STEEL REINFORCEMENT

A. Hollow Micro-Pile Rod: Rod size shall be not less than size indicated on drawings or less than as required by Contractor's design for loads indicated.
B. Coupling Nut: Furnish size to match each hollow rod section.
C. Spacer: Furnish space at each joined section length.
D. Hollow Flushing Section: Furnish as required to inject grout and flush cuttings from bore hole.
E. Bearing Plate: Plate size shall be not less than thickness and size indicated on drawings.
F. Collar Nut: Furnish collar nut at top and bottom of bearing plate sized to match hollow rod section.
G. Drill Bit: Furnish drill bit type as suited for site conditions.

2.2 GROUT

A. Flushing Grout: Water /cement ratio 0.70.
B. Final Grout: Water / cement ratio 0.45.
C. Compressive Strength at 28 days: 3,000.00 psi.
D. Cement: Type I, II or III.
E. Water: Potable.

2.3 GROUT MIXING

A. Site-Mixed Grout: Measure, batch, mix, and deliver concrete according to ASTM C 94/C 94M.

PART 3 - EXECUTION

3.1 PREPARATION

A. Protect structures, utilities, sidewalks, pavements, and other facilities from damage caused by settlement, lateral movement, vibration, and other hazards created by micro-pier operations.

3.2 PILE CAP EXCAVATIONS

A. Perform final excavate from top of pile cap to bottom of pile cap elevation in preparation for micro-pile installation. Delay excavation until the day when each group of piles are to be installed.
B. Unclassified Excavation: Excavate to bearing elevations regardless of character of surface and subsurface conditions encountered. Unclassified excavated materials may include rock, soil materials, and obstructions.

1. Obstructions: Unclassified excavated materials may include removal of unanticipated boulders, concrete, masonry, or other subsurface obstructions. Payment for removing obstructions that cannot be removed by conventional augers fitted with soil or rock teeth, drilling buckets, or under reaming tools attached to drilling equipment of size, power, torque, and down thrust necessary for the Work will be according to Contract provisions for changes in the Work.

C. Classified Excavation: Excavation is classified as standard excavation, special excavation, and obstruction removal and includes excavation to bearing elevations as follows:

1. Standard excavation includes excavation accomplished with conventional augers fitted with soil or rock teeth, drilling buckets, or under reaming tools attached to drilling equipment of size, power, torque, and down thrust necessary for the Work.
2. Special excavation includes excavation that requires special equipment or procedures above or below indicated depth of drilled piers where drilled-pier excavation equipment used in standard excavation, operating at maximum power, torque, and down thrust, cannot advance the shaft.

    a. Special excavation requires use of special rock augers, core barrels, air tools, blasting, or other methods of hand excavation.
    b. Earth seams, rock fragments, and voids included in rock excavation area will be considered rock for full volume of shaft from initial contact with rock.

3. Obstructions: Payment for removing unanticipated boulders, concrete, masonry, or other subsurface obstructions that cannot be removed by conventional augers fitted with soil or rock teeth, drilling buckets, or under reaming tools attached to drilling equipment of size, power, torque, and down thrust necessary for the Work will be according to Contract provisions for changes in the Work.

D. Tolerances: Construct micro-pile within 2 inches of design center line in any direction.

1. If location tolerances are exceeded, provide corrective construction. Submit design and construction proposals to Engineer for review before proceeding.

3.3 MICRO-PILE INSTALLATION

A. Comply with the manufactures recommendations for fabricating, placing, and installation procedures for the system.
B. Install drill bid on hollow rod and advance rod by drilling while injecting flushing grout through the hollow rod and drill bit.
C. Add hollow rod lengths with coupling nuts and drill to required depth.
D. After reaching the final depth continue to inject to remove cuttings out of hole.
E. At the continuous injection stage replace the flushing grout with the richer finishing grout.
F. Install bearing plate on each pile
G. Record final boring depth elevation and grout volume.
H. Report final boring depth elevation to Surveyor.

3.4 FIELD QUALITY CONTROL

A. Special Inspections: Engage a qualified Surveyor to perform the following special inspections:

1. Record final pile locations.
2. Record top and bottom pile elevations
3. Prepare record location plan drawing.

B. Grout Tests and Inspections: ASTM C 172 except modified for slump to comply with ASTM C 94/C 94M.

1. Slump: ASTM C 143/C 143M; one test at point of placement for each compressive-strength test but no fewer than one test for each concrete load.

2. Grout Temperature: ASTM C 1064/C 1064M; 1 test hourly when air temperature is 40 deg F and below and 80 deg F and above, and 1 test for each set of compressive-strength specimens.
3. Compression Test Specimens: ASTM C 31/C 31M; one set of four standard cylinders for each compressive-strength test unless otherwise indicated. Mold and store cylinders for laboratory-cured test specimens unless field-cured test specimens are required.
4. Compressive-Strength Tests: ASTM C 39; one set for each drilled pier but not more than one set for each truck load. One specimen will be tested at 7 days, 2 specimens will be tested at 28 days, and 1 specimen will be retained in reserve for later testing if required.
5. If frequency of testing will provide fewer than five strength tests for a given class of grout, testing will be conducted from at least five randomly selected batches or from each batch if fewer than five are used.
6. If strength of field-cured cylinders is less than 85 percent of companion laboratory-cured cylinders, Contractor shall evaluate operations and provide corrective procedures for protecting and curing in-place concrete.
7. Strength of each grout mixture will be satisfactory if every average of any three consecutive compressive-strength tests equals or exceeds specified compressive strength and no compressive-strength test value falls below specified compressive strength by more than 500 psi.
8. Report test results in writing to Engineer, and Contractor within 48 hours of testing. List Project identification name and number, date of concrete placement, name of concrete testing and inspecting agency, location of concrete batch in Work, design compressive strength at 28 days, concrete mixture proportions and materials, compressive breaking strength, and type of break for both 7- and 28-day tests in reports of compressive-strength tests.

3.5 DISPOSAL OF SURPLUS AND WASTE MATERIALS

A. Disposal: Remove surplus satisfactory soil and waste material, including unsatisfactory soil, trash, and debris, and legally dispose of it off Owner's property.

END OF SECTION 31 63 25

SECTION 32 31 13 - CHAIN LINK FENCES AND GATES

PART 1 - GENERAL

1.1 RELATED DOCUMENTS

A. Drawings and general provisions of the Contract, including General and Supplementary Conditions and Division 01 Specification Sections, apply to this Section.

B. Comply with Wisconsin Commercial Building Codes/International Building Code (IBC)

C. Comply with Americans with Disabilities Architectural Guidelines and ICC/ANSI A117.1-2003.

1.2 SUMMARY

A. Section Includes:

1. Chain-link fences and gates.

B. Related Sections:

1. Division 03 Section “Cast-in-Place Concrete" for cast-in-place concrete post footings.
2. Division 31 Section “Earthwork Moving.”

1.3 PERFORMANCE REQUIREMENTS

A. Structural Performance: Chain-link fence and gate framework shall withstand the effects of gravity loads and the following loads and stresses within limits and under conditions indicated according to ASCE/SEI 7-05:

1. Minimum Post Size and Maximum Spacing: Determine according to CLFMI WLG 2445, based on mesh size and pattern specified and on the following:

a. Wind Loads: 85 mph
b. Exposure Category: B.
c. Fence Height: Match Existing.
d. Material Group: IA, ASTM F 1043, Schedule 40 steel pipe.

1.4 SUBMITTALS

A. Submit in accordance with Section 01 33 00 – Submittal Procedures

B. Product Data: For each type of product indicated, include construction details, material descriptions, dimensions of individual components and profiles, and finishes for chain-link fences and gates.

1. Fence and gate posts, rails, and fittings.
2. Chain-link fabric, reinforcements, and attachments.
3. Gates and hardware.

C. Shop Drawings: Include plans, elevations, sections, details, and attachments to other work. Show accessories, hardware, gate operation, and operational clearances.

D. Qualification Data: For qualified installer.

E. Product Certificates: For each type of chain-link fence and gate, signed by product manufacturer.

F. Product Test Reports: For framing strength according to ASTM F 1043.

G. Field quality-control reports.

H. Warranty: Sample of special warranty.

1.5 QUALITY ASSURANCE

A. Installer Qualifications: An experienced installer who has completed chain-link fences and gates similar in material, design, and extent to those indicated for this project and whose work has resulted in construction with a record of successful in-service performance.

B. Testing Agency Qualifications: For testing fence grounding. An independent agency, with the experience and capability to conduct the testing indicated, that is a member company of the InterNational Electrical Testing Association (NETA) or is a nationally recognized testing laboratory (NRTL) as defined by OSHA in 29 CFR 1910.7, and that is acceptable to authorities having jurisdiction.

1. Testing Agency's Field Supervisor: Currently certified by NETA to supervise on-site testing.

1.6 PROJECT CONDITIONS

A. Field Measurements: Verify layout information for chain-link fences and gates shown on Drawings in relation to property survey and existing structures. Verify dimensions by field measurements.

1.7 WARRANTY

A. Special Warranty: The Installer agrees to repair or replace components of chain-link fences and gates that fail in parts, materials, or workmanship within specified warranty period.

1. Failures include, but are not limited to, the following:

a. Deterioration of metals, metal finishes, and other materials beyond normal weathering.

2. Warranty Period: Five years from date of Substantial Completion.

PART 2 - PRODUCTS

2.1 CHAIN-LINK FENCE FABRIC

A. General: Provide fabric in one-piece heights measured between top and bottom of outer edge of selvage knuckle or twist. Comply with CLFMI Product Manual and with requirements indicated below:

1. Fabric Height: Match existing height as indicated on drawings.
2. Steel Wire Fabric: Wire with a diameter of 0.192 inch.

a. Mesh Size: 2 inches
b. Aluminum-Coated Fabric: ASTM A 491, Type I, 0.40 oz./sq. ft.
c. Coat selvage ends of fabric that is metallic coated before the weaving process with manufacturer's standard clear protective coating.

3. Selvage: Knuckled at both selvages.

2.2 FENCE FRAMING

A. Posts and Rails: Comply with ASTM F 1043 for framing, including rails, braces, and line; terminal; and corner posts. Provide members with minimum dimensions and wall thickness according to ASTM F 1043 or ASTM F 1083 based on the following:

1. Fence Height: As indicated on Drawings.

2. Heavy Industrial Strength: Material Group IA, round steel pipe, Schedule 40.

a. Line Post: 1.90 inch outside diameter, 2.72 lbs/ft.
b. Terminal and Corner Posts: 2.875 inch outside diameter, 5.79 lbs/ft.
c. Gate Post: 4.00 inch outside diameter, 9.10 lbs/ft.

3. Horizontal Framework Members: Top and bottom rails complying with ASTM F 1043.

a. Top Rail: 1.66 inch outside diameter, 2.27 lbs/ft.
b. Bottom Rail: 1.66 inch outside diameter, 2.27 lbs/ft.

4. Brace Rails: Comply with ASTM F 1043.
5. Metallic Coating for Steel Framing:

a. Type A, consisting of not less than minimum 2.0-oz./sq. ft. average zinc coating per ASTM A 123/A 123M or 4.0-oz./sq. ft. zinc coating per ASTM A 653/A 653M.

2.3 FITTINGS

A. General: Comply with ASTM F 626.

B. Post Caps: Provide for each post.

1. Provide line post caps with loop to receive top rail.

C. Rail and Brace Ends: For each gate, corner, pull, and end post.

D. Rail Fittings: Provide the following:

1. Top Rail Sleeves: Pressed-steel or round-steel tubing not less than 6 inches long.
2. Rail Clamps: Line and corner boulevard clamps for connecting bottom rails in the fence line-to-line posts.

E. Tension and Brace Bands: Pressed steel.

F. Tension Bars: Steel, length not less than 2 inches (50 mm) shorter than full height of chain-link fabric. Provide one bar for each gate and end post, and two for each corner and pull post, unless fabric is integrally woven into post.

G. Truss Rod Assemblies: Steel, hot-dip galvanized after threading rod and turnbuckle or other means of adjustment.

H. Tie Wires, Clips, and Fasteners: According to ASTM F 626.

1. Standard Round Wire Ties: For attaching chain-link fabric to posts, rails, and frames, complying with the following:
   a. Aluminum: ASTM B 211; Alloy 1350-H19; 0.192-inch diameter, mill-finished wire.

I. Finish:

1. Metallic Coating for Pressed Steel or Cast Iron: Not less than 1.2 oz. /sq. ft. zinc.

2. Aluminum: Mill finish.

2.4 GROUT AND ANCHORING CEMENT

A. Nonshrink, Nonmetallic Grout: Premixed, factory-packaged, nonstaining, noncorrosive, nongaseous grout complying with ASTM C 1107. Provide grout, recommended in writing by manufacturer, for exterior applications.

B. Erosion-Resistant Anchoring Cement: Factory-packaged, nonshrink, nonstaining, hydraulic-controlled expansion cement formulation for mixing with potable water at Project site to create pourable anchoring, patching, and grouting compound. Provide formulation that is resistant to erosion from water exposure without needing protection by a sealer or waterproof coating and that is recommended in writing by manufacturer, for exterior applications.

2.5 FENCE GROUNDING

A. Conductors: Bare, solid wire for No. 6 AWG and smaller; stranded wire for No. 4 AWG and larger.

1. Material above Finished Grade: Aluminum.
2. Material on or below Finished Grade: Copper.
3. Bonding Jumpers: Braided copper tape, 1 inch wide, woven of No. 30 AWG bare copper wire, terminated with copper ferrules.

B. Connectors and Grounding Rods: Comply with UL 467.

1. Connectors for Below-Grade Use: Exothermic welded type.
2. Grounding Rods: Copper-clad steel, 5/8 inch by 6 feet.

PART 3 - EXECUTION

3.1 EXAMINATION

A. Examine areas and conditions, with Installer present, for compliance with requirements for site clearing, earth moving, pavement work, and other conditions affecting performance of the Work.

1. Do not begin installation before final grading is completed unless otherwise permitted by Architect.

B. Proceed with installation only after unsatisfactory conditions have been corrected.

3.2 PREPARATION

A. Stake locations of fence lines, gates, and terminal posts. Do not exceed intervals of 500 feet or line of sight between stakes. Indicate locations of utilities, lawn sprinkler system, underground structures, benchmarks, and property monuments.

3.3 INSTALLATION, GENERAL

A. Install chain-link fencing to comply with ASTM F 567 and more stringent requirements indicated.

1. Install fencing on established boundary lines inside property line.

3.4 CHAIN-LINK FENCE INSTALLATION

A. Post Excavation: Drill or hand-excavate holes for posts to diameters and spacings indicated, in firm, undisturbed soil.

B. Post Setting: Set posts by mechanically driving into soil at indicated spacing into firm, undisturbed soil. Set every fourth line post, terminal post, corner post, and gate post in concrete.

1. Verify that posts are set plumb, aligned, and at correct height and spacing, and hold in position during setting with concrete or mechanical devices.
2. Concrete Fill: Place concrete around posts to dimensions indicated and vibrate or tamp for consolidation. Protect aboveground portion of posts from concrete splatter.

a. Concealed Concrete: Top 2 inches to allow covering with surface material.

3. Mechanically Driven Posts: Drive into soil to depth of 36 inches. Protect post top to prevent distortion.

C. Terminal Posts: Locate terminal end, corner, and gate posts per ASTM F 567 and terminal pull posts at changes in horizontal or vertical alignment of 15 degrees or more.

D. Line Posts: Space line posts uniformly at 8 feet o.c.

E. Post Bracing and Intermediate Rails: Install according to ASTM F 567, maintaining plumb position and alignment of fencing. Diagonally brace terminal posts to adjacent line posts with truss rods and turnbuckles. Install braces at end and gate posts and at both sides of corner and pull posts.

1. Locate horizontal braces at midheight of fabric 72 inches or higher, on fences with top rail and at two-third fabric height on fences without top rail. Install so posts are plumb when diagonal rod is under proper tension.

F. Top Rail: Install according to ASTM F 567, maintaining plumb position and alignment of fencing. Run rail continuously through line post caps, bending to radius for curved runs and terminating into rail end attached to posts or post caps fabricated to receive rail at terminal posts. Provide expansion couplings as recommended in writing by fencing manufacturer.

G. Bottom Rails: Install and secure to posts with fittings.

H. Chain-Link Fabric: Apply fabric to inside of enclosing framework. Leave 1 inch between finish grade or surface and bottom selvage unless otherwise indicated. Pull fabric taut and tie to posts, rails, and tension wires. Anchor to framework so fabric remains under tension after pulling force is released.

I. Tension or Stretcher Bars: Thread through fabric and secure to end, corner, pull, and gate posts with tension bands spaced not more than 15 inches o.c.

J. Tie Wires: Use wire of proper length to firmly secure fabric to line posts and rails. Attach wire at one end to chain-link fabric, wrap wire around post a minimum of 180 degrees, and attach other end to chain-link fabric per ASTM F 626. Bend ends of wire to minimize hazard to individuals and clothing.

1. Maximum Spacing: Tie fabric to line posts at 12 inches o.c. and to top and bottom rails, and braces at 24 inches o.c.

K. Fasteners: Install nuts for tension bands and carriage bolts on the side of the fence opposite the fabric side. Peen ends of bolts or score threads to prevent removal of nuts.

3.5 ADJUSTING

A. Gates: Adjust gates to operate smoothly, easily, and quietly, free of binding, warp, excessive deflection, distortion, nonalignment, misplacement, disruption, or malfunction, throughout entire operational range. Confirm that latches and locks engage accurately and securely without forcing or binding.

B. Lubricate hardware and other moving parts.

3.6 DEMONSTRATION

A. Engage a factory-authorized service representative to train Owner's personnel to adjust, operate, and maintain chain-link fences and gates.

END OF SECTION 32 31 13

SIGN PERMIT REVIEW

6/11/18 Plan Commission Meeting

Straight Line Collision / Solomon Properties

Village Planner Report **Germantown, Wisconsin**

Summary

Sheila & Daniel Cook, agent for Straight Line Collision, and Thomas Solomon, property owner, are requesting approval for a new wall sign and replacement monument sign for the facility located at W154 N11412 Fond du Lac Avenue (formerly Dick's Body Shop).

Property Location: W154 N11412 Fond du Lac Avenue

Property Owner/ Applicant: Sheila Sueflohn-Cook & Daniel Cook
W154 N11412 Fond du Lac Avenue
Germantown, WI

Current Zoning: B-3: General Business (w/ CUP for Auto Body Repair)

Adjacent Land Use		Adjacent Zoning
North	Institutional	I
South	Residential	Rm-2
East	Residential	Rm-2
West	Residential	Rm-3

Proposal

Sheila & Daniel Cook, agent for Straight Line Collision, and Thomas Solomon, property owner, are requesting approval for the following wall sign and replacement monument sign for the facility located at W154 N11412 Fond du Lac Avenue (formerly Dick's Body Shop):

- 5' x 12' (60 total sqft) wall-mounted sign comprised of individual, internally-illuminated channel letters and logo mounted on raceways mounted on the north elevation of the building;
- 3' x 4' (12 sqft per side; 24 sqft total) replacement monument sign comprised of an aluminum panel with vinyl lettering and graphics installed on the existing sign structure. The existing sign will be further improved with a new shingle roof component and re-painted; no structural replacements modifications are proposed.

Staff Analysis

The proposed wall sign meets the Village's sign requirements for the existing commercial building. However, the monument sign is currently non-conforming given that it does not meet the minimum setback from the right-of-way and is constructed of sign structural components that are no longer allowed for new monument signs. Nonetheless, under the non-conforming structure provisions in the Zoning Code, the existing sign can be re-used and the sign area replaced provided no structural replacements or modifications are made. If the new owner needs or desires to replace the sign or structural components, a new sign would be required to meet the current sign regulations for location and design.

Village Planner Recommendation

APPROVE the proposed wall and monument signs for Straight Line Collision located at W154 N11412 Fond du Lac Avenue subject to the following conditions:

1. An electrical permit shall be obtained from Inspection Services prior to installation of any/all electrical components.
2. No structural replacements or modifications are permitted to the existing sign. Any new or replacement sign must comply with current sign regulations and be reviewed and approved by the Plan Commission.

Village of Germantown
...Willkommen

Fee must accompany application

☒ $275 Sign Review

Paid [illegible] Date 5-2-18

SIGN REVIEW APPLICATION

Pursuant to Section 17.46 of the Municipal Code

Please read and complete this application carefully. **All applications must be signed and dated.**

1 APPLICANT OR AGENT

Sheila Swallow-Cook
Daniel Cook

Phone (262) 255-7171
Fax (262) 255 1891
E-Mail straightlinecollisionc@gmail.com

PROPERTY OWNER

Thomas H Solomon
440 N PRAIRIE Dr
Oconomowoc Wi 53066

Phone (262) 431 4020

2 PROPERTY ADDRESS OR GENERAL LOCATION

W154 N. 11412 Fond Du Lac Ave Germantown

3 SIGN INFORMATION

Sign Dimensions 5'0" height x 12'0" width
Number of Sides 1
Total Square Footage of Sign (include all sides) 60 sq
Total height of the Sign
Is the Sign to be illuminated ✓ yes ___ no
Type of Sign Construction Materials Neon & Illuminated letters
Distance to Closest Property Line 40 Feet

Are there any existing signs on the property Yes
If yes, what is the total Square Footage of existing signs ?

What are the intentions for the existing signs: Take down ✓ Remain ✓

4 SIGNATURES -- ALL APPLICATIONS MUST BE SIGNED BY OWNER!

Applicant [signature] Date 5-2-18

Owner [signature] Date 5/2/18

BAUER Sign & Lighting COMPANY
2500 South 170th Street
New Berlin, Wisconsin 53151
Proudly Made In the USA!
wire bauersignusa.com
voice 262.784.0500
fax 262.784.6675

Award Winning Graphic Design

DESIGNFIRMS 2009-10 Graphic Award

SAVED AS	Straight Line Aut
LOCATION	Germantown V
SALES REP	Dave Salkin
DATE	6 Mar 18
REVISION	20 Mar 18
	26 Mar 18

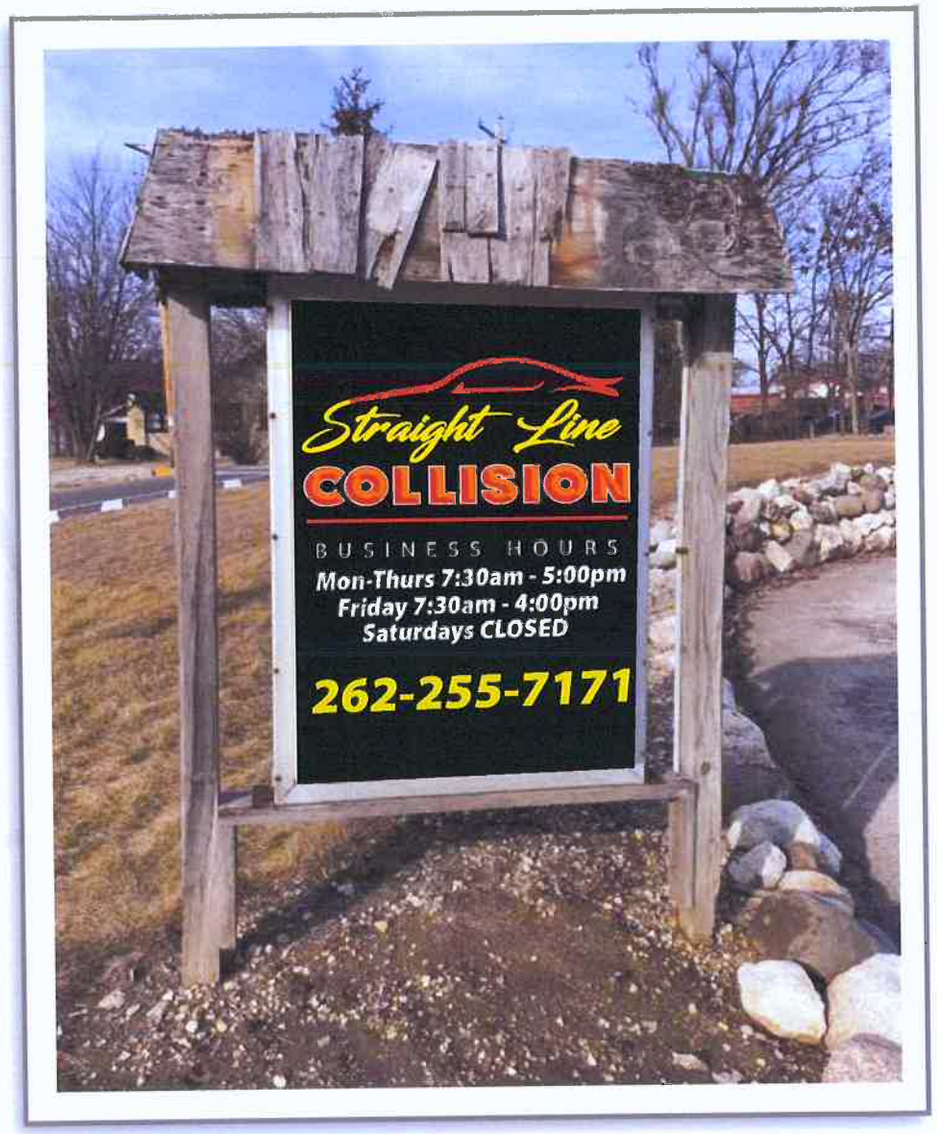

SPECIFICATIONS

FABRICATE AND INSTALL NON ILLUMINATED ALUMINUM SIGNAGE

- ***SUBSTRATE*** *TO BE .125 ALUMINUM PAINTED BLACK*
- ***GRAPHICS*** *TO BE COMPUTER CUT REFLECTIVE VINYL OVERLAYS*
- ***NON ILLUMINATED***
- ***INSTALLED*** *TO EXISTING SIGN WITH APPROPRIATE HARDWARE*

Straight Line Collision reface outdoor sign

Printed artwork colors are not always representative of final product colors. Please refer to specifications for call out or salesman for samples

FINAL ELECTRICAL CONNECTION IS CLIENT'S

our products are certified by: Underwriters Laboratories, Inc.

This sign shall be manufactured in accordance with Article 600 of the National Electrical Code and / or the applicable local codes. This includes proper grounding and

APPROVAL / DATE

BAUER Sign & Lighting COMPANY
2500 South 170th Street
New Berlin, Wisconsin 53151
Proudly Made In the USA!
wire bauersignusa.com
voice 262.784.0500
fax 262.784.6675

Award Winning Graphic Design

DESIGNFIRMS 2009-10 Graphic Award

SAVED AS	Straight Line Aut
LOCATION	Germantown V
SALES REP	Dave Salkin
DATE	6 Mar 18
REVISION	20 Mar 18
	26 Mar 18
	4 May 18

Paint Structure as Shown
(By Others)

SPECIFICATIONS

FABRICATE AND INSTALL NON ILLUMINATED ALUMINUM SIGNAGE

- ***SUBSTRATE*** *TO BE .125 ALUMINUM PAINTED BLACK*
- ***GRAPHICS*** *TO BE COMPUTER CUT REFLECTIVE VINYL OVERLAYS*
- ***NON ILLUMINATED***
- ***INSTALLED*** *TO EXISTING SIGN WITH APPROPRIATE HARDWARE*

Straight Line Collision reface outdoor sign

Printed artwork colors are not always representative of final product colors. Please refer to specifications for call out or salesman for samples

FINAL ELECTRICAL CONNECTION IS CLIENT'S

our products are certified by: Underwriters Laboratories, Inc.

This sign shall be manufactured in accordance with Article 600 of the National Electrical Code and/ or the applicable local codes. This includes proper grounding and

APPROVAL / DATE

BAUER Sign & Lighting COMPANY

2500 South 170th Street
New Berlin, Wisconsin 53151

Proudly Made In the USA!

wire bauersignusa.com
voice 262.784.0500
fax 262.784.6675

Award Winning Graphic Design

DESIGNFIRMS 2009-10 Graphic Award

SAVED AS	Straight Line Au
LOCATION	Germantown V
SALES REP	Dave Salkin
DATE	6 Mar 18
REVISION	21 Mar 18
	23 Mar 18

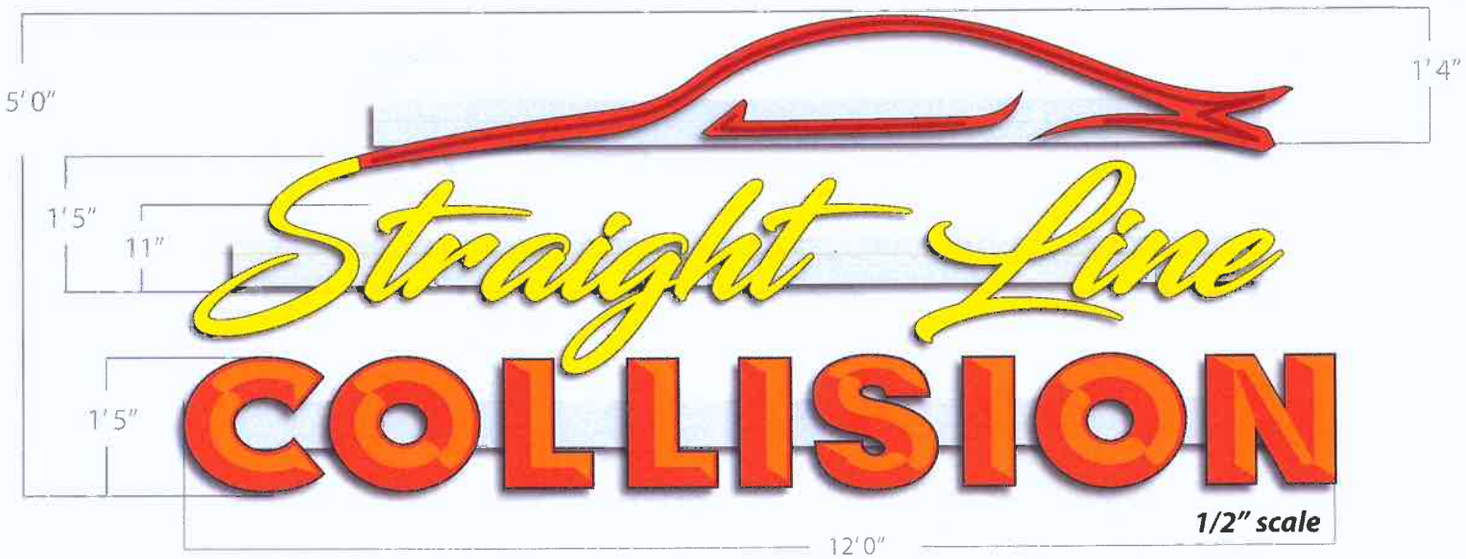

SPECIFICATIONS

FABRICATE AND INSTALL (1SET) INTERNALLY ILLUMINATED, RACEWAY MOUNTED CHANNEL LETTERS

- ***NEON CAR*** *TO BE 13mm SINGLE STROKE CLEAR RED NEON MOUNTED INSIDE OF INDIVIDUAL ALUMINUM CHANNELS PAINTED TO MATCH FACADE, INSIDES PAINTED RED*
- ***CHANNEL LETTER FACES*** *TO BE #7328 WHITE ACRYLIC DECORATED WITH TRANSLUCENT VINYL OVERLAYS*
- ***RETURNS*** *TO BE .050X5" AND BACKS TO BE .063 ALUMINUM*
- ***TRIMCAPS*** *TO BE 1" BLACK*
- ***EXTERIORS*** *PAINTED BLACK*
- ***INTERIORS*** *PAINTED WHITE*
- ***ILLUMINATED*** *WITH WHITE LEDs*
- ***POWERED*** *WITH APPROPRIATE LOAD POWER SUPPLIES*
- ***RACEWAYS*** *TO BE 5"x 3.5" x VARIOUS LENGTHS AND PAINTED TO MATCH FACADE (TBD)*

Straight Line Collision channel letters

Printed artwork colors are not always representative of final product colors. Please refer to specifications for call out or salesman for samples

FINAL ELECTRICAL CONNECTION IS CLIENT'S

our products are certified by: Underwriters Laboratories, Inc.

This sign shall be manufactured in accordance with Article 600 of the National Electrical Code and / or the applicaple local codes. This includes proper grounding and

APPROVAL / DATE