#

VILLAGE OF GERMANTOWN
N112 W17001 MEQUON ROAD
GERMANTOWN, WI 53022

MEETING:	**PLAN COMMISSION**
DATE AND TIME:	**MONDAY, MARCH 11, 2019 6:30 p.m.**
LOCATION:	**Germantown Village Hall Board Room**

I. **CALL TO ORDER** This meeting has been given public notice in accordance with Wisconsin Statutes, Section 19.83 and 19.84 in such form that will apprise the general public and news media of subject matter that is intended for discussion and action.

II. **ROLL CALL**

III. **PUBLIC INPUT/PUBLIC APPEARANCE:** Please be advised per §19.84(2) that information will be received from the public, however, no action will be taken at this time.

IV. **APPROVAL OF MINUTES** February 11, 2019

V. **PUBLIC HEARINGS**

A. Diversified Engineering Inc., Agent for Waste Management of Wisconsin, Property Owner, N96 W13840, W13600 & W13640 County Line Road. Conditional Use Permit to operate a Truck Maintenance Facility.

B. Consideration and action on a recommendation to the Village Board regarding a Conditional Use Permit application by Diversified Engineering, Agent for Waste Management of Wisconsin, Property Owner, N96 W13840, W13600 & W13640 County Line Road to operate a Truck Maintenance Facility, and, consideration and action on a Site Plan application for a 35,035 sqft Truck Maintenance Facility.

C. Carity Land Corporation and Neumann Developments, Inc., Agents for Briscoe Development & Management Inc., Property Owner of 147 Acres located South of Freistadt Road, East of the Canadian National Railroad, North of Mequon Road and West of Country Aire Drive. Proposed Amendments to the Wrenwood Planned Development District (PDD) General Development Plan (GDP) and Conditions and Restrictions adopted under Resolution No. 28-2018.

D. Consideration and Action on a recommendation to the Village Board regarding an application by Carity Land Corporation and Neumann Developments, Agents for Briscoe Development & Management Inc., Property Owner of 147 Acres located South of Freistadt Road, East of the Canadian National Railroad, North of Mequon Road and West of Country Aire Drive. Proposed Amendments to the Wrenwood Planned Development District (PDD) General Development Plan (GDP) and Conditions and Restrictions adopted under Resolution No. 28-2018.

VI. **NEW BUSINESS**

A. David Leszczynski, Applicant and Property Owner of Germantown Acquisition LLC, W124 N11749 Wasaukee Road. Preliminary Subdivision Plat for Woodland Ponds Estates, a 12 Lot Residential Subdivision.

VII. **ANNOUNCEMENTS**

VIII. **ADJOURNMENT** The next Plan Commission Meeting will be on March 25, 2019 at 6:30 p.m.

UPON REASONABLE NOTICE, efforts will be made to accommodate the needs of disabled individuals through appropriate aids and services. For additional information or to request this service please contact the Village Clerk at (262)250-4740 at least 2 days prior to the meeting. Notice is given that a majority of the Village Board may attend this meeting to gather information about an item over which they have decision making responsibility. This may constitute a meeting of the Village Board per State ex rel. Badke v. Greendale Village Board, even though the Village Board will not take formal action at this meeting.

#

PLAN COMMISSION MINUTES
February 11, 2019

CALL TO ORDER: Chairman Wolter called the meeting to order at 6:30 p.m.

ROLL CALL: Chairman Dean Wolter, Trustee Rep David Baum, Commissioners Tony Laszewski, Peter Nilles, Bill Shadid were present. Commissioner Bob Williams arrived at 6:35 p.m. Commissioner Matt Kimmler was absent and excused. Also present were Community Development Director/Village Planner Jeff Retzlaff and Planning Assistant Lori Johnson.

PUBLIC INPUT: None

APPROVAL OF MINUTES: ***MOTION Baum second Shadid to Approve the minutes from 1-14-19. MOTION carried unanimously.***

PUBLIC HEARINGS*:*
Kyle Fraser, agent for the Cusatis Trust, Property Owner W213 N11111 Appleton Avenue.
Conditional Use Permit for a major home occupation for the operation of a landscape maintenance operation. Planner Retzlaff summarized the proposal. The public hearing held at the January 11th Plan Commission meeting was kept open until additional information was received from the applicant. Chairman Wolter re-opened the Public Hearing. Dennis Meyers, N115 W20309 Woodland Drive, thanked Fraser for locating his business in Germantown. He said Appleton Avenue is a County highway and would be responsible for installing a sign warning of the entrance to this business. He indicated backup beeper alarms could also be a potential problem. Chairman Wolter closed the Public Hearing.

Consideration and Action: Planner Retzlaff explained the conditions of approval address Trustee Myers concerns and stated the site was formerly used by a construction company without any issues or complaints. Kyle Fraser addressed the Commission and explained his business does maintenance and design, not landscape construction. He indicated there would not be much noise generated at the site and added he had only one vehicle with a backup alarm.

MOTION Baum second Shadid to Approve a conditional use permit (CUP) for Kyle Fraser, agent for the Cusatis Trust, property owner for the operation of a "major" home-occupation lawn & landscape maintenance business from the 6.5-acre residential property located at W213 N11111 Appleton Avenue subject to the following conditions:

1. ***The landscape services operation shall operate consistent as described in the application and as described by the operator operational while continuously meeting and comply with all applicable provisions, limitations and regulations in Section 17.61 (Home Occupations and Professional Home Offices) of the Zoning Code; specifically, Section 17.61(5)(b) and 17.61(4)(a) through (q) except (n)1. which shall be as set forth below.***
2. ***Pursuant to Section 17.61(4)(n)1. of the Zoning Code, the maximum time period for which this major home occupation CUP will remain valid shall be ten (10) years from the date of issuance subject to ongoing compliance with all conditions set forth herein.***
3. ***If the use, activities and/or operation subject of this permit falls out of conformity with the conditions herein, or where there is a change in the nature, character, intensity or extent of the business operation and activities permitted under this conditional use permit that causes special problems or harmful effects associated with the business***

operation, or, where conditions imposed herein that were anticipated to ameliorate or eliminate harmful effects associated with the use but are no longer capable or insufficient to do so, or, for similar cause based upon consideration for the public comfort, safety, and welfare, the conditional use permit may be terminated or modified by the Village Board by the amendment to or addition of conditions after public hearing thereon.

4. ***The wholesale or retail sale of plants, stone, mulch or any other hardscape or landscape-related products shall be prohibited from the property.***
5. ***The use and operation of business-related equipment on the property (e.g. back-up warning devices, warm-up and/or maintenance idling) shall be conducted in a manner that does not disrupt the surrounding residential properties. Operations shall be conducted in compliance with all Village Code provisions regarding noise (Section 9.07 Village Code) and other potential nuisances.***
6. ***In the event that the Village and/or Washington County Highway Department determines that the driveway intersection serving the subject property is or has become a danger to or problem for the travelling public as a result of business-related equipment operating on or traveling to/from the property, the owner shall cooperate with said agencies to mitigate said danger or problems (i.e. debris sweeping, warning signage, sight-vision improvements, etc).***

MOTION carried unanimously.

Diversified Engineering Inc., Agent for Waste Management of Wisconsin, Property Owner, N96 W13840, W13600 & W13640 County Line Road. Conditional Use Permit to operate a Truck Maintenance Facility. Planner Retzlaff summarized the proposal. Lynn Morgan, Manager of Public Affairs and Matt McGuren, District Manager for Waste Management spoke on the proposal. Planner Retzlaff indicated the applications are not complete at this time but Waste Management has been responsive to providing the additional information needed. Chairman Wolter opened the public hearing. No one spoke. He asked the Commission if the public hearing should remain open until the March 11th Plan Commission meeting.

MOTION Baum second Laszewski to keep the Public Hearing for Waste Management open until the 3-11-19 Plan Commission meeting and the public hearing notice should be re-noticed.

Discussion followed. Trustee Baum questioned the safety of storing natural gas on the site, noise from the trucks and smells. Lynn Morgan explained compressed natural gas is the same gas used in your home and that Waste Management has been operating natural gas vehicles safely for over 20 years without any incidents. Planner Retzlaff said above ground storage for gas is allowed with a permit and is included in the Conditional Use Permit application. Ms. Morgan said if noise becomes an issue and needs to be addressed, they're proposing a type of backup alarm called a broad-spectrum alarm that greatly reduces the decibel frequency and cone of receptor range. The alarm would be installed on their vehicles if noise becomes an issue. She said there shouldn't be any odor from the natural gas or garbage because this facility will not be used for storing garbage. She added the locations are engineered to manage the gas entirely within the internal system. Ms. Morgan said the pull through stall for the trucks will probably not be able to be used, but the white noise back-up alarms would be a very effective resolution. She said confirmed Waste Management would commit to installing the devices after the Village receives a single noise complaint.

DRAFT

Discussion continued. Chairman Wolter asked about the current truck traffic pattern. Nick Berner, Diversified Engineering, explained 60 to 65 percent of the trucks head south on Boundary Road the rest will head north. At the new facility, 50 percent of the trucks will head toward the Autumn Ridge subdivision and the 50 percent will head east toward Boundary Road. He said when the trucks return, they will receive preventive maintenance if needed but not on a daily basis. He added that this facility will have a truck wash station.

Planner Retzlaff asked if there would be any noise from 10 pm to midnight. Mr. Berner said 90 percent of work being done would be done inside the building. He said the outside lighting is only for the truck maintenance work and then it would be turned down. Chairman Wolter asked of the lighting will be seen from nearby residents. Brian Stull, Diversified Engineering, said the lights will be a full cut off fixture and can be put on a dimmer schedule, or turned off during off hours. Chairman Wolter said residents will probably have an issue with the lighting. Mr. Berner said the building is designed to be operated with the doors shut. Trustee Baum was concerned the doors could be open on a nice night. Planner Retzlaff offered to include a condition of approval that the doors should remain closed when vehicles aren't being brought in and out. Chairman Wolter said he appreciates the additional tax base and jobs this proposal will bring to Germantown.

MOTION carried unanimously.

Verizon Cellular – N112 W16076 Mequon Road. Sign Effectz, agent for DDS Germantown Investment, property owner, is requesting approval for additional wall and monument signs for the new retail store in the Germantown Commons building. Planner Retzlaff summarized the proposal. He stated staff's recommendation is to deny the proposed monument sign addition because it increases the sign height and area beyond the maximums allowed for this multi-tenant building. He further explained if a variance is obtained from the requirements, the sign would be further required to meet the current monument sign requirements including the need to move the sign to meet the setback requirement, add a masonry base, add address coordinates and install landscaping around the base. Discussion followed.

Adam Jacobson, agent for Verizon, said they would be OK moving the sign down but that would take signage away from a future fourth tenant. He indicated they are not interested in an appeal process and would be OK with approval of the additional signage on the west wall.

MOTION Baum second Laszewski to Approve the proposed wall sign for the west elevation as proposed for the Verizon retail store located in the Germantown Commons center located at N112 W16076 Mequon Road subject to the following conditions:

1. ***Electrical permits shall be obtained from the Inspection Services prior to installation.***

And, Deny the proposed monument sign modifications as proposed.

MOTION carried unanimously.

Germantown High School – W180 N11501 River Lane. The School District is seeking approval of revisions to the approved building plans for the high school facility. Planner Retzlaff summarized the proposal requesting that screening the rooftop units not be required. Scott Kramer, Plunkett Raysich

DRAFT

Architects, said a lot of the units are not visible and are 1000 feet from River Lane. He added that the units have been painted to match the walls to blend in. He agreed that the unit on the administrative building should be screened. Discussion followed.

MOTION Baum second Nilles to Approve the School District request to eliminate the rooftop mechanical screen requirement (as shown on Sheets A230 & A420 dated 6/15/18) except for Units RAHU-1, RAHU-2 and RAHU-3 subject to the following conditions:

1. ***The accent lighting at the performing arts center entrance shall either be turned off permanently, or, allowed to be turn on at a reduced intensity (level to be determined in cooperation with Village staff) and only before, after and during scheduled night-time events (up to 30 minutes before and after). If the District chooses to keep the lighting operational, the District shall submit to the Village the detailed specifications and operational characteristics for said accessory lighting for review and approval no later than April 1, 2019***.

Planner Retzlaff stated there was another issue that is part of the staff review and recommendation. At the time of the original site plan approval, there was concern with the floodlight fixtures proposed for the north parking lot. Plan Commission discussed that if the lights were angled, they may create a problem to the surrounding residents; and ultimately that has happened. The complaints describe the lights are too bright, create glare, are on too long and also that the lighting at the Performing Arts Center is very bright. Planner Retzlaff said the school district has re-angled the light fixtures in the parking lot to re-direct light downward and onto the school property. Staff will continue to work with the District to address the issue. The lights on the PAC may need to be toned down or turned off when there isn't a performance, also reduce the brightness, dim them or turn them off altogether. We will need specifications for the lighting to review and approve it accordingly. Trustee Baum said LED lights are very bright and back shields should be put on the north and east sides of the parking lot.

MOTION carried unanimously.

Dheinsville Park – N128 W18780 Holy Hill Road. The Germantown Historical Society is requesting re-approval of site development and building plans for an 11,200 sqft open air pavilion to be constructed within the Village's Dheinsville Park property. Planner Retzlaff summarized the proposal. He explained the original site plan approval expired in September 2018. The Germantown Historical Society is requesting re-approval of the site plan and is proposing to change the west elevation of the pavilion to have a permanent wall versus the previously proposed tent-style removable enclosure.

MOTION Baum second Shadid to Approve the site development and building plans for the proposed 11,200 sqft pavilion to be constructed within the Village's Dheinsville Park property on Holy Hill Road subject to the following conditions:

1. ***Approval is for the site and building plan set dated March 13, 2017 with a requirement that the west elevation be comprised of a solid wall (vs. removable tent or flaps) unless otherwise revised by a subsequent plan set approved by the Village Planner pursuant to revisions required herein.***
2. ***State approved plans are required by Inspection services as part of the building permit application. The GHS shall coordinate installation of ADA accessibility improvements with the Village Building Inspector and/or appropriate state agency.***
3. ***A fire lane approved by the Germantown Fire Department is required around the***

perimeter of the building connecting to the parking area or roadway for emergency vehicle access. The GHS shall coordinate the location, design, materials and installation of the fire lane with the Fire Department.

4. ***The GHS pavilion project shall be subject to oversight by the Village's Building Construction Oversight Committee as provided by Village Code.***

Discussion followed. Trustee Baum said he did not want to see cinder block used for the west wall. Jeff Dhein said he didn't know what material would be used because he hadn't received the plans from the builder yet. He commented that the Building Oversight Committee would be reviewing the plans.

MOTION carried unanimously.

ANNOUNCEMENTS: None

ADJOURNMENT: There being no further business, the meeting was adjourned at 8:17 p.m.

Respectfully submitted,

Lori Johnson
Planning Assistant

DRAFT

CONDITIONAL USE PERMIT (CUP) APPLICATION & SITE PLAN REVIEW

3/11/19 Plan Commission Meeting

Waste Management of Wisconsin Inc.

Village Planner Report **Germantown, Wisconsin**

Summary

Nick Berner, Diversified Engineering Inc., agent for Waste Management of WI, property owner, is requesting approval of a Conditional Use Permit (CUP) to operate and site development and building plans for a 35,035 sqft truck maintenance facility from the property located at N96 W13840 County Line Road.

Location: N96 W13840 County Line Road

Applicant/ Property Owner:

Nick Berner, PE Diversified Engineering New Philadelphia, OH	Don Smith, PE Waste Management of WI Chicago, IL

Zoning: M-2: General Industrial

Adjacent Land Uses		Zoning
North	Agricultural/Industrial	A-1/M-2
South	Industrial (Menomonee Falls)	n/a
East	Industrial (retired landfill)	M-2
West	Residential/Business	Rd-2/Rs-1/B-3

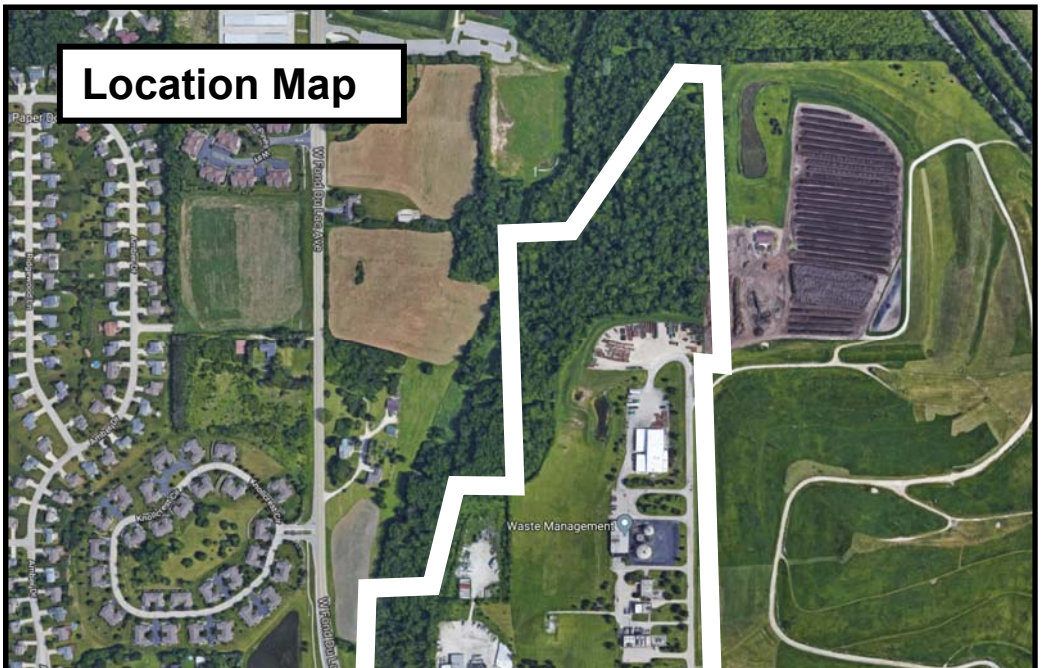

Proposal

Nick Berner, Diversified Engineering Inc., agent for Waste Management of WI (WM), property owner, is requesting approval of a Conditional Use Permit (CUP) to operate and site development and building plans for a 35,035 sqft truck maintenance facility from the property located at N96 W13840 County Line Road.

As detailed in the January 9 project narrative and site development plans, the existing buildings and site improvements on the 8.15-acre parcel formerly occupied by WM's Port-O-Let storage operation will be re-developed to accommodate the proposed truck maintenance facility. The facility will extend onto portions of the adjacent 35.6-acre parcel to the east. As noted in the application, WM intends to combine a total of four adjoining parcels owned by WM located north of County Line Road, east of STH 145/Fond du Lac Avenue, and west of the private internal driveway commonly referred to as "Midlands Drive" that serves other WM operations (i.e. Orchard Ridge Gas-to-Electric Power Plant, the former WM Healthcare Solutions medical waste recycling operation building, and the WM compost operation). This land combination will be accomplished with a certified survey map (CSM) submitted to the Village pending approval of the conditional use permit and site development & building plan applications.

The proposed truck maintenance facility includes a 35,035 sqft pre-engineered metal building that will serve as a new location for the existing operations and staffing at the Menomonee Falls facility located at W124 N8925 Boundary Road.

The west 9,750 sqft of the building will have office space for thirty (30) staff and a "launch" area serving 90-100 waste hauling truck drivers (office/assembly space for pre-route communications and management). The east 25,285 sqft will have space for a 14-bay truck compressed natural gas (CNG) maintenance facility. The WM vehicle fleet of waste removal/recycling vehicles is transitioning from one that operates with diesel fuel to a fleet of vehicles powered entirely by compressed natural gas (CNG) that results in low or no particulate emissions, greenhouse gases and less noise than comparable diesel-powered trucks. The transition is expected to take a period of five years. A series of trusses supporting an overhead CNG refueling system will be installed in the north parking lot providing each parking stall a retractable refueling hose (Sheet A1.2). Overhead lighting, cameras and fire detection devices will be installed to and above the truss system. Underground pipes will provide CNG from the on-site CNG compound to the truss refueling system.

The operation is expected to serve up to thirty (30) full and part-time office staff and up to 100 truck drivers. Hours of operation are proposed to be 3:30a.m. to 12 midnight, Monday through Friday, and, 5:00am to 12 noon on Saturday.

In addition to the office and maintenance facility components of the building, site improvements include:

- 166 employee/visitor vehicle parking stalls (44 additional future stalls)
- 100 waste removal/recycling vehicle parking stalls
- Compressed natural gas (CNG) compound & fueling station
- (2) access driveways serving the facility

Parking, Access and Traffic Circulation

Primary access to the new truck maintenance facility will be provided by the existing westernmost driveway on County Line Road. Secondary access will be provided to/from a new driveway connection linking the parking area north of the facility to the existing internal roadway commonly referred to as “Midlands Drive”; a north-south roadway intersecting County Line Road approximately 1,000 feet east of the primary access driveway.

On-site parking includes 166 parking stalls for employees/visitors located south and west of the maintenance facility. An additional 44 stalls can be constructed in a secondary parking area west of the main driveway and parking area south of the building for a total of 210 parking stalls (vs. 207 stalls recommended under the Village’s guidelines) to serve both the truck maintenance facility. An additional 100 parking stalls for waste removal/recycling trucks are provided north of the building that will be enclosed by a secure 6’ high chain link fence with controlled access gates.

Utilities

Public water and sanitary sewer lateral lines will be extended to the site from existing mains in County Line Road. Water is provided by the Village of Menomonee Falls. Sanitary sewer is provided by Germantown. All other essential utility services including gas, electric, etc. will utilize existing connections.

Storm Water Management

Impervious area across the entire 46.03 acre site will be approximately 11.8 acres (25.7%) leaving 74.3% open space (maximum impervious allowed is 50% in the M-2: General Industrial District).

As shown on the Storm Water Management Plan (Sheet C1.8), the facility will be served by two (2) storm water retention basins. One basin is located west of the building and primary driveway into the site and the second basin located in the northeast portion of the site. On-site storm sewers, catch basins, roof drains, ditching and swales will be used to divert run-off into the two basins.

Landscaping

A detailed landscaping plan (Sheet L1.0) shows landscape items comprised of evergreen , deciduous and ornamental trees, shrubs, perennials, and grasses installed at the primary driveway entrance, in landscaped medians in the parking lots around the south and east perimeter of the south parking lot and along the south side of the maintenance building. A low-level berm will be installed east of the parking area with

additional evergreen trees to supplement and enhance the existing landscaping along County Line Road.

Existing chain link fencing around the existing Port-O-Let operation will be removed and replaced with new 6' chain link fencing around the maintenance building and parking area for the waste removal/recycling trucks. Controlled gates will be installed at two points of entry/exit to the north parking area and maintenance building (Sheet X1.1).

Lighting. Exterior lighting of the site and SMT building will include:

- (24) 102W 12,500 Lumen LED fixtures w/ 5000K "white" color mounted on 20' poles and 2'5" concrete bases (22'6" max fixture mounted height) along the primary and secondary driveways and within the parking areas;
- (10) 207W 25,500 Lumen LED fixtures w/ 4000K "white" color wall mounted on the building at a height of 25';
- (5) 249W 32,700 Lumen LED fixtures w/ 5000K "white" color mounted on 20' poles and 2'5" concrete bases (22'6" max fixture mounted height) at the east end of the truss refueling systems and at the CNG compound and quick refueling station in the north parking area;
- (68) 74W 10,500 Lumen LED fixtures surface mounted to the truss system at a height of 19';
- (11) 29W 3,200 Lumen LED wall sconce fixtures mounted on the north, west and south elevations of the office building at a height of 12 feet.

Signage
One (1) 6' high x 12' wide (72 sqft) wall sign is proposed on the side (west) façade of the office building facing the parking lot. The sign is comprised of aluminum plates surface mounted to the metal wall panel. No lighting is proposed. No other signage is proposed at this time. A separate sign permit will be submitted for a future monument sign along County Line Road.

Staff Comments
Consistency with Village's Land Use Plan & M-2 Zoning District.
The 2020 Land Use Plan map classifies this property as "Industrial/Office". The current zoning of the property (and adjacent WM parcels to the east) is M-2: General Industrial. The proposed truck maintenance facility can be allowed within the M-2 District with a conditional use permit (CUP) under Section 17.35(c) of the M-2 District regulations.

At the initial public hearing, Plan Commission members and staff expressed concern with potential site lighting, noise and odor associated with the new maintenance facility. As discussed, representatives for WM explained that no trash or recyclables will be kept on the maintenance facility site. WM also indicated that in the event that noise becomes a problem for the surrounding residential area (specifically the "beep-beep-beep" noise from truck-mounted backup alarms), they will replace the backup alarms with "white noise" warning devices. These commitments should be made part of any conditional use permit.

Site lighting is addressed as part of the site plan submittal. The lighting fixtures and associated levels are generally consistent with the Village's fixture requirements and recommended lighting levels for industrial uses/activities. WM staff indicated that the LED fixtures proposed for the site will have the ability to be dimmed at non-activity times during the day. A more detailed plan for when and how lighting will be dimmed on the site should be prepared and submitted to the Village as part of the operational plan for the operation and review and approval as a condition of approval.

It has been pointed out that the Village of Menomonee Falls is the current provider of public water to the WM property and other existing buildings in their "complex" in Germantown. The Germantown Fire Department has been working cooperatively with WM and Menomonee Falls staff to ensure adequate water supply and pressure is provided to the proposed maintenance facility. As a result, WM will be replacing and installing new fire hydrants in and around the proposed facility. All parties agreed that a pressure testing will be done to ensure adequate fire flows are available.

Further, Menomonee Falls has maintenance jurisdiction over the segment of County Line Road east of STH145/Fond du Lac Avenue. The Village Engineer for Menomonee Falls has requested traffic counts projected for the maintenance facility operation at the time a driveway permit is request by WM. That traffic information will be used to determine what, if any, intersection and/or driveway improvements, e.g. turn-lanes, by-pass or acceleration lanes, may be required on County Line Road at either of the two driveway intersections.

The landscape plan is adequate except for the street tree requirement along County Line Road. While most of the trees proposed on the site are evergreen trees, additional deciduous trees are required to satisfy the street tree requirement. The landscape plan needs to be revised to address this deficiency. At a minimum, additional street trees in an amount equal to one (1) tree per 50 feet of road frontage shall be added to the plan and installed in addition to the site landscaping already shown in the landscape plan. Further, the landscape plan specifies 3" caliper White Spruce and Black Hills Spruce trees. Unlike deciduous trees, evergreen trees are typically discussed in terms of total height (vs. trunk caliper) under the Village's landscaping and street tree guidelines. A typical planted size of evergreen trees in Germantown is a minimum of 6-8 feet. If the 3" caliper evergreen trees that WM intends to install as shown on the landscape plan are, in fact, a minimum of 6'-8', nothing more needs to be done. However, if a 3" caliper evergreen tree is less than 6' in height, the landscape plan needs to be revised to reflect a minimum planted height of 6'-8' for evergreen trees.

An accessory use proposed for the facility is a 10,000 gal above-ground storage tank (AST) for diesel fuel used by the WM fleet as it transitions to a CNG-powered fleet over the next 5 years. In the M-2: General Industrial District, more than one AST over 5,000 gal capacity requires a conditional use permit and compliance with the Village's AST regulations under Chapter 11.071 of the Municipal Code. The proposed 10,000 gal AST needs to be added to the list of uses in any approved CUP for the proposed facility.

As discussed previously, WM intends to combine a number of adjacent parcels it owns pending approval of the CUP and Site Plans. While not required in order to commence site preparation and development, WM should be required to file a certified survey map (CSM) for purposes of combining their parcels within (90) days after Village Board action on the CUP application.

The WM site contains wetlands on the west side of the property associated with the navigable Nor-X-Way Channel that meanders through the wooded area north and west of the proposed facility. An updated wetland delineation is required for the property to ensure site development does not encroach into any wetland or the Village's 25' wetland setback. As shown on the site plans, development is proposed in a manner that does not come close to, much less encroach into, the wetland areas as previously identified by the WisDNR. Nonetheless, a delineation is needed and should be required to be prepared and submitted to the Village within (90) days after Village board action on the CUP (if approved).

Finally, WM has provided a clarification to information provided at the February 11 2019 public hearing regarding the CNG operation. At that time it was stated that the CNG to be used on the property did not contain the same odorant found in gas supplied to homes and businesses. At this time WM indicates the CNG used at this facility will contain the same odorant.

Inspection Services

Inspection Services has indicated that the submission of state-approved plans will be required prior to issuing a building permit along with the required $20,000 occupancy bond.

Fire Department/Police Department

The Fire Department has been working cooperatively with WM regarding the issues of providing adequate fire flow and hydrants to the site. The Fire Department is recommending approval of the project subject to the following additional requirements not already reflected in the plans:

1. The existing Knox Box shall be relocated to a mutually-agreeable location approved by the Germantown Fire Department;
2. The maintenance building and office will require fire sprinkler protection per IBC 903.2.9.1;
3. The Fire Department Connection (FDC) location shall be approved by the Germantown Fire Department;
4. A new main gate shall be installed at the southeast corner of the fenced area on the south side of the maintenance parking lot;
5. State approval is required for the 10,000 gal above-ground diesel fuel storage tank.

All exterior doors (except primary entrance) shall be clearly marked with reflective 5" or larger letters/numbers to aid emergency personnel access as required by the Police Department.

Engineering

The Village Engineer, Surveyor and Public Works Department staff has identified a few technical issues, plan corrections and code-based requirements that need to be addressed and/or incorporated into the site development and building plans. (see February 12, 2019 Village Engineer memo). WM has responded to these items in a March 1, 2019 letter and revised plans and supplemental information. WM's responses contained in their March 1, 2019 letter should be made conditions of approval for the Site Plans.

Village Planner Recommendation:

Conditional Use Permit

APPROVE a conditional use permit (CUP) for Waste Management of WI (WM), property owner to develop and operate a 35,035 sqft truck maintenance facility from the property located at N96 W13840 County Line Road subject to the following conditions:

1. The uses and activities allowed on the property shall be limited to those uses and activities and relative locations specified in the conditional use permit (CUP) and site plan application materials dated January 4, 2019, and supporting documents including a February 11, 2019 letter from Lynn Morgan, and a March 1, 2019 letter from Diversified Engineering Inc. The physical facilities from which said uses and activities are permitted include those as presented in the detailed site development and building plans dated March 1, 2019. Days and hours of operation shall be limited to those specified in the CUP application and supporting materials submitted to the Village. This permit shall Include the right to install and use a 10,000 gal above-ground storage fuel tank (AST) to be installed on the site.
2. All temporary and permanent exterior signs require a permit and shall comply with all current sign regulations. Off-premise advertising and directional signage is regulated by the Village and requires a permit if/when allowed.
3. In the event the Village receives complaints regarding noise negatively affecting the nearby residential areas that is coming from the truck maintenance facility operation, including but not limited to noise from truck-mounted backup alarms, WM will cooperate with the Village in resolving the issue. WM has indicated that they will replace the backup alarms with “white noise” warning devices if this noise becomes a problem.
4. The LED fixtures proposed for installation and use on the building and site have the ability to be dimmed at no or low activity periods during the day. WM shall provide a mutually-agreeable schedule or plan detailing when and to what lighting levels the building and/or site lighting will operate and be dimmed on the site should be prepared and submitted to the Village as part of the operational plan. In the event the Village receives complaints regarding light and/or glare coming from the truck maintenance facility site that is not Village Code compliant or becomes public nuisance negatively affecting the nearby residential areas, WM will cooperate with the Village in resolving the issue.
5. No trash, recyclables or other waste material that may create an odor negatively affecting the nearby residential areas shall be kept on the property or in the waste removal/recycling trucks stored on the property.
6. If the use, activities and/or operation subject of this permit falls out of conformity with the conditions herein, or where there is a change in the nature, character, intensity or extent of the permitted conditional uses and activities which cause special problems or harmful effects associated with the permitted uses and activities that were not revealed or anticipated at the time this CUP was granted, or, where conditions imposed by this CUP that were anticipated to mitigate or eliminate harmful effects associated with the uses and activities but are subsequently insufficient to do so, or, for similar cause based upon consideration for the public comfort, safety, and welfare, this conditional use permit may be terminated or modified by the Village Board by the amendment to or addition of conditions after public hearing thereon.

Village Planner Recommendation:
Conditional Use Permit *(cont)*

7. WM intends to combine a series of adjacent parcels pending approval of the CUP and site development and building plans. WM shall file the certified survey map (CSM) for purposes of combining their parcels within (90) days after Village Board approval of this CUP.
8. WM shall prepare and submit to the Village an updated wetland delineation for the property to ensure site development does not encroach into any wetland or the Village's 25' wetland setback. The CSM shall be submitted to the Village within (90) days after Village Board approval of this CUP.

VILLAGE PLANNER RECOMMENDATION:

Site Development & Building Plans

APPROVE the site development and building plans for a 35,035 sqft truck maintenance facility from the property located at N96 W13840 County Line Road subject to the following conditions:

1. This approval is subject to all the conditions and requirements set forth herein and adopted by the Plan Commission. Approval is granted for the architectural and engineering plan set dated March 1, 2019, and the site plan application materials dated January 4, 2019, and supporting documents including a February 11, 2019 letter from Lynn Morgan, and a March 1, 2019 letter from Diversified Engineering Inc., unless superseded by subsequent plan sheets approved by the Village Planner or Engineer pursuant to revisions required herein and/or by the Plan Commission.
2. All landscaping, screening, grading, paving, storm water management, utility and other improvements that are not fire-safety related as shown on the approved site plans shall be installed as proposed prior to issuance of an occupancy permit unless a cash bond or letter of credit in an amount equal to 120 percent of the estimated installation and material costs reviewed and approved by the Village is submitted to the Village as necessary to ensure that installation of the proposed features and improvements will be completed within one (1) year after issuance of the occupancy permit.
3. The following items shall be provided as required by the Village Fire Department: (a) a Knox Box shall be located and installed to a mutually-agreeable location approved by the Germantown Fire Department; (b) the maintenance building and office will require fire sprinkler protection per IBC 903.2.9.1; (c) the Fire Department Connection (FDC) location shall be approved by the Germantown Fire Department; (d) a new man gate shall be installed at the southeast corner of the fenced area on the south side of the maintenance parking lot at a mutually-agreed to location and design with the Germantown fire Department; (e) State approval is required for the 10,000 gal above-ground diesel fuel storage tank.
4. All exterior doors (except primary entrance) shall be clearly marked with reflective 5” or larger letters/numbers to aid emergency personnel access as required by the Police Department.
5. All technical issues, corrections and plan requirements identified by the Village Engineer and Public Works Department staff (see February 12, 2019 Village Engineer memo) shall be addressed and reflected in revised plans and/or supplemental information reviewed and approved by Village staff prior to issuance of a building permit (excluding “early start” site clearing and footing/foundation work approved by the Village and/or WI DSPS).
6. WM shall cooperate with the Germantown Fire Department and Menomonee Falls engineering and water utility to ensure adequate water supply and fire flow pressure is provided to the proposed maintenance facility, including conducting pressure testing. WM shall install new fire hydrants and/or other water system improvements required by Menomonee Falls.
7. State approved plans and a $20,000 occupancy bond are required by the Building Inspection Department as part of the building permit application.
8. WM shall prepare and submit to the Village an updated wetland delineation for the property to ensure site development does not encroach into any wetland or the Village’s 25’ wetland setback. The CSM shall be submitted to the Village within (90) days after Village Board approval of the CUP. In the event development encroaches into a wetland or 25’ wetland setback, WM shall obtain the necessary WisDNR and Village permits, or, modify the site development accordingly.

VILLAGE PLANNER RECOMMENDATION:

Site Development & Building Plans *(cont.)*

9. All landscaping, screening, grading, paving, storm water management, utility and other improvements that are not fire-safety related as shown on the approved site plans shall be installed as proposed prior to issuance of an occupancy permit unless a cash bond or letter of credit in an amount equal to 120 percent of the estimated installation and material costs reviewed and approved by the Village is submitted to the Village as necessary to ensure that installation of the proposed features and improvements will be completed within one (1) year after issuance of the occupancy permit.
10. WM shall revise the landscape plan to address the Village's street tree requirements. At a minimum, additional street trees in an amount equal to one (1) tree per 50 feet of road frontage of the existing Port-O-Let parcel shall be added to the plan and installed in addition to the site landscaping already shown in the landscape plan. Further, the landscape plan specifies 3" caliper White Spruce and Black Hills Spruce trees. Unlike deciduous trees, evergreen trees are typically discussed in terms of total height (vs. trunk caliper) under the Village's landscaping and street tree guidelines. A typical planted size of evergreen trees in Germantown is a minimum of 6-8 feet. If the 3" caliper evergreen trees that WM intends to install as shown on the landscape plan are, in fact, a minimum of 6'-8', nothing more needs to be done. However, if a 3" caliper evergreen tree is less than 6' in height, the landscape plan needs to be revised to reflect a minimum planted height of 6'-8' for evergreen trees.
11. WM shall cooperate with the Menomonee Falls engineering and highway departments to ensure adequate road and intersection capacity and level of service is provided to the proposed maintenance facility and adjacent road system, including the driveway intersections onto County Line road and the Fond du Lac Ave/STH145 intersection. WM shall install and/or contribute to the cost of all road and intersection improvements deemed necessary as a result of or contribution of traffic generated to/from the proposed truck maintenance facility as required by the Menomonee Falls Village Engineer.

Engineering Department Memorandum

To : Larry Ratayczak, Public Works Director

From : Eric Nitschke, Village Engineer

Date : February 12, 2019

Re :Development Review for Waste Management's Proposed Truck Maintenance Facility

---

Larry,

Included you will find the review comments pertaining to the Waste Management Truck Maintenance Facility from myself and staff.

Waste Management Truck Maintenance Facility – Site Review

1. Sanitary comments
    a. All new sanitary, regardless of diameter, will be constructed per Village details and specifications.
    b. The existing lateral shall be evaluated for the feasibility of reuse. Documentation of the inspection shall be furnished to the Village prior to any construction.

2. Water comments
    a) Water will be provided from the Village of Menomonee Falls. Germantown requires service to be metered with a Germantown meter for billing.
    b) There are to be no shared water meters.

3. Highway comments
    a. Awaiting comments from Washington County regarding access to County Trunk Highway Q.

4. Engineering comments
    a. This project may require an NOI based on the pond locations in relation to the wetlands and navigable waterway just to the west. Please work with WisDNR to verify.
    b. Page 3 and page 5 of the Storm Water Report (SWR) refers to TR-55 Type II rainfall data. NOAA Atlas 14 rainfall data is to be used throughout the analysis.
    c. Water quality calculations are to be provided in the Storm Water Report.

d. Best Management Practices (BMP's) are to be utilized to address water quality in sub-basin 1.
e. Show time of concentration (TC) assumptions on page 4 of the SWR.
f. The outfall locations for all three sub-basins are to be stabilized beyond the specified rip-rap, as well as utilize level spreaders to protect the downslope area from erosion.
g. There is a question regarding the proposed ditches on the north and west side of the site.
    i. Sizing calculations should be provided for the ditches.
    ii. A minimum 1% slope is required.
    iii. Erosion matting in the ditches is required.
    iv. Maintenance of ditches may be an issue. Please provide snow storage locations on the plans. Snow storage should not be in a location that compromises the drainage plan. (As an example, refer to the NE corner of the parking lot in sub-basin 3.)
    v. The northern pond will discharge through the ditches rather than over the designed emergency spillway. This should be corrected.
    vi. The western pond may not have enough freeboard from the top of berm to the 100-year elevation. This may also create a problem in the ditches just to the north of the proposed pond.
h. Provide inlet capacity calculations.
i. Provide storm sewer calculations.
j. 100-year overland flow routes are to be identified on the plans.
k. For the tracking pad utilize WisDNR Trackout Control Practices Technical Standard 1057.
l. Follow WisDNR Wet Detention Pond Technical Standard 1001 to determine if the proposed ponds require liners.
m. The outlet structures are to have anti-seep collars.
n. A detailed erosion control plan is required. The current plan does not provide construction sequencing or level of detail necessary to prevent erosion from leaving the site.
o. Construction sequencing should address the removal of the easterly construction entrance.
p. A pond maintenance agreement must be submitted and approved prior to occupancy.
q. Remove the "Additional Parking Area" on sheet C1.3 or account for the additional impervious area in the Storm Water Management Plan.
r. On sheet C1.10 details of light-duty and heavy-duty asphalt are to be provided.
s. On sheet A1.0 the women's locker room is to have an additional partition or doorway between the entrance and the locker room area.

Finally, please refer to the memo that Bob Beilfuss provided on January 21, 2019 regarding the land division and dedication review.

From: Steve Smith [ssmith@germantownfiredept.com]
Sent: Monday, February 04, 2019 5:12 PM
To: Jeff Retzlaff
Cc: John Delain
Subject: GFD Plan Commission comments for 2/11/2018

Jeff:

Waste Management on County Line Road. Site Plan and Conditional use permit. Approval recommended with following:

1. Since all of the property is owned by Waste Management our comments include the existing site.

[NJB] OK.

1. Supply (3) additional approved fire hydrants looping to existing watermain along existing east access road (formerly Midlands drive) to the new fire hydrant near new office building on the south side. Hydrant locations and painted color to be determined.

[NJB] I would like to set up a time to meet and perhaps either walk the site or sit and review the plans to see what locations you would like to place the additional hydrants. Fire hydrant flow to be 2500gpm. GFD can meet on site for hydrant placement. When?

1. This site is supplied by the village of Menomonee Falls water department.

[NJB] Correct.

Who will be conducting required flushing and hydro testing?

[NJB] Testing will be coordinated by the site GC following project bidding. All tests will comply with the requirements by the Village of Menomonee Falls water utility for water service or fireline installation, or subsequent requirements for the Village of Germantown. Ok.

Backflow preventers may be required, not reducing water flows to new hydrants.

[NJB] Our mechanical engineer is aware and will examine further during building plan MEP design. OK.

1. What is the normal flow of trucks using the new west access. East Drive may needed to be widen. Will the manual gate near CNC compound be open?

[NJB] The truck general traffic flow will be staged in launches at 4:00am/5:15am/6:00am. Each launch will consist of 30-35 trucks, with launching procedure to exit the east drive. As trucks complete routes throughout the day, they will return via the western entrance. At 25', we feel the East drive is sufficient for anticipated traffic loading. The manual gate near the CNG compound will be opened for launch operations. OK, now that we understand traffic flows and additional fire hydrants on site.

1. Truck maintenance building and office will likely require fire sprinkler protection per IBC 903.2.9.1 State approved plans required. FDC location to be approved by GFD.

[NJB] Correct, both the maintenance shop and office will be fire sprinkler protected.

1. Is the CNG compound open to atmosphere? (no roof) [NJB] There is no roof, the compound is open to atmosphere

1. Local GFD permit fees and inspections required.

[NJB] OK.

1. Install man gate at SE corner of fenced area on south side of the truck maintenance lot.
2. There are a large number of retaining walls on site. Can the actual hiegh be noted on each end of the walls?
3. Existing Knox box (emergency fire department access) needs to be relocated to location to be approved by GFD.
4. State approval required for 10K Fuel station.

We have been working with Nick Berner of Diversified Engineering. Color key Blue first comments by GFD. Red= Nick Berner, Green GFD reply.

Thanks-

FI Steven Smith
Germantown Fire Dept
N115W18752 Edison Dr
Germantown WI 53022-3136

(262) 502 4701
ssmith@germantownfiredept.com

WASTE MANAGEMENT

W132 N10487 Grant Drive
Germantown, Wisconsin 53022

February 11, 2019

Jeff Retzlaff, AICP, Director
Community Development Department
Village Planner & Zoning Administrator
Village of Germantown
N112 W17001 Mequon Road
Germantown, WI 53022-0337

RE: Partial response to staff review comments concerning Conditional Use Permit & Site Plan Applications

Dear Mr. Retzlaff:

This letter provides information requested in items 1a.-j of your February 6, 2019 staff review comments regarding our conditional use permit & site plan applications.

1. **Please provide a more thorough explanation/description of the following operational aspects of the proposed facility:**

   a. **What activities are expected to be going on during the 3:45a.m. to 12 midnight hours of the day? Specifically, during the 3:45 to 8:00a.m. and 10:00pm to 12 midnight time periods?**

   Activities throughout each day will include:
   Fleet: Fueling and maintenance of our waste and recycling collection vehicles and container delivery vehicles
   Hub: Overnight vehicle parking and terminus for driver arrivals and departures; driver training and management
   Sales: Base of operations for north metro sales associates and sales support

   3:45 a.m. - 8 a.m.
   - Managers, administrative staff, a.m. technicians and drivers arrive in waves dependent on start times
   - Trucks launch in three waves (currently at 4 a.m., 5:15 a.m. and 6 a.m.); most will not return until end of workday

   8 a.m. – 4 p.m.
   - Sales staff arrives; some remain on site throughout day, others depart
   - Managers arrive and depart throughout day
   - a.m. technicians conduct vehicle maintenance and repair; occasionally depart to service vehicle in field
   - Container delivery and roll-off vehicles may arrive and depart to retrieve/drop off empty boxes

- Trucks begin returning for day as early as 2 p.m. as each truck completes its route, drivers conduct post-trip vehicle inspections, fuel their vehicles and then depart in their personal vehicles for day
- p.m. technicians arrive for 3 p.m. shift

4 p.m. – 10 p.m.

- Almost all trucks have returned by 4 p.m.
- Managers, sales and admin depart by 6 p.m.
- p.m. technicians continue servicing vehicles

10 p.m. – 12 a.m.

- p.m. technicians complete nightly vehicle maintenance and repair

b. What activities and/or services will be conducted on the property and in the two building(s)?
Please see response a., above.

The floor plan indicates sales offices. What operations or activities other than truck maintenance will be conducted?
The facility will house a small team (approximately 11 people) of inside and outside sales associates and sales administrators.

Are other business operations being re-located to this facility? From where?
No other operations are relocating to this facility.

c. What products, materials, vehicles (type, number, etc.) and other equipment will be kept/stored on the property?

	Current	**Projected, 5 years**
Products	None	None
Materials	Vehicle parts, tires, fluids	Comparable
Vehicles	• Diesel fueled waste collection vehicles, various types, ~ 80 • Light- and heavy-duty pick-up trucks, ~ 9 • Container delivery trucks, 3 • Boom trucks, 3	• Waste collection vehicles, various types, up to 100, primarily fueled by compressed natural gas • Light- and heavy-duty pick-up trucks, ~ 9 • Container delivery trucks, 3-4 • Boom trucks, 3
Other Equipment	• Truck fueling equipment • Empty waste containers, number fluctuates • Forklift • Truck lift • Tools typical of truck repair • Typical office equipment such as computers, servers, copiers, printers etc.	• Truck fueling equipment • Empty waste containers, number fluctuates • Forklift • Truck lift • Tools typical of truck repair • Typical office equipment such as computers, servers, copiers, printers etc.

d. How does the CNG compound function as part of the operation?

Waste Management has been operating compressed natural gas (CNG) trucks since the 1990s. Today we run more than 6,000 of our trucks on CNG, the world's largest fleet of heavy-duty CNG-fueled vehicles.

CNG trucks use the same gas used for heating and cooking, but compressed for storage. Natural gas is a domestic fuel and reduces reliance on foreign fuels. Compared to diesel, CNG significantly reduces emissions, and CNG trucks are also quieter.

The CNG compound accesses existing public utility natural gas pipelines and compresses the gas (5-300 PSI) to high pressure for storage onboard the CNG vehicles (3600 PSI). Minimal quantities of fuel are stored at the CNG station. Gas storage is used to buffer between the fueling demand and compressor start-up time. Compound equipment includes compressors, dispensers and dryers.

The compound supplies CNG to truck fueling systems in the truck parking area. When trucks are parked for the day, the drivers attach their trucks to the fueling system and the truck's onboard tanks recharge overnight.

e. **What is the estimated amount of vehicle (non-truck) and truck traffic expected to be generated to/from the property on a daily and 6:00 to 8:00am and 4:00 to 6:00p.m. peak-hour basis?**

	Daily Total	6-8 a.m.	4-6 p.m.
Vehicle Trips	60-70	30-35	30-35
Truck Trips	200	0-5	25-40

f. What is the expected traffic distribution to/from the property along the adjacent road system (i.e. % of traffic expected to travel in which directions on which adjacent streets)?

Please see provided table.

	a.m. employee arrivals and p.m. departures	a.m. facility departures				p.m. facility returns	
		East drive, east-bound		West drive, west-bound		Return from east	Return from north
Truck	none	50%	30% continue east on Hwy. Q 10% turn north on Wausaukee 60% turn south on Boundary	50%	25% continue west on Hwy. Q 25% turn north on Hwy. 145 50% turn south on Hwy. 145	60% originating from landfill (Boundary Rd. to Hwy. Q to base). Almost all will use west driveway.	40% originating from Grant Drive recycling facility (of which half will approach from Hwy. 145 and half from Wausakee Rd. Almost all will use west driveway.
Vehicle	Roughly half of employees will arrive and depart to work from the east and half from the west. All will use the west driveway.						

g. What is the planned traffic circulation within the site? Specifically, will truck traffic enter & exit exclusively from the west driveway on County Line Road, the east driveway (a.k.a. Midland Drive), or both?
Both, please see response f above. Both drives will be used for morning launches, however the western driveway will be used for end-of-day return to base. Passenger vehicles will use the west drive exclusively.

h. Trucks & other vehicles to be serviced within the maintenance facility building
Collection trucks and container delivery trucks will be serviced within the maintenance building. No passenger vehicles or other equipment will be maintained at this location.

i. How the pull-through and back-in vehicle "launch" process will be work and monitored to reduce/prohibit the sort of back-up warning device noise nearby residents will be concerned with?
Truck backing is unlikely to generate noise that will create a nuisance. If back-up alarms do become a nuisance, we have identified a low-impact alarm that can be installed on our trucks. The low-impact alarm greatly reduces the audible range and softens the noise type for the alarm. It is not known whether pull-through launching can be accommodated.

j. What is the proposed timing/duration for the exterior lighting? Specifically, the lighting plan indicates fixtures with dimming capabilities. Will the property be lit to the fullest extent capable with the proposed lighting fixtures on a 24/7 basis?
No. Full lighting will be needed from 3:45 to sunrise, and again from sunset to 6 p.m. (whichever is earlier). Overnight, only the maintenance building and select security lights will be lit.

<u>Review question 2</u>
The M-2 Zoning District (Section 17.43 Zoning Code) allows above-ground storage tanks as a permitted accessory use, but only one (1) tank up to 5,000 gal. capacity. Additional AST storage may be permitted with a conditional use permit (CUP) under 17.43(3). The proposal includes one (1) AST with 10,000 gal. capacity. We will add the 10,000 gal AST to the list of proposed uses to the CUP application. Are there any other AST's or underground storage tanks proposed on the site or within the maintenance building?
The site is designed to have one (1) 10,000 gal AST as noted on the site plan. No other proposed UST or AST storage tanks are proposed at the site or within the building. The maintenance building will house various vehicle maintenance fluids within UL 142 flame shield, dual-wall tanks not to exceed 500 gallon storage capacity. These fluids will consist of but are not limited to anti-freeze, transmission fluid, vehicle oil, and grease.

We hope this information facilitates your review and will be providing responses to the additional questions in the near future.

Sincerely,

/s/

Lynn Morgan
Manager of Public Affairss

Diversified Engineering Inc.
CONSULTING ENGINEERS & SURVEYORS

March 1, 2019

Jeffrey W. Retzlaff, AICP
Community Development Director
Zoning Administrator
Village of Germantown, WI
N112 W17001 Mequon Road
Germantown, WI 53022

RE: Waste Management Truck Maintenance Facility: Staff Review Comments, Plan Commission Hearing Note

Community Development Department

Community Development Department Review Comments 1 & 2:
These were responded to on February 8, 2019, however Table 1 provided in response to question 2.f. was incorrect. A corrected Table 1 is attached.

Community Development Department – Review comment 3:

As noted on Sheet C1.1 in the Site Plan set, a certified survey map (CSM) is required in order to combine the four (4) adjoining parcels owned by WM. According to preliminary discussions with the Village Public Works/Highway Department, the Village is likely to agree to vacate the 66' x 413' section of public right-of-way so that it, too, can be incorporated into the WM property. A recommended condition of approval for both the CUP and Site Plan applications will require WM to file a CSM application within a prescribed period of time after (and assuming) approval of the CUP.

Response: Upon CUP approval, all required certified survey maps, parcel incorporation, and application processes will be completed prior to site construction.

Community Development Department – Review comment 4:

As discussed, a wetland delineation is required. Given that the proposed improvements appear to avoid the wetlands based on the representation of the current, unverified wetland boundary shown on the plans, it's unlikely that the storm water basin and future parking lot along the west side of the property will be affected if the verified wetland boundary is located further to the east. Nonetheless, we need a copy of the wetland delineation report once completed and, if necessary, revised site plan sheets depicted the verified wetland boundary. DNR & ACOE wetland delineation concurrence letter(s) are also required if appropriate.

Response: A wetland delineation will be completed at the earliest available time as weather permits. After which time all required set-backs will be clearly marked and all necessary site adjustments made. A final site plan with clear boundary offsets will be sent to the required village representatives.

Community Development Department – Review comment 5:

The existing paved parking lot (and possibly the building) associated with the port-a-let facility appear to fall within the 25' wetland setback from the unverified boundary. What removal and/or restoration work will be done in this area and how will the wetland be protected?

Response: The area will have E&S BMPs along the western edge of the existing hard surface and existing structure to protect the wetland from construction activities. The existing structure and hard surface within the final wetland boundary offset will then be demolish, back filled and graded to drain, top soil spread and seeded. Once approved vegetation growth has been reached, the E&S controls will be removed and any additional areas seeded as needed.

Community Development Department – Review comment 6:

In addition to the 25' wetland setback, the Village requires a min. 75' setback from the high water mark of any navigable water. The Nor-X-Way Channel (main tributary to the Menomonee River) located along the west side of the WM property is a navigable waterway and subject to the Village's 75' "no touch" setback. The navigable waterway OHWM, 100-year floodplain, wetland boundary and respective 75' and 25' setbacks need to be <u>clearly</u> shown on the appropriate site plan sheets (and on the future CSM).

Response: A wetland delineation will be completed at the earliest available time as weather permits. At which time the ordinary high water mark for the Nor-X-Way channel will be established along with the necessary 75' "no touch" setback. An approximate Nor-X-Way centerline, assumed ordinary high water mark and additional 75' setback boundary locations have been shown on the plan set and highlighted on sheet C1.3. Once the field locations have been determined all necessary site adjustments will be made to abide to the 75' setback. A final site plan with clear boundaries and setbacks will be sent to the required village representatives.

Community Development Department – Review comment 7:

Apart from the building elevations shown on Sheet A2.0, there is no detail showing how the over-head CNG refueling stations work or appear. Are there underground or overhead pipes to be installed leading from the CNG compound to the individual parking stalls? If overhead, what structures are proposed? What do they look like? Similarly, the lighting plan shows quite a number of lighting fixtures (68) to be surface-mounted at the end of the parking stalls. Surface-mounted to what?

Response: An elevation detail for the CNG truss fueling system has been added to the plan set on sheet A1.2. This detail calls out the elevations and locations of lighting and overhead pipes. All pipes feeding to the trusses from the compound will be below ground.

Community Development Department – Review comment 8:

Elevations are required for all four sides of the building. Sheet A2.0 only shows the west and north elevations. The elevation facing County Line Road will be critical for the Plan Commission. A color rendering of the building is also required. The elevation plans need to include elevation, dimension and material call-outs or notes (roof height is measured to the peak and should be shown to help determine code compliance for building height.

Response: Sheet A2.0 has been updated to include color rendering elevations for all sides of the proposed building and additional callouts for heights and materials.

Community Development Department – Review comment 9:

No signage or sign "placeholder" is shown. If eventually proposed, any ground-mounted monument sign will require a minimum setback of 5' from the sign base to the nearest property line. Separate sign permit approval will be required (see 17.46 of the Zoning Code for sign regulations). If the wall-mounted WM logo shown on sheet A2.0 is the only signage proposed, can you provide a supplemental sheet indicating details for this sign; including materials, dimensions, lighting (if any). We can include approval of that sign as part of the site plan approval (and any monument signage proposed if similar details showing compliance with 17.46 are also provided). Please note that the existing "Port-O-Let" monument sign at the west driveway does not comply with the Village's sign regulations. If the desire is to modify this sign with a new panel for the truck maintenance facility, said modifications will be required to meet current requirements (including address coordinates, landscaping around the base, lighting restrictions, etc.).

Response: At this time, Waste Management intends to place a monument sign along County Line Road, however the exact material and size has not yet been determined. It will be our intent to apply for a separate permit approval for the signage at a later date. The WM logo on the building will be aluminum and no lighting will be provided that is not currently shown on the plan set.

Community Development Department – Review comment 10:

The proposed site lighting (shown in the lighting plan Sheet X1.0) indicates the fixtures will be mounted on 30' tall poles. The Village's maximum height for exterior fixtures on free-standing poles is 25' including any base material. Please revise the plan accordingly.

Response: All fixtures have been adjusted to be within the 25' maximum height for exterior fixtures, see sheet X1.0.

Community Development Department – Review comment 11:

A roof plan sheet is required and needs to show any/all roof-mounted mechanicals (assumed dimensions if no details available). The Plan Commission may require screening of any roof-top mechanicals (if any proposed) depending on the number, dimensions and relative location of any RTU's proposed.

Response: The building plans do not include any roof top mounted units. All fan locations have been noted on the elevation views shown on sheet A1.1.

Community Development Department – Review comment 12:

The parking calculations note on Sheet C1.3 indicates that an additional parking area with 44 stalls will be installed "… if required for future tenant". Please explain what future tenant may operate from the property and when that might occur. Will the additional parking area be constructed to the same standard as the other vehicle parking area? e.g. curb & gutter, landscaped islands, etc. Has the additional impervious surface for this additional parking area been accounted for in the storm water analysis? If so, please indicate as much on the plan sheet(s) and/or notes so that it's clear this future parking area is proposed to be included in the initial site plan approval (and not require separate approval if nothing changes in the design/layout between the original proposal and whenever the additional parking area is needed).

Response: The future parking area has been removed from the plan set. The site will utilize the proposed 166 spaces noted on the plans.

Community Development Department – Review comment 13:

New fencing (i.e. 6' woven-wire "cyclone") is shown on the plan around the perimeter of the building and north parking area. Please include a detail drawing showing the proposed fence appearance, specifications and any accessories added on top (e.g. barb-wire, pigeon spikes, etc.).

Response: A fencing exhibit has been added to the plan set, sheet X1.1 depicting the fencing to be removed and the location of the new fencing. A detail for the proposed fence has also been added to this sheet.

Community Development Department – Review comment 14:

What will be done with the existing fencing and gates around the frontage/perimeter of the property? If any portion is retained, how will it be integrated into the proposed fencing?

Response: A fencing exhibit has been added to the plan set, sheet X1.1 depicting the fencing to be removed and the location of the new fencing with tie-in locations noted along the frontage to the east side of the property.

Community Development Department – Review comment 15:

Street trees are required along the County Line Road property frontage (deciduous with min. 3" dia). The deciduous trees included in the proposed landscaping along County Line Road are acceptable, however, the proposed planting size @ 2" is less than required. Please increase the planting size for the deciduous trees along County Line to 3" min. (As far as the remaining frontage to the east along the other parcels that are intended to be combined, the existing landscaping will suffice).

Response: The landscaping along the front and east side of the property has been adjusted to reflect the natural area utilizing deciduous and evergreen rather than the previously proposed design. All planting has been noted to 3" min.

Community Development Department – Review comment 16:

The proposed landscaping along the south and east sides of the new parking area closest to County Line Road is sparse. Because the plant materials are shown in the landscaping plan Sheet L1.0 at full growth (e.g. 2" dia deciduous trees shown with 35' crown dia, 5-gal Spirea @ 5' spacing shown with 5' dia spread) the plan appears more "robust" than reality.

Response: The landscaping along the front and east side of the property has been adjusted to reflect the natural area utilizing deciduous and evergreen rather than the previously proposed design.

Community Development Department – Review comment 17:

Although the Zoning Code (Section 17.43(5)(b)2.ii) is non-specific in terms of the minimum type or quantity of landscaped features to be included, a "rule of thumb" deemed acceptable by the Plan Commission for similar industrial-type development projects has been a minimum of two deciduous trees, two evergreen trees and 15-20 shrubs (deciduous, evergreen or combination of both) per 1,000 sqft of landscaped area (typically 10' wide x 100' long). The current proposal has approximately two deciduous trees and 10 shrubs per 1000 sqft. Staff recommends increasing the number of trees along the south side of the parking area from 8 to 16 and include a mix of deciduous (with a minimum of 8 to satisfy the street tree requirement) and evergreen to better buffer the parking lot, and, increase the number of evergreen and deciduous shrubs. In addition, you may want to consider increasing the height of the berm shown along County Line Road with more undulation and less of a "soldier row" look to the plantings.

Response: The landscaping along the front and east side of the property has been adjusted to reflect the natural area utilizing deciduous and evergreen rather than the previously proposed design.

Fire Department

Fire Department – Review comments address previously:

Response: We have meet with Steve Smith on site to discuss his comments. Additional information is being gathered for the existing hydrants along the existing east drive. All other comments have been addressed and a follow up with Steve will be done once all flow information is received.

Village Surveyor

Village Surveyor – Review comment 1:

(Comment is an abstract from the Land Division Dedication Review Narrative, dated 1/21/19) The proposed location of the new facility crosses the common boundary line between the two tracts of land. For this to happen, Engineering would need the two tracts combined with a new Certified Survey Map (CSM).

The new CSM would include a 60' R/W dedication across the unplatted portion of the easterly tract. I (Bob Belifuss) would propose we vacate the existing R/W strip in return for the new R/W dedication. This strip is not offering any benefit to the village currently.

Response: Upon CUP approval, all required certified survey maps, parcel incorporation, and application processes will be completed prior to site construction. In addition to any required village R/W incorporation or replatting.

Village Surveyor – Review comment 2:

(Comment is an abstract from the Land Division Dedication Review Narrative, dated 1/21/19) The section of roadway on CTH-Q is not under Village's jurisdiction for maintenance. This could be under Washington County or the Village of Menomonee Falls jurisdiction.

Response: The section of CTH-Q is under the Village of Menomonee Falls jurisdiction. We have meet with the village engineer and will continue to work with their department to fulfill all requirements for the future facility access.

Village Surveyor – Review comment 3:

(Comment is an abstract from the Land Division Dedication Review Narrative, dated 1/21/19) I noticed on the proposed grading plan that they are proposing construction of two (2) new detention ponds with forebays. We will need a stormwater maintenance agreement between WM and the Village for the new ponds. This would include a pond certificate once the pond has been constructed and established.

Response: A pond maintenance agreement will be completed by Waste Management prior to site construction permits.

Village Surveyor – Review comment 4:

(Comment is an abstract from the Land Division Dedication Review Narrative, dated 1/21/19) All plans, maps and Certified Survey Maps need to be signed and sealed by a Wisconsin Professional Land Surveyor and a Wisconsin Professional Engineer.

Response: Upon completion of site wetland and stream delineation and necessary offsets, the plans will be stamped by a Wisconsin Professional Land Surveyor. Following site delineation offsets, necessary grading changes, site geotechnical exploration, wall design completion, and final pavement design the plans will be stamped by a Wisconsin Professional Engineer.

Public Works/Engineering Department

Public Works/Engineering Department – Review comment 1:

Sanitary comments

a. All new sanitary, regardless of diameter, will be constructed per Village details and specifications.

b. The existing lateral shall be evaluated for the feasibility of reuse. Documentation of the inspection shall be furnished to the Village prior to any construction.

Response: The sanitary has been adjusted to tie-in a new lateral to the existing manhole along north side of CHT-Q. The existing lateral will be evaluated for tie-in feasibility but we will plan to cut, cap and abandon the existing location lateral. All new sanitary will be constructed per Village details and specifications. All documentation on existing lateral inspection will be sent to required Village of Germantown staff prior to construction.

Public Works/Engineering Department – Review comment 2:

Water comments

a. Water will be provided from the Village of Menomonee Falls. Germantown requires service to be metered with a Germantown meter for billing.

b. There are to be no shared water meters.

Response: The Village of Menomonee Falls is requiring a Menomonee Falls water meter on their line. Would a meter on the sanitary outlet for the site suffice for billing purposes? Please advise.

Public Works/Engineering Department – Review comment 3:

Highway comments

a. Awaiting comments from Washington County regarding access to County Truck Highway Q.

Response: The section of CTH-Q is under the Village of Menomonee Falls jurisdiction. We have meet with Menomonee Falls' engineer and will continue to work with their department to fulfill all requirements for the future facility access.

Public Works/Engineering Department – Review comment 4: (Responses at each sub-comment)

Engineering comments

a. This project may require an NOI based on the pond locations in relation to the wetlands and navigable waterway just to the west. Please work with WisDNR to verify.

Response: A NOI will be required for the site construction. Following final site construction plans an NOI will be furnished prior to construction.

b. Page 3 and page 5 of the Storm Water Report (SWR) refers to TR-55 Type II rainfall data. NOAA Atlas 14 rainfall data is to be used throughout the analysis.

Response: NOAA Atlas 14 rainfall data is used in the analysis. TR-55 is referenced because procedures outlined in that document were utilized to determine the approximate required size of each detention pond.

c. Water quality calculations are to be provided in the Storm Water Report.

Response: Water quality calculations showing detention pond's ability to remove 80% TSS have been added to the SWR.

d. Best Management Practices (BMP's) are to be utilized to address water quality in sub-basin 1.

Response: BMP's for sub-basin 1 is the reduction of impervious area. Sheet 2 of the SWR discusses the reduction in impervious area for sub-basin I. Also, table 1 – sheet 3 of the SWR shows a breakdown of impervious areas for each sub-basin.

e. Show time of concentration (TC) assumptions on page 4 of the SWR.

Response: Time of concentration notes have been added to sheet 4 (SWR). Procedures outlined in Part 630 of the National Endineering Handbook Chapter 15, Section 630.1502 (a) "Watershed Lag Method" were used to estimate the time of concentration. Steps for determining the longest flow path and average land slope have been elaborated in the SWR.

f. The outfall locations for all three sub-basins are to be stabilized beyond the specified rip-rap, as well as utilize level spreaders to protect the downslope area from erosion.

Response: Rip-Rap protection has been extended on the site plan. Level spreaders have been added near the boundary of the site outlet points. See plan set sheet C1.8.

g. There is a question regarding the proposed ditches on the north and west side of the site.

i. Sizing calculations should be provided for the ditches.

Response: Ditch sizing and shear stress calculations have been added under section 2.7 in the SWR.

ii. A minimum 1% slope is required.

Response: All ditch grades have been adjusted to minimum of 1%.

iii. Erosion matting in the ditches is required.

Response: Shear stress calculations were completed for each of the 4 major channels. Based on the shear stress results, a Class II, Type B matting will be adequate for each channel. A list of allowable ECRM has been added to the SWR and callouts for the ditch lines have been added to the site plan sheet C1.8.

iv. Maintenance of ditches may be an issue. Please provide snow storage locations on the plans. Snow storage should not be in a location that

compromises the drainage plan. (As an example, refer to the NE corner of the parking lot in sub-basin 3.)

Response: A snow pile exhibit has been added to the plan set. See sheet X1.2.

v. **The northern pond will discharge through the ditches rather than over the designed emergency spillway. This should be corrected.**

Response: The site grading plan has been revised so that all areas along the top of ditch berm are at or higher than the emergency spillway. This shall ensure water reaches and flows through the emergency spill way before backing up and overtopping the ditch berm.

vi. **The western pond may not have enough freeboard from the top of berm to the 100-year elevation. This may also create a problem in the ditches just to the north of the proposed pond.**

Response: The western pond berm has been raised 6" to elevation 777.50'. The emergency spillway elevation has been set to elevation 777.00'. The 100 year 24 hour storm flow depth is determined to be elevation 776.41'.

This satisfies the WisDNR criteria stated in conservative practice standard 1001 "ensure top of embankment, after settling, is a minimum 1 vertical foot above the flow depth for the 100 year 24 hour storm event."

This also satisfies Village of Germantown's Stormwater Management Requirements of aligning the emergency spillway elevation 6" above the 100 year storm elevation.

h. Provide inlet capacity calculations.

Response: Inlet capacity calculations have been added to the SWR.

i. Provide storm sewer calculations.

Response: Storm sewer calculations have been added to the SWR.

j. 100-year overland flow routes are to be identified on the plans.

Response: Storm Water Management Exhibit in the SWR now shows the overland flow routes.

k. For the tracking pad utilize WisDNR Trackout Control Practices Technical Standard 1057.

Response: The construction entrances have been noted, and the WisDNR Trackout Control Practices Technical Standard 1057 will be noted and detailed on the final site construction plans.

l. Follow WisDNR Wet Detention Pond Technical Standard 1001 to determine if the proposed ponds require liners.

Response: Pond liner requirements will be re-evaluated pending site geotechnical investigation. The existing site contains a stormwater retention pond that is currently not lined, so it is anticipated that clay rich, low permeable soils, will be present in the immediate pond locations or readily available on site.

m. The outlet structures are to have anti-seep collars.

Response: 4'x4' anti-seep collars have been added to the outlet pipe details in the SWR. To be spaced a minimum of every 20'.

n. A detailed erosion control plan is required. The current plan does not provide construction sequencing or level of detail necessary to prevent erosion from leaving the site.

Response: Construction sequencing has been added as an exhibit. Please see sheets X2.0 – X2.4.

o. Construction sequencing should address the removal of the easterly construction entrance.

Response: Construction sequencing has been added as an exhibit. Please see sheets X2.0 – X2.4.

p. A pond maintenance agreement must be submitted and approved prior to occupancy.

Response: A pond maintenance agreement will be completed by Waste Management prior to site construction permits.

q. Remove the "Additional Parking Area" on sheet C1.3 or account for the additional impervious area in the Storm Water Management Plan.

Response: The additional parking area has been removed from the site plan.

r. On sheet C1.10 details of light-duty and heavy-duty asphalt are to be provided.

Response: Detail sections have been added to the hard surface plan. Note these are subject to change pending site geotechnical investigation. See sheet, C1.10

h. On sheet A1.0 the women's locker room is to have an additional partition or doorway between the entrance and the locker room area.

Response: An additional door has been added to the floor plan. See sheet A1.1.

Note re 2/11/2019 Plan Commission Discussion

At the Plan Commission meeting February 11th, there was a discussion regarding whether compressed natural gas used on the property will contain an odorant. Since then, we have verified that the gas does in fact contain the same odorant found in gas supplied to homes and other businesses. We apologize for any confusion.

Attachments: Corrected Table 1

Diversified Engineering Inc.
CONSULTING ENGINEERS & SURVEYORS

	a.m. employee arrivals and p.m. departures	a.m. facility departures		p.m. facility returns	
				Return from east	**Return from north**
Truck	none	100% via east drive	About 60% turn east on Hwy. Q. Of those, roughly 30% continue east on Hwy. Q, 10% turn north on Wausaukee Rd., and 60% turn south on Boundary Rd. About 40% turn west on Hwy. Q Of those, roughly 25% continue west on Hwy. Q, 25% turn north on Hwy. 145, and 50% turn south on Hwy. 145	60% originating from landfill (Boundary Rd. to Hwy. Q to base). Almost all will use west driveway.	40% originating from Grant Drive recycling facility (of which approximately half will approach from Hwy. 145 and half from Wausakee Rd.) Almost all will use west driveway.
Vehicle	Roughly half of employees will arrive and depart to work from the east and half from the west. All will use the west driveway.				

175 Ray Ave. N.E. New Philadelphia, OH 44663 - Phone: 330-364-1631 - Fax: 330-364-4031 - Email: dei@div-eng.com

PLANS FOR:

WASTE MANAGEMENT TRUCK MAINTENANCE FACILITY

N96 W13840 COUNTY LINE RD.
GERMANTOWN, WI 53022

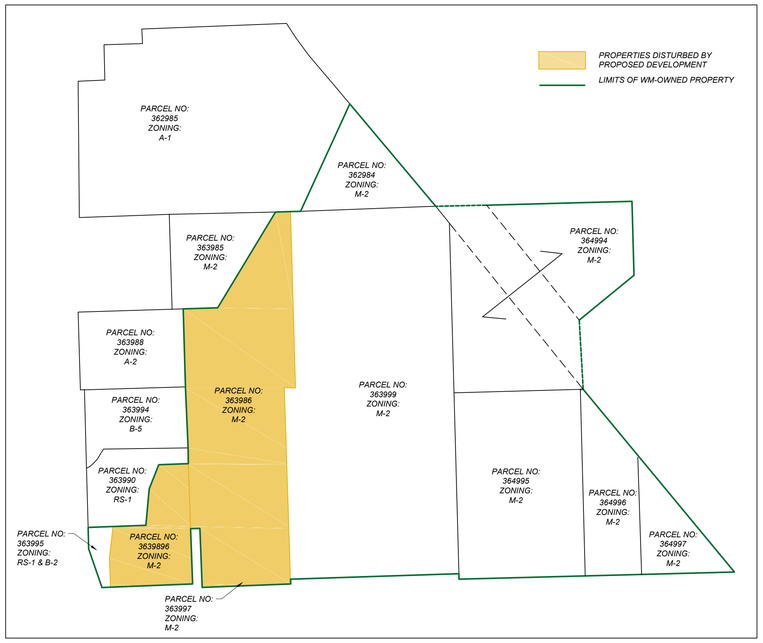

ADJACENT PROPERTY ZONING MAP:
SCALE: 1" = 500'

SITE MAP
SCALE: 1" = 200'

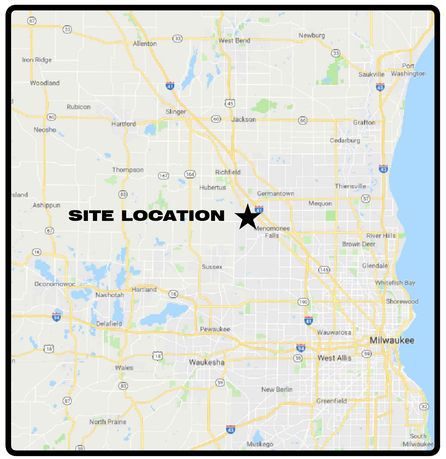

DRAWING INDEX:

GENERAL		**LANDSCAPING**	
G1.0	COVER	L1.0	SITE LANDSCAPING PLAN
CIVIL		**EXHIBITS**	
C1.0	SYMBOLS LEGEND & GENERAL NOTES	X1.0	SITE PHOTOMETRIC PLAN
C1.1	EXISTING CONDITIONS PLAN	X1.1	SITE FENCING EXHIBIT
C1.2	SITE DEMOLITION PLAN	X1.2	SITE SNOW REMOVAL EXHIBIT
C1.3	SITE ZONING MAP	X2.0	EROSION CONTROL PLAN - PHASE I
C1.4	SITE IMPROVEMENT PLAN	X2.1	EROSION CONTROL PLAN - PHASE II
C1.5	ENLARGED SITE IMPROVEMENT PLAN	X2.2	EROSION CONTROL PLAN - PHASE III
C1.6	SITE GRADING PLAN	X2.3	EROSION CONTROL PLAN - PHASE IV
C1.7	ENLARGED SITE GRADING PLAN	X2.4	EROSION CONTROL PLAN - PHASE V
C1.8	STORM WATER MANAGEMENT PLAN		
C1.9	SITE UTILITY PLAN	**ARCITECTUAL**	
C1.10	HARD SURFACE KEY PLAN	A1.0	EXTERIOR ELEVATIONS
		A1.1	FLOOR PLANS
		A1.2	CNG TRUSS STRUCTURE TYPICAL DETAIL

PROJECT CONTACTS:

CIVIL ENGINEER:

DIVERSIFIED ENGINEERING INC.
NICK BERNER, P.E.
175 RAY AVE NE
NEW PHILADELPHIA, OH 44663
PHONE: (330) 364-1631
EMAIL: nberner@div-eng.com

OWNER:

WASTE MANAGEMENT OF WISCONSIN, INC.
DONALD SMITH, P.E.
PO BOX 1450
CHICAGO, IL 60690-1450
PHONE: (262) 806-6039
EMAIL: dasmith@wm.com

SITE INFORMATION:

PARCEL NO 1:		**PARCEL NO. 2:**		**FEMA:**	
TAX KEY	GTNV_363996	TAX KEY	GTNV_363986	COMMUNITY NUMBER:	550472
ZONING	M2	ZONING	M2	PANEL #:	0379
TOTAL ACREAGE	8.15 AC.	TOTAL ACREAGE	35.63 AC.	SUFFIX:	D
				DATE OF FIRM:	11/20/2013
				FIRM ZONE:	A
				BFE:	769 FT.

BENCHMARKS:

WASHINGTON COUNTY BENCH MARK NO.	102
DATUM:	NATIONAL GEODETIC VERTICAL DATUM OF 1929
ELEVATION:	766.809
DETAILED DESCRIPTION:	BENCHMARK 102 IS A CHISELED SQUARE SET IN THE TOP OF THE EASTERLY 60-INCH-DIAMETER CONCRETE CULVERT PIPE

LEGAL DESCRIPTION:

PARCEL NO. 1: (363996)
LOT 2 - CSM4247 V28 P30 PT OF SW SW V1013 P676 SEC 36-9-20 8.15 AC.

PARCEL NO. 2: (363986)
PT NW SW V747 P284 EXC PT SOLD SEC 36-9-20

NOTE: LOTS TO BE COMBINED PRIOR TO PERMIT.

ISSUED FOR REVIEW 03/01/2019

ABBREVIATIONS

R/W	- Right-of-Way
P/L	- Adjoiner Property Line
℄	- Centerline
P.O.B.	- Place/Point of Beginning
P.O.C.	- Place/Point of Commencement
Rad	- Radius
Arc	- Arc Length
Δ	- Delta Angle
ChL	- Chord Length
ChB	- Chord Bearing
Calc.	- Calculated
Msd.	- Measured
Dd.	- Deed
(Record)	- Actual
N.R.D.	- No Recorded Distance
F.F.E.	- Finished Floor Elevation
CMP	- Corrugated Metal Pipe
DI	- Ductile Iron
HDPE	- High Density Polyethylene
PVC	- Polyvinyl Chloride
RCP	- Reinforced Concrete Pipe
VCP	- Vitrified Clay Pipe

LINEWORK

	- Guardrail
x	- Fence (As Noted)
	- Wood Fence (As Noted)
	- Steel Fence (As Noted)
san	- Sanitary Sewer
stm	- Storm Sewer
w	- Water Line
g	- Underground Gas Pipeline
e	- Underground Electric
ll	- Underground Lighting
t	- Underground Telephone
c	- Underground Cable T.V.
fo	- Underground Fiberoptics
ou	- Overhead Utilities
ft	- Field Tile
	- Gravel Area
	- Concrete Area
	- No Parking Area
	- Building Area
	- 1' Elevation Contour
	- 5' Elevation Contour

STANDARD/ROADWAY

	- Iron Pin Set
	- Drill Hole or Railroad Spike Set
	- Iron Pin Found
	- Iron Pipe Found
	- Monument Found as Noted
	- Stone Monument Found
	- Monument Box
	- Sign
AC	- Air Condition Unit
MW	- Monitoring Well
	- Bollard Post
	- Parking Meter
AP	- Air Pump
	- Bollard Light / Ground Light
G	- Grease Trap
	- Ground Light
MB	- Mail Box
	- Basketball Hoop
KP	- Gate Entry Key Pad
	- Flag Pole
X	- Interstate Highway
X	- United States Highway
X	- State Highway
X	- County Highway
	- Autumn Blaze Red Maple
	- Moonglow Juniper
	- Endless Summer Hydrangeas
	- Pasture Rose

UTILITIES

MH	- Manhole
SV	- Storm Manhole
	- Curb Inlet Basin w/ Grate
	- Catch Basin
SV	- Storm Vault
CO	- Cleanout
SS	- Sanitary Manhole
SV	- Sanitary Vault
	- Water Stand Pipe
	- Fire Hydrant
	- Post Indicator Valve
	- Water Valve
	- Water Meter
W	- Water Manhole
	- Water Backflow Preventer
	- Water Vault
	- Water Curb Box
	- Gas Meter
	- Gas Valve
	- Gas Curb Box
Fo	- Fiberoptic Manhole
	- Cable T.V. Pedestal
	- Electric Meter
	- Electric Transformer
E	- Electric Manhole
E	- Electric Vault
	- Telephone Pedestal
T	- Telephone Manhole
P	- Telephone Booth
T	- Telephone Vault
TSV	- Traffic Vault
P	- Signal Pull Box
	- Power Pole
	- Traffic Pole
	- Telephone Pole
	- Flag Pole
	- Light Pole
	- Guy Wire
UV	- Utility Vault
	- Underground Utility Marker
V	- Vacuum
	- Unknown Valve

ALTA/MISC

A	- Encroachment
X	- Easement Circle
XA	- Easement Alt. 1
T-X X	- Easement Alt. 1
X	- Label 1
X	- Label 2
REG	- Regular Parking Count
HC	- Handicap Parking Count
	- Handicap Space

GENERAL PLAN NOTES:

1. All necessary preventative measures will be taken to keep damage from occurring to adjacent structures such as utilities, tree, poles, structures, and private property during the progress of this work. Any and all damages that occur due to construction activities shall be repaired or replaced by the contractor at no expense to the owner.

2. All material excavated or used in the laying of the pipe will be located and stockpiled in a way not to endanger the public, the personnel on the job, or block natural drainage patterns.

3. DEWATERING:
Contractor is responsible for any and all necessary dewatering activities for any excavation.

4. ROOF DRAIN NOTE:
Roof drains, foundation drains, and other clean water connections to sanitary sewer system are strictly prohibited.

5. NOTIFICATION:
Any time utilities are involved, other than city water and sewer, notify Wisconsin One Call at 1-800-242-8511 three (3) working days prior to excavation.

6. EROSION CONTROL:
Contractor to allow no silt or erosion to enter existing/proposed storm sewer system or water courses during construction phase. Contractor shall use erosion control measures such as inlet filters and ditch check dams in accordance with Wisconsin D.O.T. Specifications.

7. All grass areas to be disturbed shall have topsoil removed and stockpiled prior to excavation. Upon completion of construction, a 6" minimum of topsoil shall be replaced, then seeded and mulched (in accordance with the Wisconsin D.O.T. Specifications). All disturbed areas are to be graded to have positive drainage.

8. Underground utilities were plotted from records and field observations and actual locations may deviate from the plans. Contractor shall be responsible for verifying location of all underground utilities within the project area.

9. Contractor shall exercise caution within and adjacent to his work areas so as not to damage existing facilities. Any facilities that are damaged due to the contractors operations shall be repaired or replaced by the contractor to original or better condition at no expense to the owner.

11. TRACKING OF MUD UPON PUBLIC WAYS
It shall be the duty of the contractor to supervise the handling of all traffic entering and leaving the work area to prevent mud or debris of any nature from being tracked onto the sidewalks and streets of the city.

12. MATERIAL DISPOSAL
The contractor shall not dump any waste materials on the Owner's property without the written permission of the Owner, or another property without the written permission of the owner or lessor thereof. When such permission is granted, dumping shall be subject to regulations prescribed by the Engineer.

13. PROTECTION OF TREES
All trees within the construction area not specified for removal are to be protected by the contractor. Care shall be taken to insure the the roots are not cut. The contractor shall be responsible for replacing any damaged trees of the same size and kind as damaged. Damaged tree branches shall be properly trimmed immediately after damage.

14. CONCRETE PROTECTIONS
The contractor shall protect the finish of all freshly placed concrete from vandalism until the concrete has taken its initial set. The contractor shall be responsible for any damage to the concrete finish caused by vandals due to his failure to protect the concrete.

MAINTENANCE OF TRAFFIC:

1. Contractor shall submit a maintenance of traffic plan to Waste Management, Maintenance Supervisor and Diversified Engineering for review and approval 15 days prior to start of work.

2. Contractors maintenance of traffic plan shall be in accordance with Wisconsin D.O.T. Specifications.

3. The contractor shall furnish and maintain all necessary safeguards such as barricades, satisfactory barriers, lighting, flaggers, and such other traffic control devices as provided in Wisconsin D.O.T. Specifications.

4. All construction traffic control signs used for the project shall conform to the current "Manual of Uniform Traffic Control Devices" and shall be provided, erected, and maintained by the contractor.

CALL BEFORE YOU DIG !

WISCONSIN LAW REQUIRES EXCAVATORS TO NOTIFY THE PROTECTION SERVICE AT LEAST THREE (3) BUSINESS DAYS BUT NOT MORE THAN TEN (10) CALENDAR DAYS PRIOR TO EXCAVATION

Wisconsin One Call Notification Center

www.diggershotline.com

811 or 1-800-242-8511

ISSUE DATE 03/01/2019 SCALE NO SCALE CTR INT. ---
SURVEYED BY COM CHECKED BY KJB
DRAWN BY DSW APPROVED BY MJB

REV	DATE	DESCRIPTION	DWN BY	DES BY	CHK BY	APP BY

Diversified Engineering Inc.
CONSULTING ENGINEERS & SURVEYORS
179 RAY AVENUE, N.E.
NEW PHILADELPHIA, OH 44663
Phone: (330) 364-6531
Fax: (330) 364-6751
e-mail: jim@de-eng.com
Web: www.de-eng.com

WASTE MANAGEMENT

PROJECT: TRUCK MAINTENANCE FACILITY
GERMANTOWN, WI

SHEET TITLE: SYMBOLS LEGEND & GENERAL NOTES

SHEET NO: C1.0

JOB NO: ENG-1465

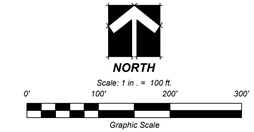

EXISTING CONDITIONS PLAN

Scale: 1" = 100'

BOUNDARY NOTES:

- *Waste Management Parcels 363995, 363996, 363997, 363986 and the existing ~0.58ac. parcel "Public Right of Way" off of County Line Rd. to be combined to one contiguous parcel at a later date.*

GENERAL NOTES:

A. *All existing utilities are shown herein as reference only and are based on record of the various utility companies and a field survey. Contractor is responsible for determining the exact locations of all utilities prior to any construction activities.*

B. *All existing conditions, topography, utilities, and property information are taken from a survey of land situated in the Village of Germantown, State of Wisconsin, by surveyors: Construction Quality Management, Inc., 2679 Continental Drive, Green Bay, WI. 54311. ph: (920) 465-3911, fx: (920) 465-3913 and Diversified Engineering, Inc., 175 Ray Avenue, NE, New Philadelphia, OH. 44663. ph: (330) 364-1631, fx: (330) 364-4031.*

ISSUE DATE	03/01/2019	SCALE	1" = 100'	CTR INT.	2'
SURVEYED BY		CQM		CHECKED BY	KJB
DRAWN BY		DSW		APPROVED BY	MJB

REV	DATE	DESCRIPTION	DWN BY	DES BY	CHK BY	APP BY

Diversified Engineering Inc.
CONSULTING ENGINEERS & SURVEYORS
175 RAY AVENUE, N.E.
NEW PHILADELPHIA, OH 44663
Phone: (330) 364-1631
Fax: (330) 364-4031
e-mail: dei@dei-eng.com
Web: www.dei-eng.com

PROJECT: **WASTE MANAGEMENT**

TRUCK MAINTENANCE FACILITY
GERMANTOWN, WI

SHEET TITLE: EXISTING CONDITIONS PLAN

SHEET NO: **C1.1**

JOB NO: ENG-1465

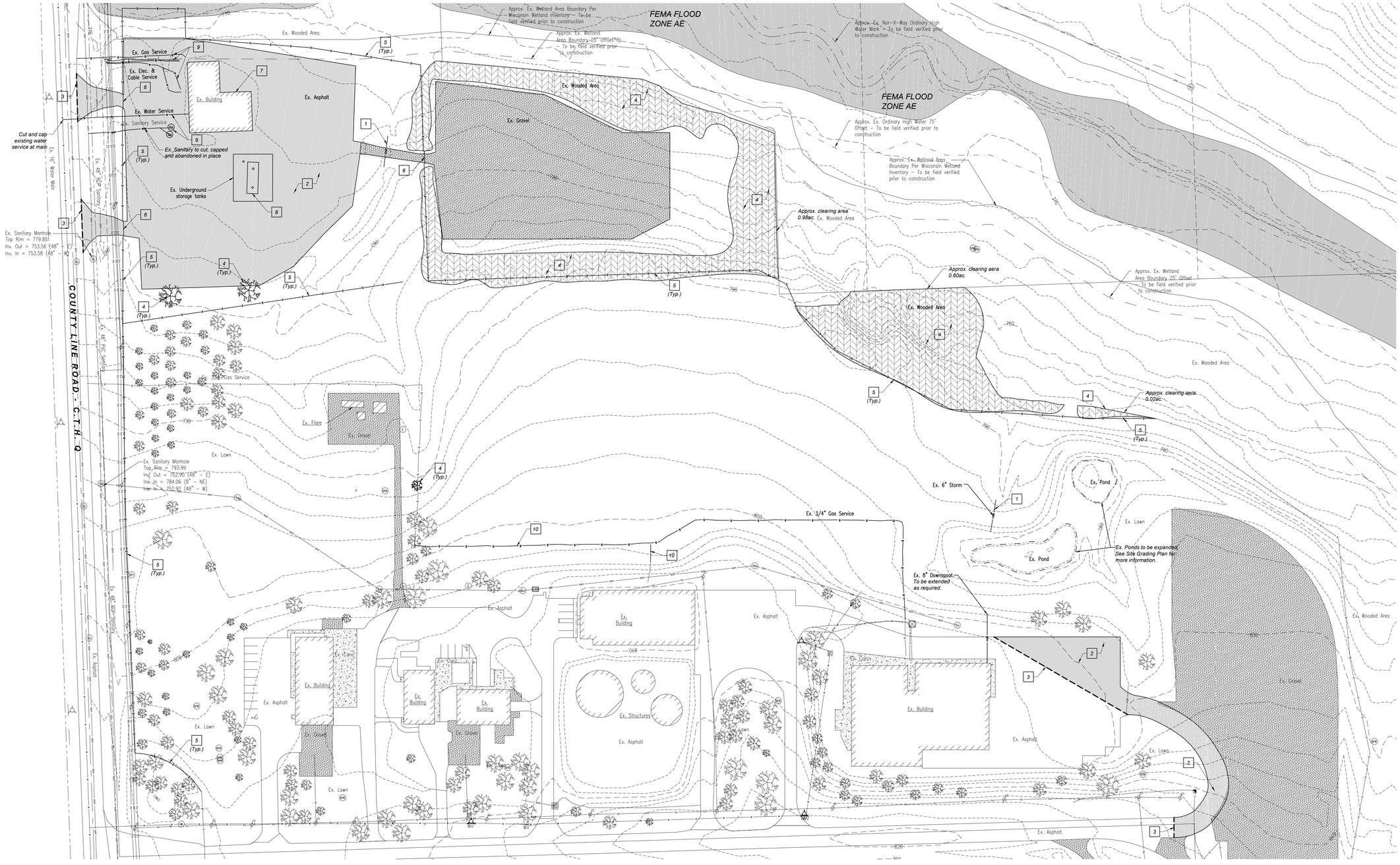

SITE DEMOLITION PLAN

Scale: 1" = 60'

NORTH

Scale: 1 in . = 60 ft.

0' 60' 120' 180'

Graphic Scale

LEGEND:

- Existing Asphalt to be Removed
- Existing Wooded area to be cleared
- Proposed Full-depth Saw Cut Line

KEYED NOTES:

1.) Remove storm water pipe. Demolition debris shall be hauled off-site.

2.) Remove asphalt pavement section and base material. Demolition debris shall be hauled off-site.

3.) Full depth asphalt saw cut line.

4.) Clear, grub and completely remove stump.

5.) Remove fence and appurtenances. Demolition debris shall be hauled off-site.

6.) Remove gate and appurtenances. Coordinate any electrical disconnection with Electrical Contractor. Demolition debris shall be hauled off-site.

7.) Remove building. Coordinate any utility disconnection with associated trade. Demolition debris shall be hauled off-site.

8.) Remove underground storage tanks. Coordinate any utility disconnection with associated trade. Demolition debris shall be hauled off-site.

9.) Existing building utility services to be cut, capped and abandoned in place. Demolition debris shall be hauled off-site.

10.) Relocate 3/4" gas service to location show in drawings.

GENERAL NOTES:

A. At start of project and prior to demolition of existing conditions, contractor shall be in contact with adjacent property owners, city representative, and site representative to coordinate demolition timing.

B. Contractor to remove and dispose of all debris and other materials resulting from demolition and construction operations, disposal will be in accordance with all local, state, and federal regulations governing such operations.

C. Contractor shall take all precautions necessary to avoid damage to adjacent properties during construction phases of this project. Contractor will be solely responsible for damage to neighboring properties occurring as a result of construction activities.

D. All existing utilities are shown herein as reference only and are based on record of the various utility companies. Contractor is responsible for determining the exact locations and depths of all utilities prior to demolition activities.

E. Contractor shall provide traffic control in accordance with the state manual on uniform traffic control devices.

F. Prior to starting demolition, it is the responsibility of the contractor to obtain all permits, tap fees, bond fees, and inspection fees required by local and state governmental agencies.

G. All landfill tipping fees shall be paid by the Contractor.

H. Utilities shall be removed and the trenches backfilled with approved backfill material. Backfill material shall be placed in maximum eight inch lifts and compacted in accordance with the geotechnical report or to a minimum of 95% of the maximum dry density as determined by ASTM D-1557 modified proctor method +/- 3% optimum moisture content.

I. Contractor shall not burn debris or use explosives.

J. Contractor shall be responsible for all phasing of demolition when the demolition may impact traffic, access, or utilities to neighbors or facilities to remain and other surrounding infrastructure or facilities.

K. Conduct demolition operations to ensure minimal interference with roads, sidewalks, and any other adjacent occupied facilities.

L. Do not close or obstruct roads, sidewalks, or any other occupied facilities without permission from the local authority having jurisdiction and/or property owners.

M. The contractor shall be responsible for ensuring the construction site and surrounding areas are free of accumulated debris.

REV	DATE	DESCRIPTION	DWN BY	DES BY	CHK BY	APP BY

ISSUE DATE 03/07/2019 SCALE 1" = 60' CTR INT. 2"
SURVEYED BY COM CHECKED BY KJB
DRAWN BY ESW APPROVED BY MJB

Diversified Engineering Inc.
CONSULTING ENGINEERS & SURVEYORS
175 RAY AVENUE, N.E.
NEW PHILADELPHIA, OH 44663
Phone: (330) 364-6531
Fax: (330) 364-6531
e-mail: dei@dei-eng.com
Web: www.dei-eng.com

WASTE MANAGEMENT

PROJECT: TRUCK MAINTENANCE FACILITY GERMANTOWN, WI

SHEET TITLE: SITE DEMOLITION PLAN

SHEET NO: C1.2

JOB NO: ENG-1465

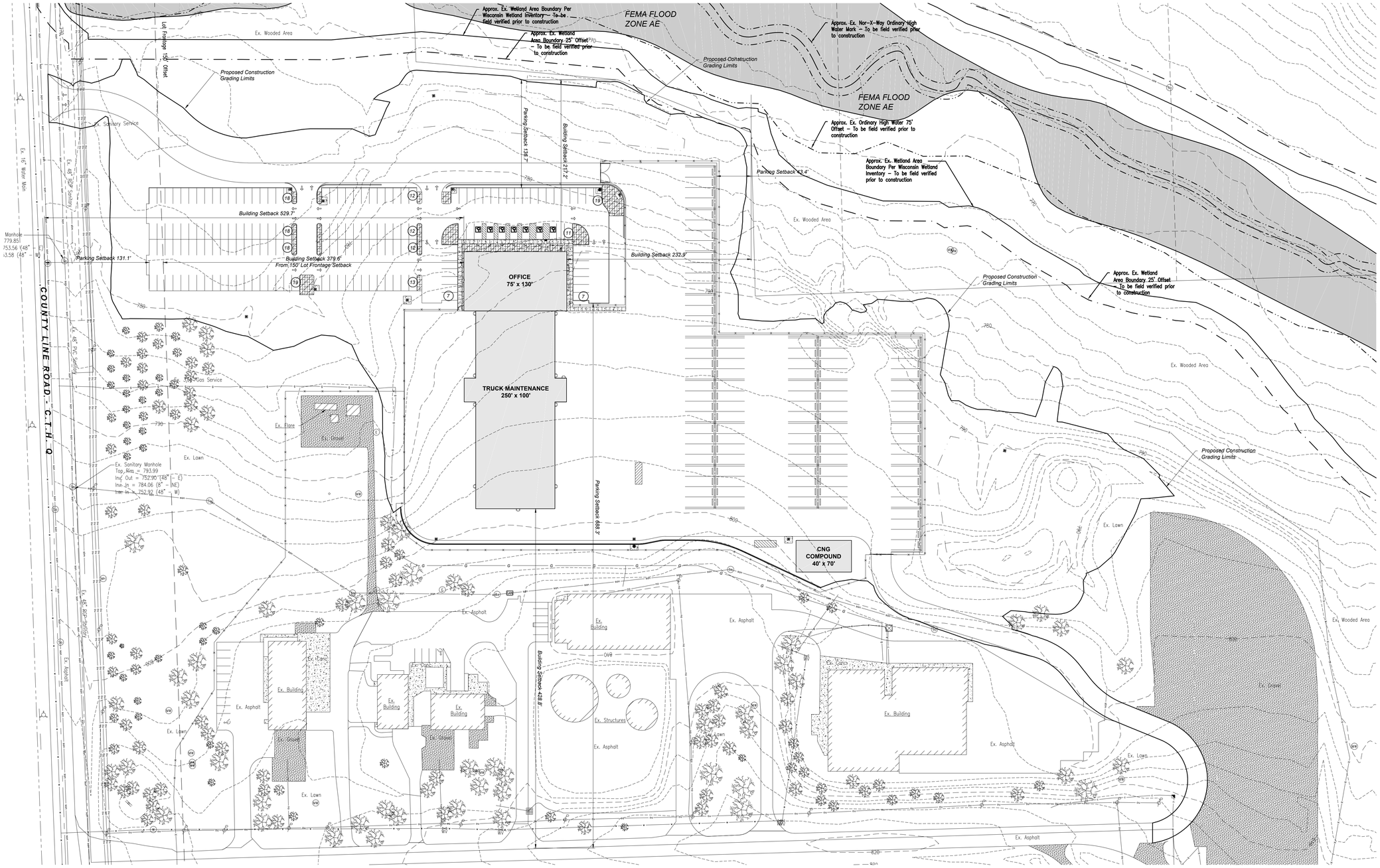

SITE DEMOLITION PLAN

Scale: 1" = 60'

NORTH

Scale: 1 in. = 60 ft.

0' 60' 120' 180'

Graphic Scale

LEGEND:

- (8) Proposed Parking Space Count Indicator
- Proposed Construction Grading Limits
- *Approximate Wetland Boundary per WisDNR
- *Approximate Wetland Boundary 25' Offset
- *Approximate Nor-X-Way Centerline
- *Approximate Nor-X-Way Ordinary High Water Mark
- *Approximate Nor-X-Way Ordinary High Water Mark 75' offset
- FEMA Flood Zone AE - Map Number 55131C0379D
- Proposed Landscaping Area, See Site Landscaping Plan for further coordination

* - Boundary & offset to be field verified prior to construction

LOT COVERAGE NOTES:

Lot square footage total:	2,005,005 S.F.
Impervious surface percentage:	25.7%
Green space percentage:	74.3%
Percent permitted (over/under):	under 48.6%

*NOTE: Proposed Coverage includes existing development on the parcel where applicable.

PARKING BREAKDOWN

Total Parking Spaces (Public)	= 159
Total Parking Spaces (Handicap)	= 7

Typical Parking Space Dimension: 10' x 20' (Unless otherwise noted)

SETBACK NOTES:

Required Front yard Setback:	30'
Required Side yard Setback:	25'
Required Rear yard Setback:	25'
Required Lot Frontage Setback:	150'

PARKING CALCULATIONS:

- Professional Office Space:
  - Office Area: 9,750 S.F.
  - Office Employees: 128 Persons

Required parking one space per 200 S.F. + 1/2 space per employee
- 9,750 S.F. / 200 S.F. = 49 Spaces
- 128 Persons / 2 = 64 Spaces

- Total Required Office Spaces = 113 Spaces

- Auto Repair Space:
  - Auto Repair Area: 19,500 S.F.
  - Auto Repair Employees: 16 Persons

Required parking one space per 250 S.F. + 1 space per employee
- 19,500 S.F. / 250 S.F. = 78 Spaces
- 16 Persons = 16 Spaces

- Total Required Auto Repair Spaces = 94 Spaces

Required Spaces:
Total required spaces = 207 Spaces per code

Provided Spaces:
159 Standard Spaces
7 Accessible Spaces
166 Total Spaces Provided

*NOTE: Additional parking area if required for future tenant = 44 spaces. bringing total available spaces to 210 parking spaces, meeting required parking spaces per code.

REV	DATE	DESCRIPTION	DWN BY	DES BY	CHK BY	APP BY

ISSUE DATE: 03/01/2019 SCALE: 1" = 60' CTR INT.: 2'
SURVEYED BY: CGM CHECKED BY: KJB
DRAWN BY: DSW APPROVED BY: MJB

Diversified Engineering Inc.
CONSULTING ENGINEERS & SURVEYORS
275 RAY AVENUE, N.E.
NEW PHILADELPHIA, OH 44663
Phone: (330) 364-5531
Fax: (330) 364-5531
e-mail: diesl@de-eng.com
Web: www.de-eng.com

PROJECT: WASTE MANAGEMENT
TRUCK MAINTENANCE FACILITY
GERMANTOWN, WI

SHEET TITLE: SITE ZONING MAP

SHEET NO: C1.3

JOB NO: ENG-1465

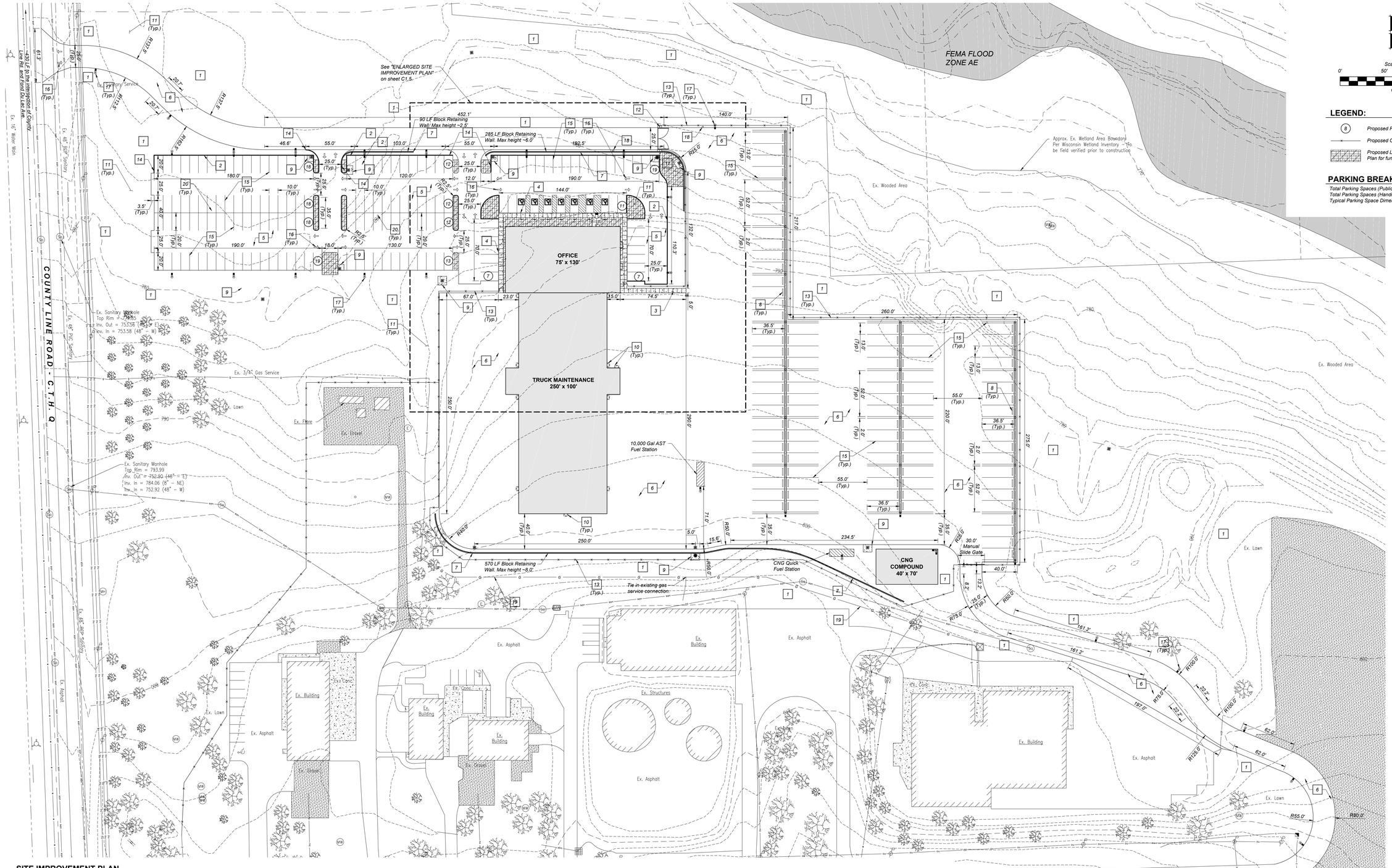

SITE IMPROVEMENT PLAN

Scale: 1" = 50'

KEYED NOTES:

1.) Grass area (slope to drain). Re-seed existing lawn where disturbed by new construction and construction activities.

2.) 6" concrete curb.

3.) 4" concrete sidewalk.

4.) Integral concrete curb and walk.

5.) Proposed light-duty asphalt pavement.

6.) Proposed heavy-duty concrete pavement.

7.) Block Retaining Wall.

8.) Concrete truck wheel stop.

9.) Reinforced Concrete Apron.

10.) Frost footing at man doors.

11.) Proposed Landscaping: (Shown for reference). See Sheet L1.0 "Site Landscaping Plan".

12.) Swing Gate Operator & Concrete Pad provided & installed by G.C., equal to "LiftMaster Elite Series" Model CSW24U, 120V (Conduits & Wire by E.C.).

13.) 6' high chain link security fence / access gate.

14.) Taper curb.

15.) Pavement painting: 4" wide yellow striping.

16.) Pavement marking: Yellow directional arrow.

17.) Proposed site lighting: By E.C. (shown for reference). See site electrical plan.

18.) Pedestal for gate operator access control key pad, furnished and installed by G.C. Conduit to pedestal by E.C., wiring by Access Control installer.

19.) Proposed relocated 3/4" gas service line location.

20.) Concrete parking bumper.

*NOTE: See "SITE PLAN REVIEW SUBMITTAL PACKET" for typical construction details.

GENERAL NOTES:

A. Provide smooth transition from newly paved areas to existing paved area as necessary. The existing edge of pavement shall be free of all loose debris at all areas where proposed pavement meets existing pavement. The edge of existing asphalt pavement shall be properly sealed with a tack coat material in all areas where new asphalt pavement is indicated to join existing.

B. Contractor is responsible for locating and verifying all existing underground utilities prior to construction, and is responsible for any damage to them during construction.

C. All dimensions to face of curb or edge of concrete unless otherwise noted.

D. All pavement markings depicting parking spaces, accessible parking spaces, access aisles and no parking signage shall be applied with mechanical equipment and templates at the locations and lengths shown on the plans (two coats all locations). Paint shall be yellow in color (unless otherwise specified) and shall meet all applicable requirements of state department of highway specifications, unless otherwise specified.

E. Contractor shall be solely responsible for and take all precautions necessary to avoid damage to adjacent properties during the construction phases of this project.

F. All construction methods and materials must conform to current standards and specifications of the federal, state, county, city or local requirements, whichever has jurisdiction.

G. All excavated and/or disturbed areas indicated as "grass area" (per keyed note #1), are to be seeded with a locally adaptive turf seed mix after finish grading unless otherwise noted. All newly seeded areas shall have a minimum of 6" of topsoil. Hold soil down 1" from pavement elevation. Contractor to supply straw mulch where grass seed has been planted.

H. All radii indicated on plans shall be constructed as circular.

I. Resurface or reconstruct at least to original conditions all areas where traffic by contractors, subcontractors or suppliers have damaged existing pavement, lawns or other improvements during construction, after construction work is complete.

J. The contractor shall verify all dimensions and elevations in the field prior to the start of construction. The contractor shall be responsible for all field dimensions and elevations during the entire construction schedule. If any discrepancies are found in these plans from actual field dimensions, the contractor shall contact the engineer immediately.

REV	DATE	DESCRIPTION	DWN BY	DES BY	CHK BY	APP BY

ISSUE DATE: 03/01/2019 SCALE: 1" = 50' CTR INT.: 2'
SURVEYED BY: COM CHECKED BY: KJB
DRAWN BY: DSW APPROVED BY: MJB

Diversified Engineering Inc.
CONSULTING ENGINEERS & SURVEYORS
175 RAY AVENUE, N.E.
NEW PHILADELPHIA, OH 44663
Phone: (330) 364-5531
Fax: (330) 343-4253
e-mail: dei@dei-eng.com
Web: www.dei-eng.com

WASTE MANAGEMENT

PROJECT: TRUCK MAINTENANCE FACILITY
GERMANTOWN, WI

SHEET TITLE: SITE IMPROVEMENT PLAN

SHEET NO: C1.4

JOB NO: ENG-1465

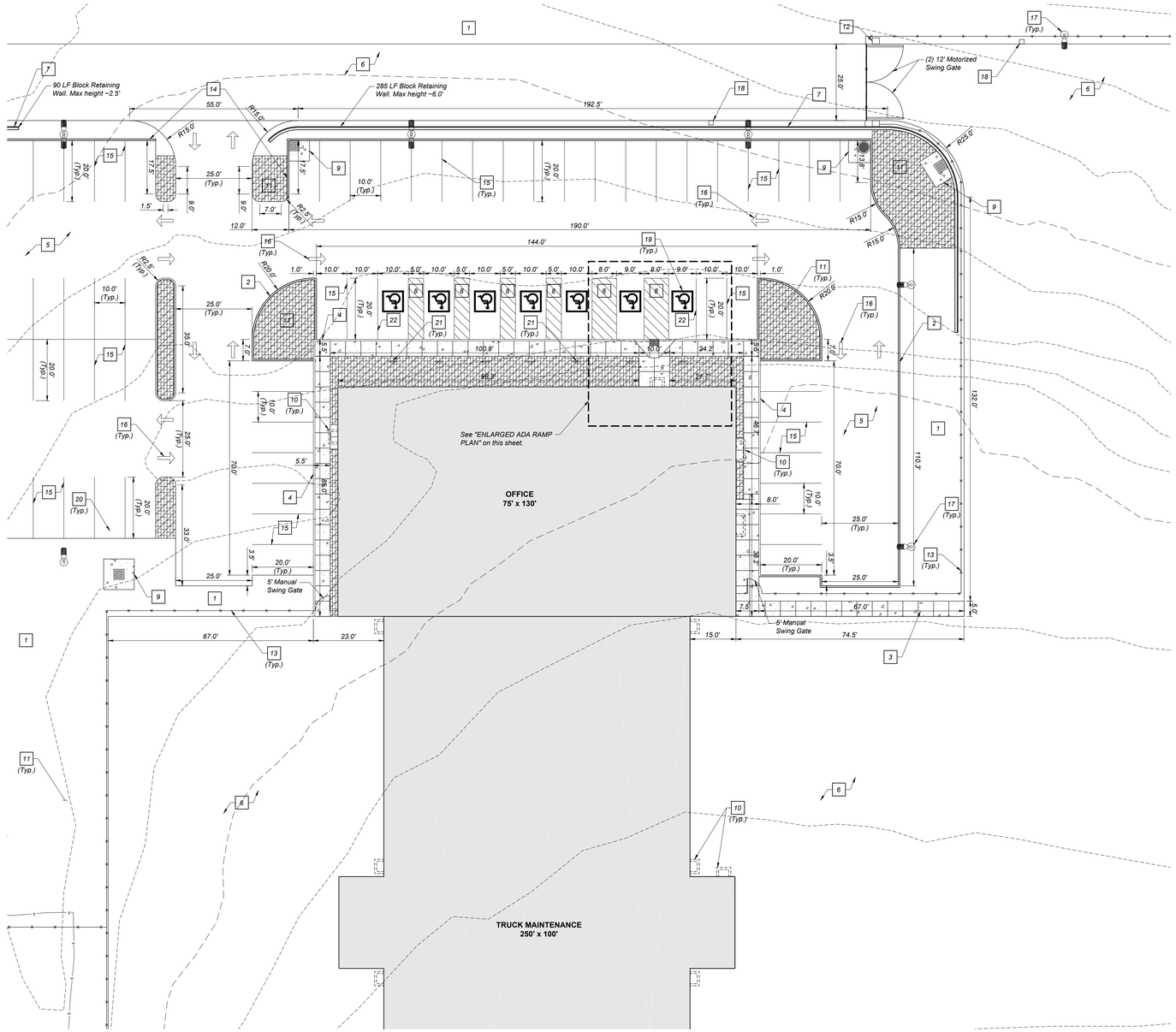

ENLARGED SITE IMPROVEMENT PLAN

Scale: 1" = 20'

KEYED NOTES:

1.) Grass area (slope to drain). Re-seed existing lawn where disturbed by new construction and construction activities.

2.) 6" concrete curb.

3.) 4" concrete sidewalk.

4.) Integral concrete curb and walk.

5.) Proposed light-duty asphalt pavement.

6.) Proposed heavy-duty concrete pavement.

7.) Block Retaining Wall.

8.) Accessible parking design to meet all governing codes. Quantity as required by I.A.C. & A.D.A. - accessible parking spaces and their access aisles shall be 1:20 running-slope and 1:48 cross-slope. Accessible route delineation shall be 4" wide blue outline w/ 4" blue cross hatching.

9.) Reinforced Concrete Apron.

10.) Frost footing at man doors.

11.) Proposed Landscaping: (Shown for reference). See Sheet L1.0 "Site Landscaping Plan".

12.) Swing Gate Operator & Concrete Pad provided & installed by G.C., equal to "LiftMaster Elite Series" Model CSW24U, 120V (Conduits & Wire by E.C.).

13.) 6' high chain link security fence / access gate.

14.) Taper curb.

15.) Pavement painting: 4" wide yellow striping.

16.) Pavement marking: Yellow directional arrow.

17.) Proposed site lighting: By E.C. (shown for reference). See site electrical plan.

18.) Pedestal for gate operator access control key pad, furnished and installed by G.C. Conduit to pedestal by E.C., wiring by Access Control installer.

19.) Pavement painting: "Universal Symbol", blue painted field w/ white painted wheelchair and border.

20.) Concrete parking bumper.

21.) Accessible parking sign (post-mounted).

22.) Pavement painting: 4" wide blue paint striping at accessible parking space.

*NOTE: See "SITE PLAN REVIEW SUBMITTAL PACKET" for typical construction details.

GENERAL NOTES:

A. Provide smooth transition from newly paved areas to existing paved area as necessary. The existing edge of pavement shall be free of all loose debris at all areas where proposed pavement meets existing pavement. The edge of existing asphalt pavement shall be properly sealed with a tack coat material in all areas where new asphalt pavement is indicated to join existing.

B. Contractor is responsible for locating and verifying all existing underground utilities prior to construction, and is responsible for any damage to them during construction.

C. All dimensions to face of curb or edge of concrete unless otherwise noted.

D. All pavement markings depicting parking spaces, accessible parking spaces, access aisles and no parking signage shall be applied with mechanical equipment and templates at the locations and lengths shown on the plans (two coats all locations). Paint shall be yellow in color (unless otherwise specified) and shall meet all applicable requirements of state department of highway specifications, unless otherwise specified.

E. Contractor shall be solely responsible for and take all precautions necessary to avoid damage to adjacent properties during the construction phases of this project.

F. All construction methods and materials must conform to current standards and specifications of the federal, state, county, city or local requirements, whichever has jurisdiction.

G. All excavated and/or disturbed areas indicated as "grass area" (per keyed note #1), are to be seeded with a locally adaptive turf seed mix after finish grading unless otherwise noted. All newly seeded areas shall have a minimum of 6" of topsoil. Hold soil down 1" from pavement elevation. Contractor to supply straw mulch where grass seed has been planted.

H. All radii indicated on plans shall be constructed as circular.

I. Resurface or reconstruct at least to original conditions all areas where traffic by contractors, subcontractors or suppliers have damaged existing pavement, lawns or other improvements during construction, after construction work is complete.

J. The contractor shall verify all dimensions and elevations in the field prior to the start of construction. The contractor shall be responsible for all field dimensions and elevations during the entire construction schedule. If any discrepancies are found in these plans from actual field dimensions, the contractor shall contact the engineer immediately.

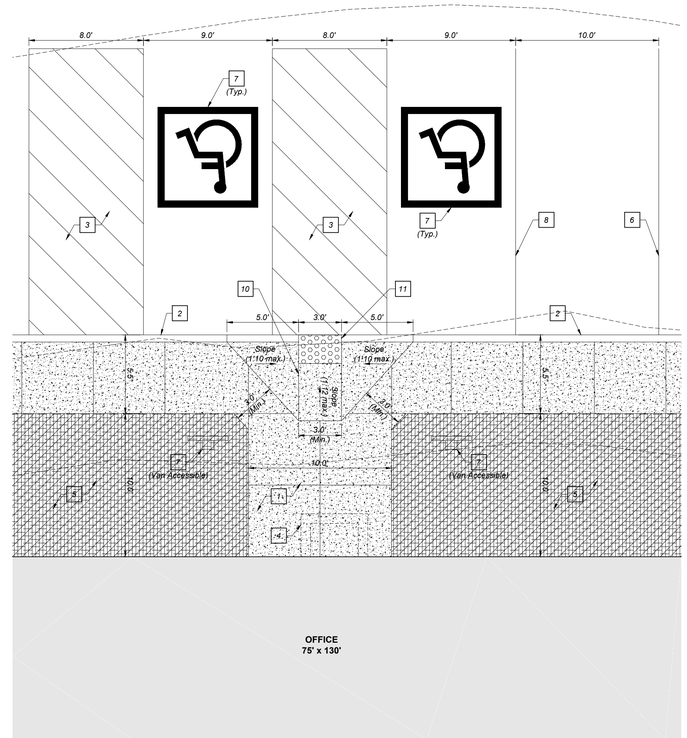

ENLARGED ADA RAMP PLAN

Scale: 1" = 5'

KEYED NOTES:

1.) 4" concrete sidewalk.

2.) Integral concrete curb and walk.

3.) Accessible parking design to meet all governing codes. Quantity as required by I.A.C. & A.D.A. - accessible parking spaces and their access aisles shall be 1:20 running-slope and 1:48 cross-slope. Accessible route delineation shall be 4" wide blue outline w/ 4" blue cross hatching.

4.) Frost footing at man doors.

5.) Proposed Landscaping: (Shown for reference). See Sheet L1.0 "Site Landscaping Plan".

6.) Pavement painting: 4" wide yellow striping.

7.) Pavement painting: "Universal Symbol", blue painted field w/ white painted wheelchair and border.

8.) Pavement painting: 4" wide blue paint striping at accessible parking space.

9.) Accessible parking sign (post-mounted).

10.) Curb ramp w/detectable warning mat.

11.) Detectable warning mat: (1) 2'x3' tile, cast-in-place w/truncated domes complying with ADA guidelines, brick red. Equal to Detectable Warning Systems - "EZ Set Tile".

*NOTE: See "SITE PLAN REVIEW SUBMITTAL PACKET" for typical construction details.

NORTH

Scale: 1 in. = 20 ft.

0' 20' 40' 60'

Graphic Scale

REV	DATE	DESCRIPTION	DWN BY	DES BY	CHK BY	APP BY

ISSUE DATE 03/01/2019 SCALE AS NOTED CTR INT. 2"
SURVEYED BY COM CHECKED BY KJB
DRAWN BY EDW APPROVED BY MJB

Diversified Engineering Inc.
CONSULTING ENGINEERS & SURVEYORS
175 RAY AVENUE, N.E.
NEW PHILADELPHIA, OH 44663
Phone: (330) 364-6531
Fax: (330) 364-6532
e-mail: det@dive-eng.com
Web: www.dive-eng.com

WASTE MANAGEMENT

PROJECT: TRUCK MAINTENANCE FACILITY
GERMANTOWN, WI

SHEET TITLE: ENLARGED SITE IMPROVEMENT PLAN

SHEET NO: C1.5

JOB NO: ENG-1465

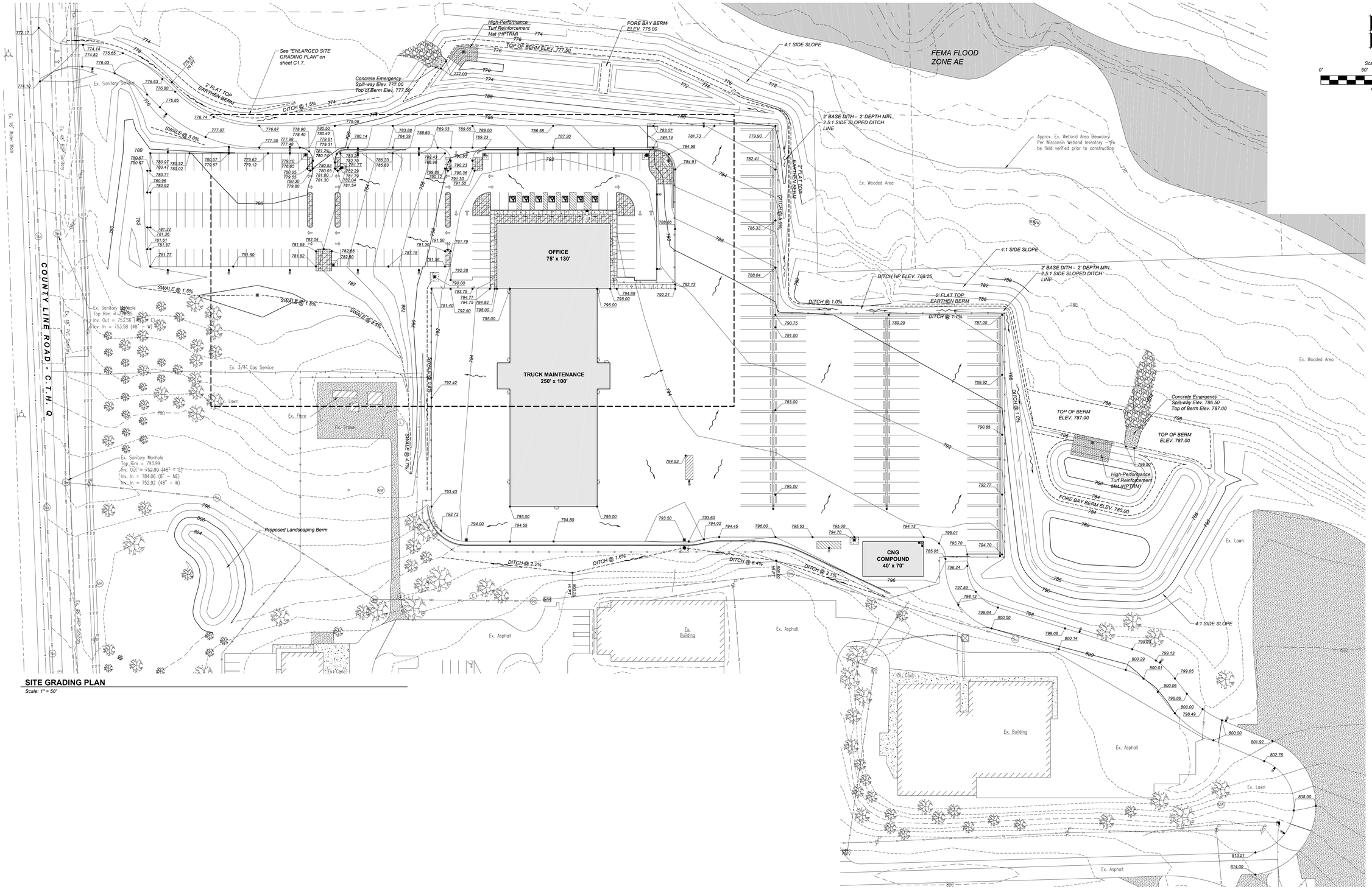

SITE GRADING PLAN

Scale: 1" = 50'

REV	DATE	DESCRIPTION	DWN BY	DES BY	CHK BY	APP BY

ISSUE DATE 03/07/2019 SCALE 1" = 50' CTR INT. 2'
SURVEYED BY COM CHECKED BY KJB
DRAWN BY EDW APPROVED BY MJB

Diversified Engineering Inc.
CONSULTING ENGINEERS & SURVEYORS
178 RAY AVENUE, N.E.
NEW PHILADELPHIA, OH 44663
Phone: (330) 364-5531
Fax: (330) 364-5533
e-mail: diei@de-eng.com
Web: www.de-eng.com

WASTE MANAGEMENT

PROJECT: TRUCK MAINTENANCE FACILITY
GERMANTOWN, WI

SHEET TITLE: SITE GRADING PLAN

SHEET NO: C1.6

JOB NO: ENG-1465

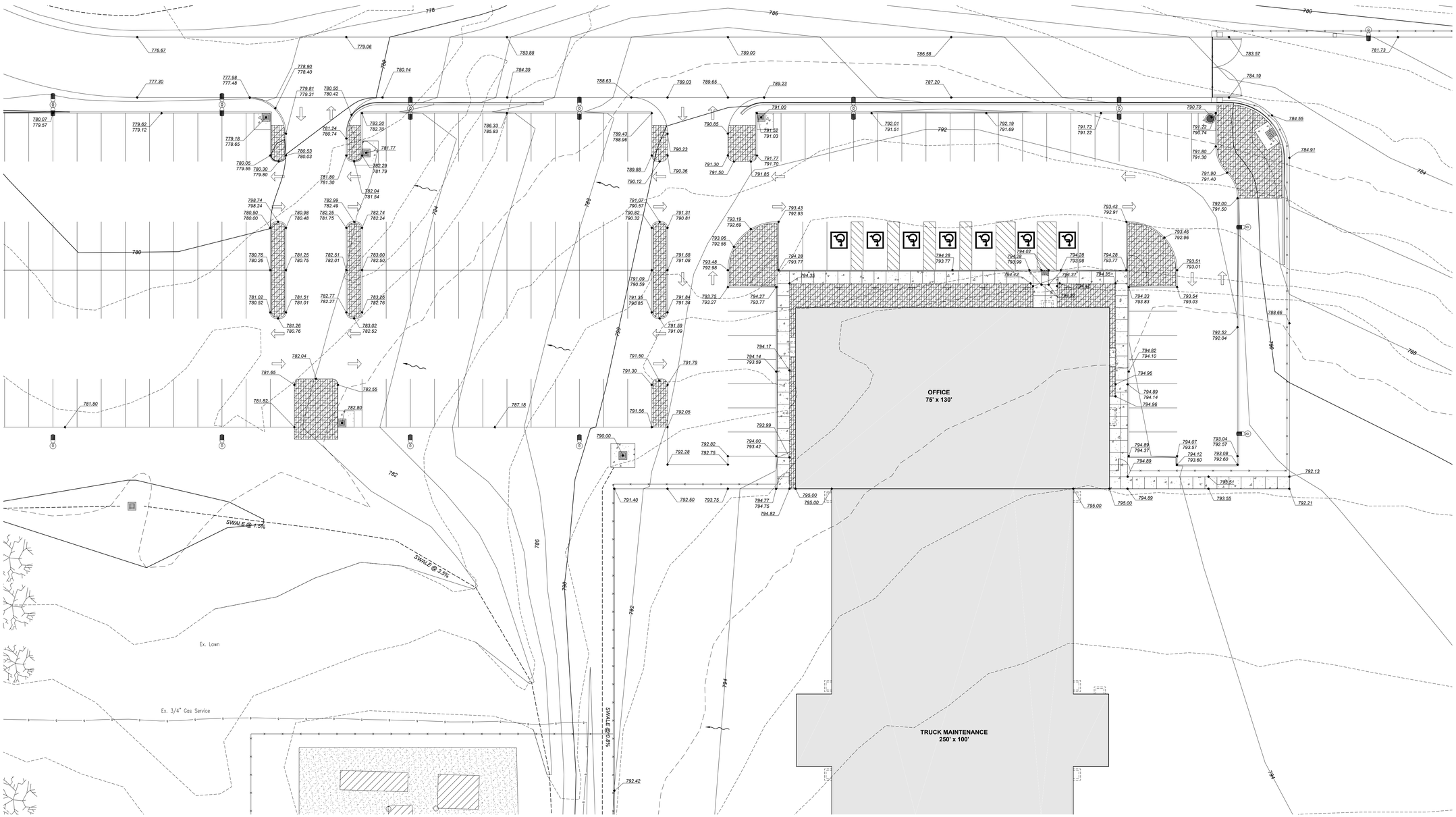

ENLARGED SITE GRADING PLAN

Scale: 1" = 20'

REV	DATE	DESCRIPTION	DWN BY	DES BY	CHK BY	APP BY

ISSUE DATE 03/01/2019 SCALE AS NOTED CTR INT. 2'
SURVEYED BY COM CHECKED BY KJB
DRAWN BY DSW APPROVED BY MJB

Diversified Engineering Inc.
CONSULTING ENGINEERS & SURVEYORS
175 RAY AVENUE, N.E.
NEW PHILADELPHIA, OH 44663
Phone: (330) 364-1831
Fax: (330) 364-1833
e-mail: dei@dei-eng.com
Web: www.dei-eng.com

WASTE MANAGEMENT

PROJECT: TRUCK MAINTENANCE FACILITY
GERMANTOWN, WI

SHEET TITLE: ENLARGED SITE GRADING PLAN

SHEET NO:

C1.7

JOB NO: ENG-1465

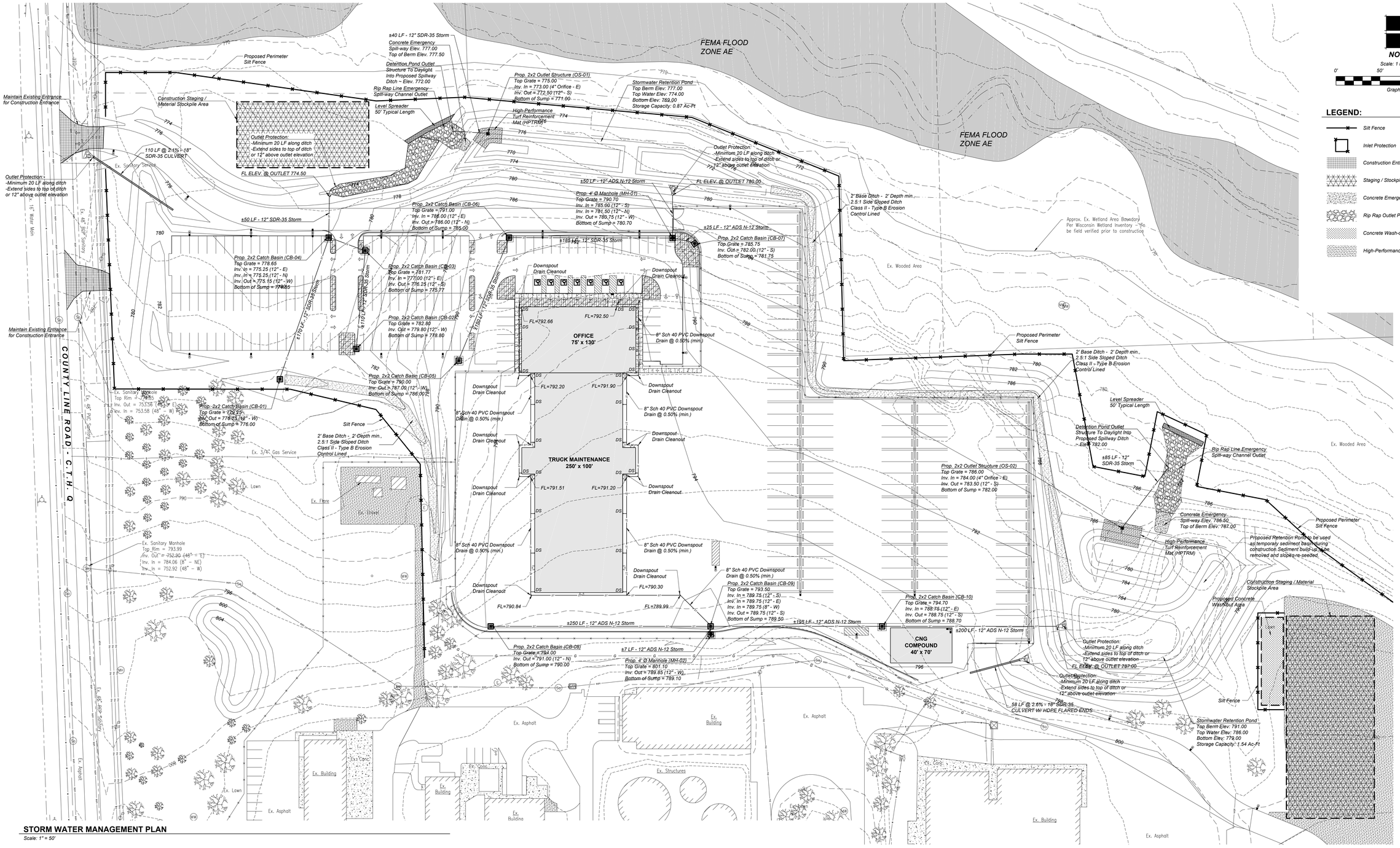

STORM WATER MANAGEMENT PLAN

Scale: 1" = 50'

GENERAL NOTES:

A. STREET SWEEPING: Streets directly adjacent to construction entrances and receiving traffic from the development area shall be cleaned daily to remove sediment tracked off-site.

B. INTERNAL INSPECTION AND MAINTENANCE: All controls on the development shall be inspected at least once every seven (7) calendar days and within 24 hours after any storm event greater than one-half (0.5) inch of rain per 24 hour period by the Owner.

REV	DATE	DESCRIPTION	DWN BY	DES BY	CHK BY	APP BY

ISSUE DATE 03/01/2019 | SCALE 1" = 50' | CTR INT. 2'
SURVEYED BY COM | CHECKED BY KJB
DRAWN BY DSW | APPROVED BY MJB

Diversified Engineering Inc.
CONSULTING ENGINEERS & SURVEYORS
175 RAY AVENUE, N.E.
NEW PHILADELPHIA, OH 44663
Phone: (330) 364-6131
Fax: (330) 364-6132
e-mail: dei@dei-eng.com
Web: www.dei-eng.com

WASTE MANAGEMENT

PROJECT: TRUCK MAINTENANCE FACILITY GERMANTOWN, WI

SHEET TITLE: STORM WATER MANAGEMENT PLAN

SHEET NO: C1.8

JOB NO: ENG-1465

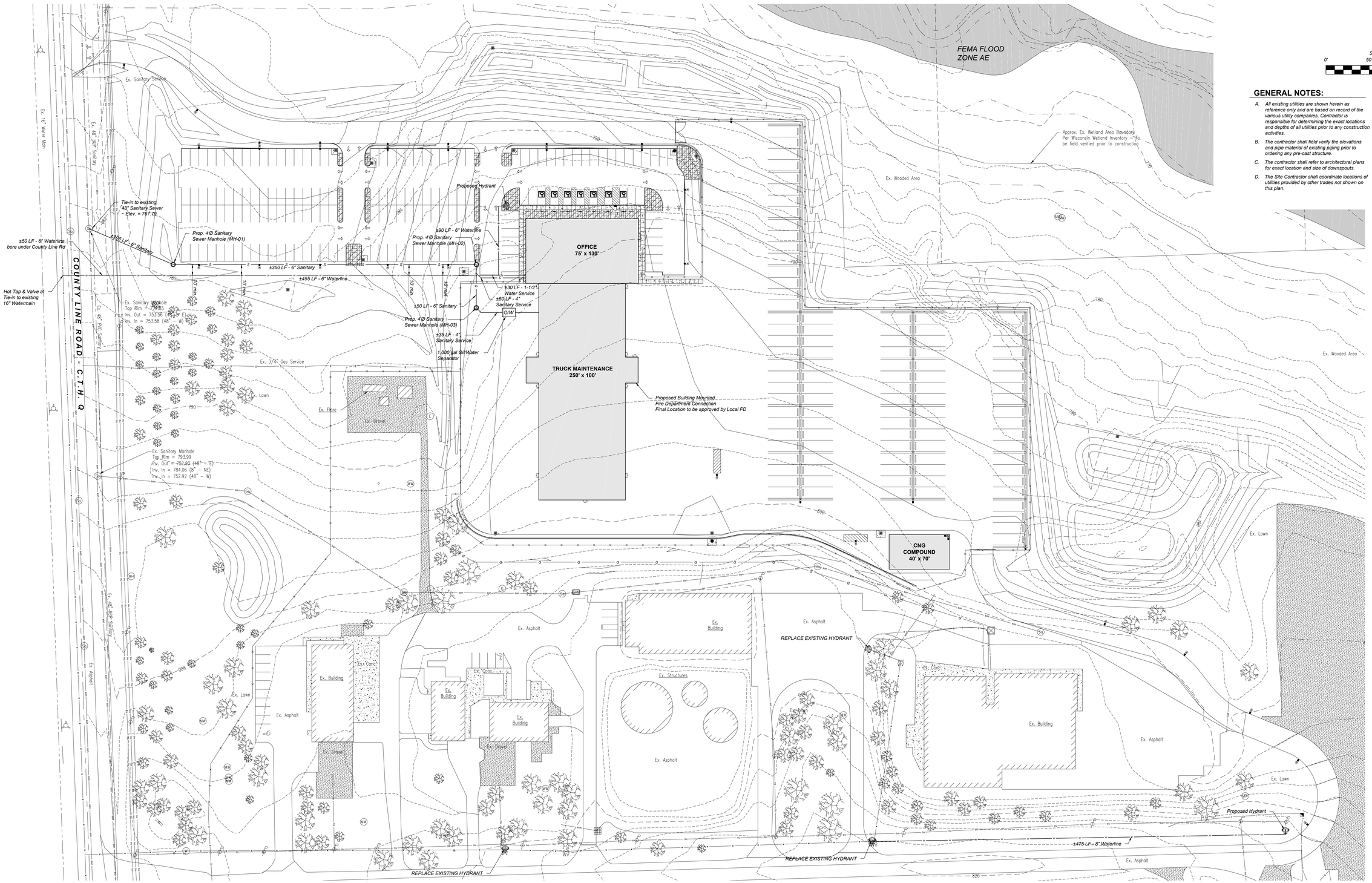

SITE UTILITY PLAN

Scale: 1" = 50'

NORTH

Scale: 1 in . = 50 ft.

0' 50' 100' 150'

Graphic Scale

GENERAL NOTES:

A. All existing utilities are shown herein as reference only and are based on record of the various utility companies. Contractor is responsible for determining the exact locations and depths of all utilities prior to any construction activities.

B. The contractor shall field verify the elevations and pipe material of existing piping prior to ordering any pre-cast structure.

C. The contractor shall refer to architectural plans for exact location and size of downspouts.

D. The Site Contractor shall coordinate locations of utilities provided by other trades not shown on this plan.

REV	DATE	DESCRIPTION	DWN BY	DES BY	CHK BY	APP BY

ISSUE DATE: 03/01/2019 SCALE: 1" = 50' CTR INT.: 2'

SURVEYED BY: CGM CHECKED BY: KJB

DRAWN BY: DSW APPROVED BY: MJB

Diversified Engineering Inc.
CONSULTING ENGINEERS & SURVEYORS
275 RAY AVENUE, N.E.
NEW PHILADELPHIA, OH 44663
Phone: (330) 364-5531
Fax: (330) 364-5533
e-mail: diesl@de-eng.com
Web: www.de-eng.com

WASTE MANAGEMENT

PROJECT: TRUCK MAINTENANCE FACILITY GERMANTOWN, WI

SHEET TITLE: SITE UTILITY PLAN

SHEET NO: C1.9

JOB NO: ENG-1465

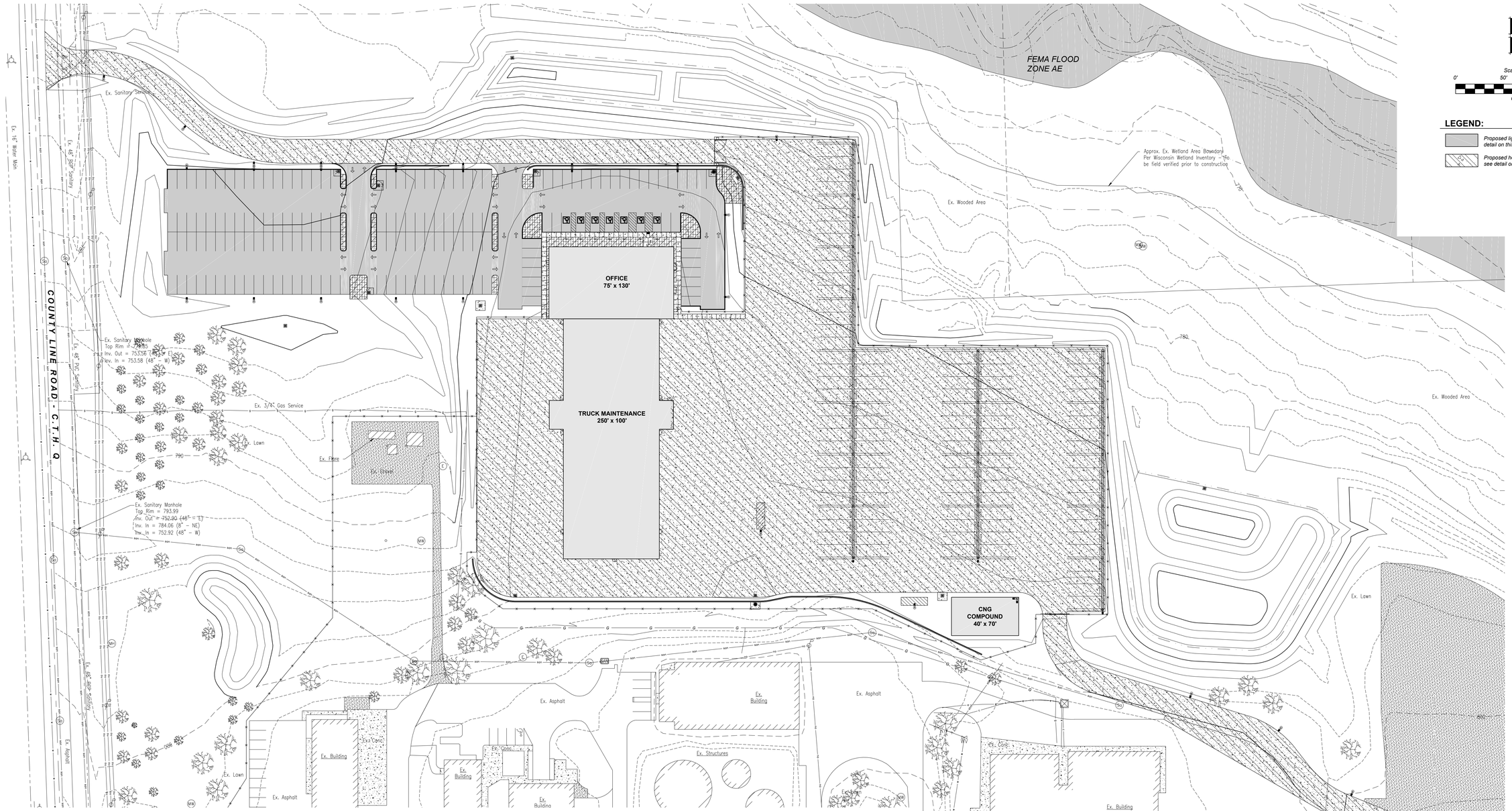

HARD SURFACE KEY PLAN

Scale: 1" = 50'

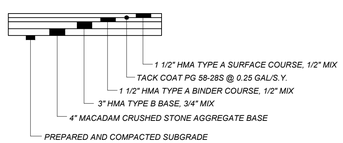

TYPICAL HOT MIX ASPHALT SECTION (LIGHT-DUTY) (BASE BID)

DETAIL 1/C1.10

SCALE: NOT TO SCALE

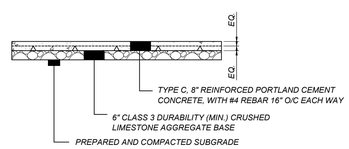

TYPICAL HEAVY-DUTY PORTLAND CEMENT CONCRETE SECTION (BASE BID)

DETAIL 2/C1.10

SCALE: NOT TO SCALE

ISSUE DATE	03/01/2019	SCALE	1" = 50'	CTR INT.	2'
SURVEYED BY		CHECKED BY		KJB	
DRAWN BY	COM / DSW	APPROVED BY		MJB	

REV	DATE	DESCRIPTION	DWN BY	DES BY	CHK BY	APP BY

Diversified Engineering Inc.
CONSULTING ENGINEERS & SURVEYORS
178 RAY AVENUE, N.E.
NEW PHILADELPHIA, OH 44663
Phone: (330) 364-5531
Fax: (330) 364-5531
e-mail: div@de-eng.com
Web: www.de-eng.com

WASTE MANAGEMENT

PROJECT: TRUCK MAINTENANCE FACILITY
GERMANTOWN, WI

SHEET TITLE: HARD SURFACE KEY PLAN

SHEET NO: C1.10

JOB NO: ENG-1465

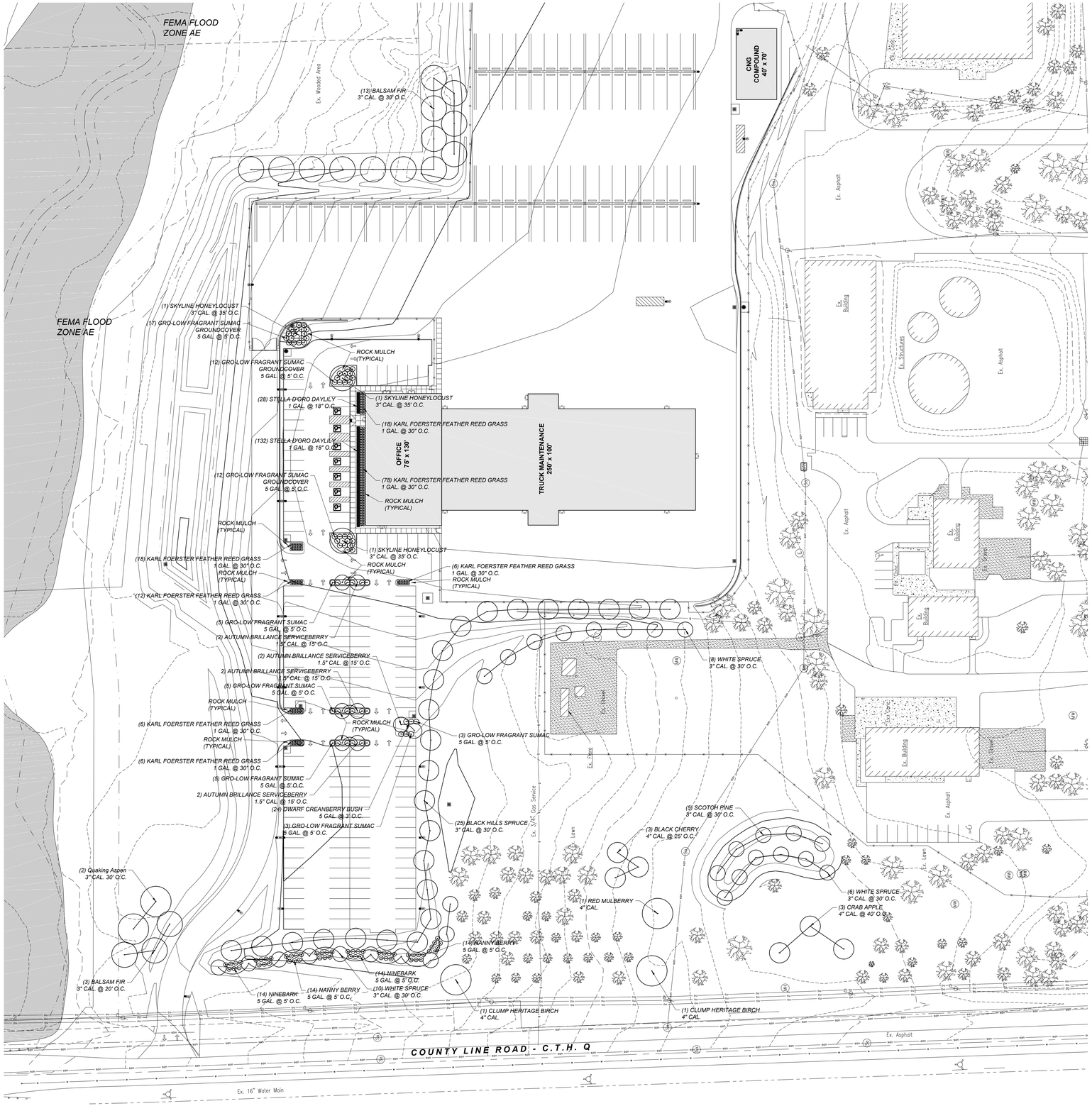

SITE LANDSCAPING PLAN

Scale: 1" = 50'

NORTH

Scale: 1 in . = 50 ft.

0' 50' 100' 150'

Graphic Scale

GENERAL NOTES:

1. Verify all conditions and dimensions shown on the plans at the site prior to commencement of work. Notify landscape architect of an discrepancies. Contractor shall notify utility companies and verify the exact location of utility easements and all utilities in the field prior to commencement of excavation or construction activities.
2. All work shall conform to the Village of Germantown and S.U.D.A.S. standards unless noted otherwise.
3. Underground utilities shown are for information only, locations have not been verified. Contractor shall contact Wisconsin One-Call and verify location of existing underground utilities before commencing any excavation to avoid damage. The contractor shall be responsible for repair of an damage caused by construction activities. Exercise extreme care in excavating and working around existing site features and utilities. Verify location and condition of all utilities. Field adjust plant locations so as to avoid conflicts with utilities.
4. Verify plant counts. If quantities in planting schedule vary from landscape plan graphic, graphic shall prevail.
5. Locate plant material by measuring off of the drawing to the nearest 6" and stake where trees will be located. The Landscape Architect will review prior to planting.
6. Align and equally space in all directions tree, shrub and perennials designated per these drawing and typical details.
7. Backfill soil (planting soil) for tree pits shall consist of a mixture of two parts top soil and one part compost. Remove soil excavated from tree planting area and dispose of off site.
8. Remove existing topsoil and stockpile on site; topsoil to be incorporated into soils at a later date.
9. Finish grade of planter areas shall be 3 inches below adjacent curb or structure to allow for 3" of mulch depth.
10. All landscape beds shall be edged with DURAEDGE 5"x$\frac{1}{8}$" steel lawn edging as manufacturing by the J.D. Russell Company (800-888-9709) or approved equal. Edging shall be hot rolled steel with an electrostatically applied powder coat surface paint, black in color.
11. New trees shall meet the minimum standards of ANSI Z60.1, Latest Edition. Plants shall be freshly dug or well-established in container as applicable; not root-bound in the container. Trees with broken or unidentifiable leader, broken or mushroomed balls, lopsided growth, or weak open structure (in the opinion of the landscape architect) will not be acceptable.
12. The contractor shall submit at least one nursery photograph of each type of tree species for approval by the landscape architect prior to shipping and installation. Most species are matched so the specimens must have consistent branching heights and habits within species. The landscape architect will use the submitted photographs as a standard of comparison for each tree species installed on site.
13. Wood mulch for tree rings and where indicated on the plan shall be 3" deep, composed of cedar or cypress wood of uniform color and long, fibrous nature (2-4 inches in length). Do not use walnut. Do not use chips. Apply pre-emergence herbicide over the top of all wood mulch. Mulch rings around new trees shall be minimum 6' in diameter. Thoroughly water mulched areas, rake to a smooth finished surface.
14. Planting beds next to the building and parking lot islands shall be 3" deep washed river rock mulch over weed barrier fabric. Fabric shall be a woven polypropylene, 3.5 to 4.0 ounce products. Apply pre-emergence herbicide over the top of all rock mulch.
15. All plants shall be maintained and watered by the contractor through substantial completion.
16. No trees, bushes, or vegetation existing on site to remain.

REV	DATE	DESCRIPTION	DWN BY	DES BY	CHK BY	APP BY

ISSUE DATE 03/01/2019 SCALE 1" = 50' CTR INT. -
SURVEYED BY COM CHECKED BY KJB
DRAWN BY LGB APPROVED BY MJB

Diversified Engineering Inc.
CONSULTING ENGINEERS & SURVEYORS
175 RAY AVENUE, N.E.
NEW PHILADELPHIA, OH 44663
Phone: (330) 364-5631
Fax: (330) 343-7033
e-mail: deidile-eng.com
Web: www.diversifieg.com

WASTE MANAGEMENT

PROJECT: TRUCK MAINTENANCE FACILITY GERMANTOWN, WI

SHEET TITLE: SITE LANDSCAPING PLAN

SHEET NO: L1.0

JOB NO: ENG-1465

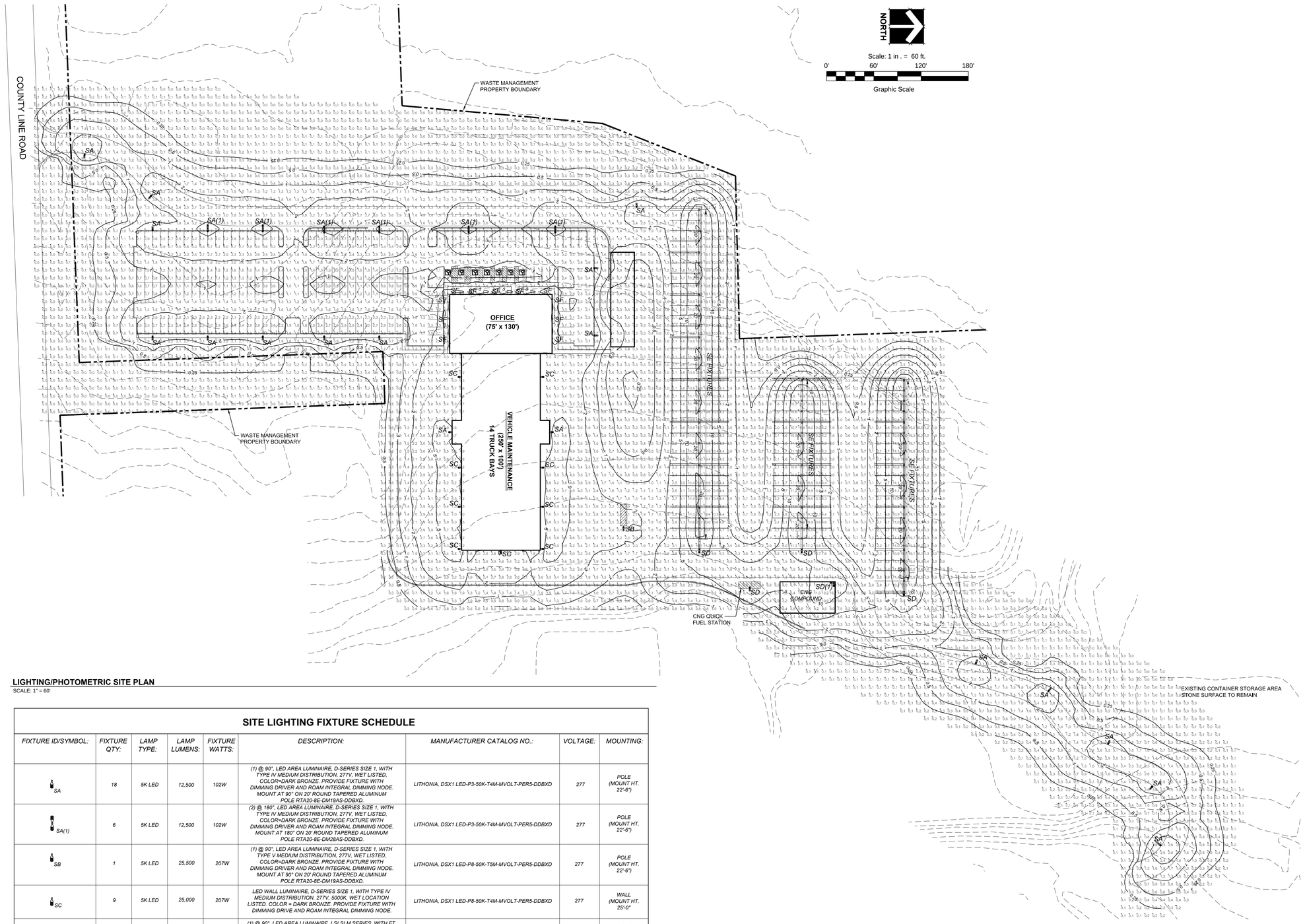

LIGHTING/PHOTOMETRIC SITE PLAN

SCALE: 1" = 60'

SITE LIGHTING FIXTURE SCHEDULE

FIXTURE ID/SYMBOL:	FIXTURE QTY:	LAMP TYPE:	LAMP LUMENS:	FIXTURE WATTS:	DESCRIPTION:	MANUFACTURER CATALOG NO.:	VOLTAGE:	MOUNTING:
SA	18	5K LED	12,500	102W	(1) @ 90°, LED AREA LUMINAIRE, D-SERIES SIZE 1, WITH TYPE IV MEDIUM DISTRIBUTION, 277V, WET LISTED, COLOR=DARK BRONZE. PROVIDE FIXTURE WITH DIMMING DRIVER AND ROAM INTEGRAL DIMMING NODE. MOUNT AT 90° ON 20' ROUND TAPERED ALUMINUM POLE RTA20-8E-DM19AS-DDBXD.	LITHONIA, DSX1 LED-P3-50K-T4M-MVOLT-PER5-DDBXD	277	POLE (MOUNT HT. 22'-6")
SA(1)	6	5K LED	12,500	102W	(2) @ 180°, LED AREA LUMINAIRE, D-SERIES SIZE 1, WITH TYPE IV MEDIUM DISTRIBUTION, 277V, WET LISTED, COLOR=DARK BRONZE. PROVIDE FIXTURE WITH DIMMING DRIVER AND ROAM INTEGRAL DIMMING NODE. MOUNT AT 180° ON 20' ROUND TAPERED ALUMINUM POLE RTA20-8E-DM28AS-DDBXD.	LITHONIA, DSX1 LED-P3-50K-T4M-MVOLT-PER5-DDBXD	277	POLE (MOUNT HT. 22'-6")
SB	1	5K LED	25,500	207W	(1) @ 90°, LED AREA LUMINAIRE, D-SERIES SIZE 1, WITH TYPE V MEDIUM DISTRIBUTION, 277V, WET LISTED, COLOR=DARK BRONZE. PROVIDE FIXTURE WITH DIMMING DRIVER AND ROAM INTEGRAL DIMMING NODE. MOUNT AT 90° ON 20' ROUND TAPERED ALUMINUM POLE RTA20-8E-DM19AS-DDBXD.	LITHONIA, DSX1 LED-P8-50K-T5M-MVOLT-PER5-DDBXD	277	POLE (MOUNT HT. 22'-6")
SC	9	5K LED	25,000	207W	LED WALL LUMINAIRE, D-SERIES SIZE 1, WITH TYPE IV MEDIUM DISTRIBUTION, 277V, 5000K, WET LOCATION LISTED. COLOR = DARK BRONZE. PROVIDE FIXTURE WITH DIMMING DRIVE AND ROAM INTEGRAL DIMMING NODE.	LITHONIA, DSX1 LED-P8-50K-T4M-MVOLT-PER5-DDBXD	277	WALL (MOUNT HT. 25'-0"
SD	4	5K LED	32,700	249W	(1) @ 90°, LED AREA LUMINAIRE, LSI SLM SERIES, WITH FT (FORWARD THROW) DISTRIBUTION, 277V, WET LISTED, COLOR=BLACK. MOUNT AT 90° ON 20' ROUND TAPERED ALUMINUM POLE RTPB5-A156-20-S-BLK.	LSI, SLM-LED-30L-SIL-FT-UNV-DIM-50-70CRI-BLK	277	POLE (MOUNT HT. 22'-6")
SD(1)	1	5K LED	32,700	249W	(2) @ 90°, LED AREA LUMINAIRE, LSI SLM SERIES, WITH FT (FORWARD THROW) DISTRIBUTION, 277V, WET LISTED, COLOR=BLACK. MOUNT AT 90° ON 20' ROUND TAPERED ALUMINUM POLE RTPB5-A156-20-D90-BLK.	LSI, SLM-LED-30L-SIL-FT-UNV-DIM-50-70CRI-BLK	277	POLE (MOUNT HT. 22'-6")
SE	68	5K LED	10,500	74W	LED SURFACE MOUNT, STANDARD SYMMETRIC DISTRIBUTION, 277V, 5000K, WET LOCATION LISTED, COLOR = WHITE	LSI, CRUS-SC-LED-LW-50-UE-WHT	277	SURFACE MOUNT ON TRUSS (±19'-0")
SF	11	5K LED	3,214	29W	LED ARCHITECTURAL WALL SCONCE, QUARTER SPHERE WITH TYPE II DISTRIBUTION, 277V, 5000K, WET LOCATION LISTED. COLOR = DARK BRONZE	LITHONIA, WSQ LED-PZ-50K-SRZ-MVOLT-DDBXD	277	WALL (MOUNT HT. 12'-0"

ISSUE DATE	2/28/2019	SCALE	1" = 60'	CTR INT.	2'
SURVEYED BY		CHECKED BY			
DRAWN BY	BWS	APPROVED BY			

REV	DATE	DESCRIPTION	DWN BY	DES BY	CHK BY	APP BY

Diversified Engineering Inc.
CONSULTING ENGINEERS & SURVEYORS
175 RAY AVENUE, N.E.
NEW PHILADELPHIA, OH 44663
Phone: (330) 364-5833
Fax: (330) 364-5834
e-mail: dei@dei-eng.com
Web: www.dei-eng.com

WASTE MANAGEMENT

PROJECT: TRUCK MAINTENANCE FACILITY
GERMANTOWN, WI

SHEET TITLE: CONDITIONAL USE PERMIT
PROPOSED LIGHTING/PHOTOMETRIC PLAN

SHEET NO: 1/1

PROJECT NO: ENG-1465

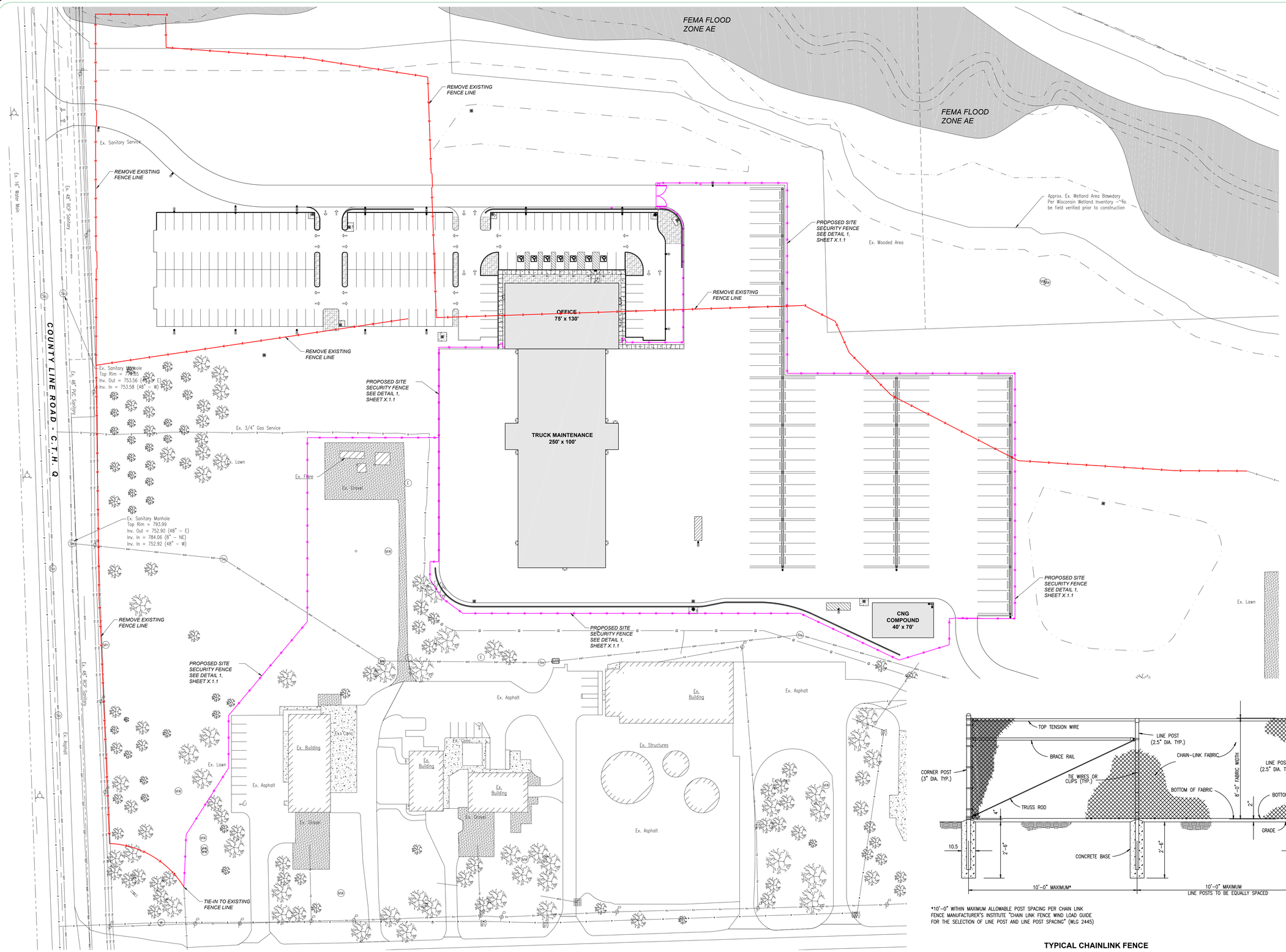

SITE FENCING PLAN

Scale: 1" = 50'

NORTH

Scale: 1 in . = 50 ft.

0' 50' 100' 150'

Graphic Scale

LEGEND:

- Proposed Fence Removal
- Proposed Chain Link Fence

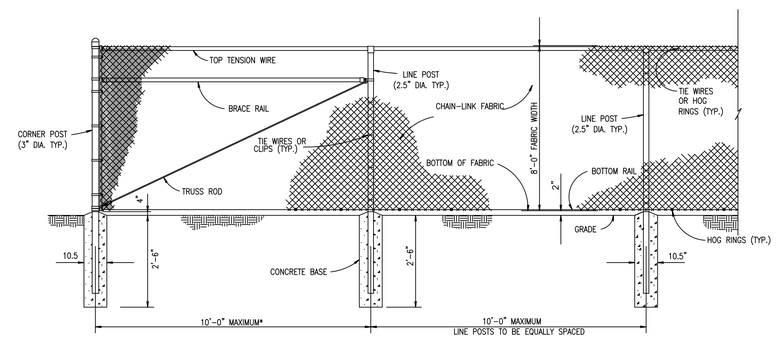

*10'-0" WITHIN MAXIMUM ALLOWABLE POST SPACING PER CHAIN LINK FENCE MANUFACTURER'S INSTITUTE "CHAIN LINK FENCE WIND LOAD GUIDE FOR THE SELECTION OF LINE POST AND LINE POST SPACING" (WLG 2445)

TYPICAL CHAINLINK FENCE

DETAIL 1 / X1.1

SCALE: NOT TO SCALE

REV	DATE	DESCRIPTION	DWN BY	DES BY	CHK BY	APP BY

ISSUE DATE 03/01/2019 SCALE 1" = 50' CTR INT. 2'
SURVEYED BY COM CHECKED BY KJB
DRAWN BY EDW APPROVED BY MJB

Diversified Engineering Inc.
CONSULTING ENGINEERS & SURVEYORS
175 RAY AVENUE, N.E.
NEW PHILADELPHIA, OH 44663
Phone: (330) 364-6531
Fax: (330) 364-6533
e-mail: dei@dei-eng.com
Web: www.dei-eng.com

WASTE MANAGEMENT

PROJECT: TRUCK MAINTENANCE FACILITY GERMANTOWN, WI

SHEET TITLE: SITE FENCING EXHIBIT

SHEET NO: X1.1

JOB NO: ENG-1465

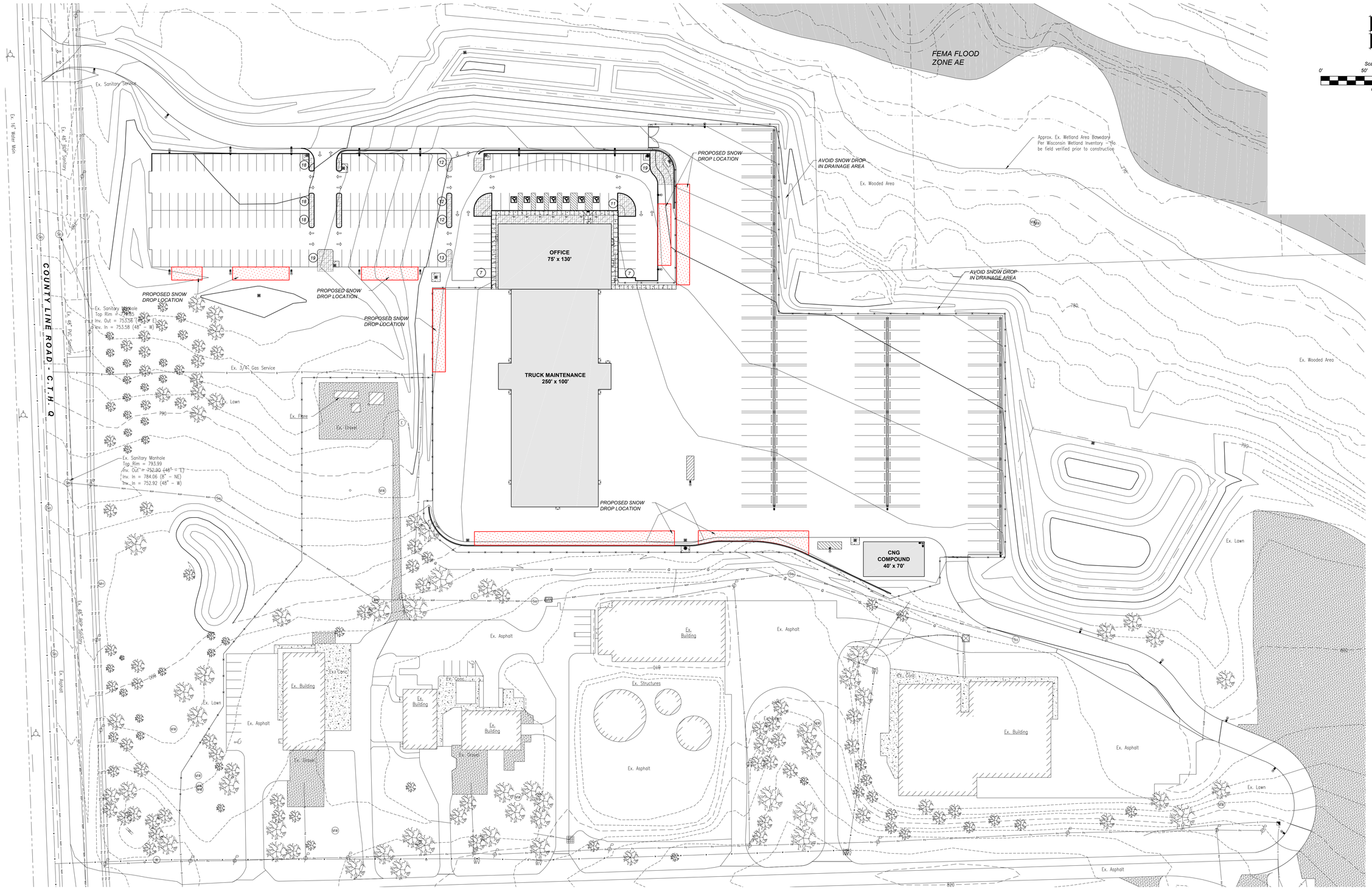

SNOW REMOVAL PLAN

Scale: 1" = 50'

REV	DATE	DESCRIPTION	DWN BY	DES BY	CHK BY	APP BY

ISSUE DATE 03/07/2019 SCALE 1" = 50' CTR INT. 2'
SURVEYED BY COM CHECKED BY KJB
DRAWN BY EDW APPROVED BY MJB

Diversified Engineering Inc.
CONSULTING ENGINEERS & SURVEYORS
275 RAY AVENUE, N.E.
NEW PHILADELPHIA, OH 44663
Phone: (330) 364-5151
Fax: (330) 364-5153
e-mail: deei@deeinc.com
Web: www.deeinc.com

WASTE MANAGEMENT

PROJECT: TRUCK MAINTENANCE FACILITY
GERMANTOWN, WI

SHEET TITLE: SITE SNOW REMOVAL EXHIBIT

SHEET NO: X1.2

JOB NO: ENG-1465

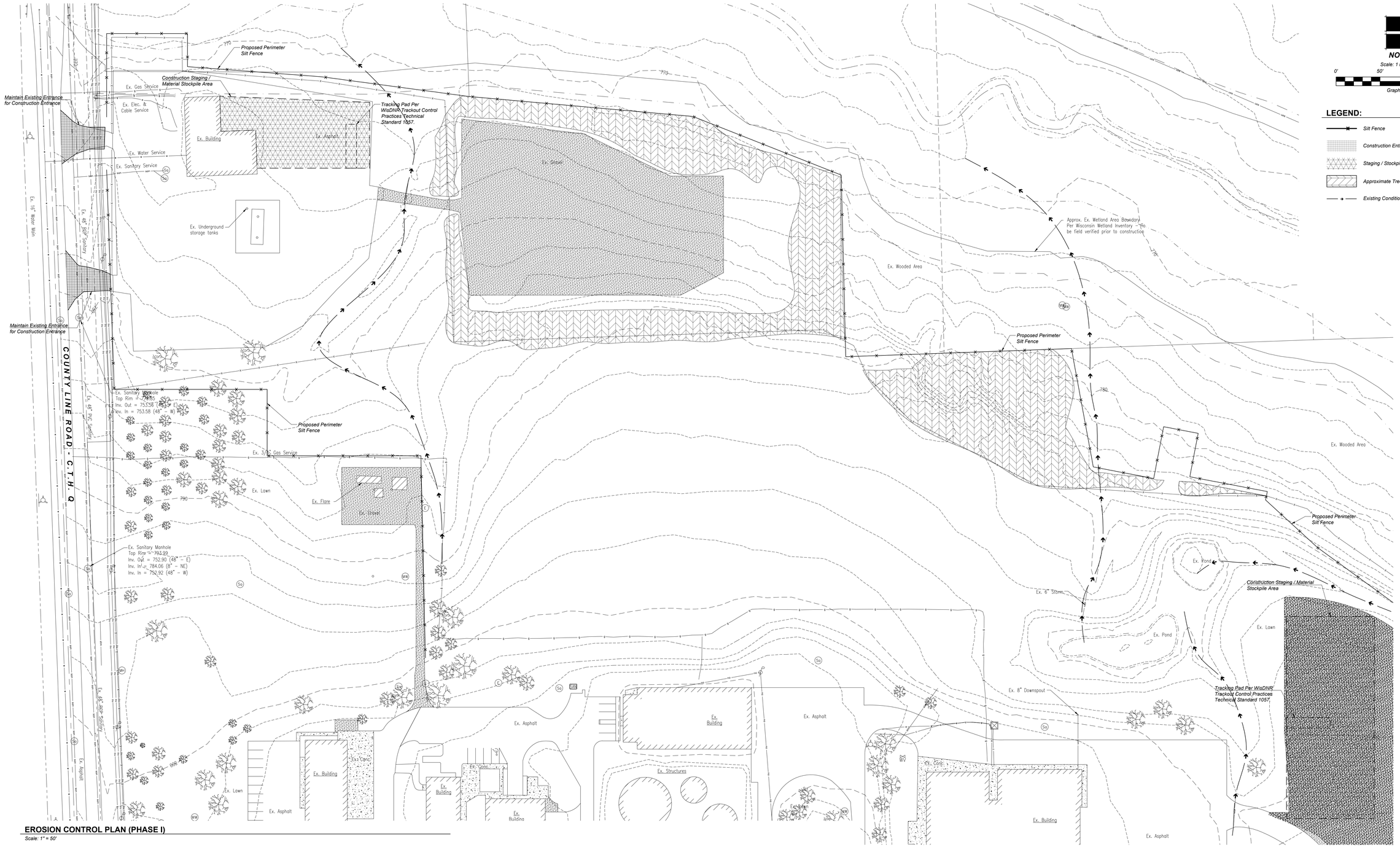

EROSION CONTROL PLAN (PHASE I)

Scale: 1" = 50'

GENERAL NOTES:

A. STREET SWEEPING: Streets directly adjacent to construction entrances and receiving traffic from the development area shall be cleaned daily to remove sediment tracked off-site.

B. INTERNAL INSPECTION AND MAINTENANCE: All controls on the development shall be inspected at least once every seven (7) calendar days and within 24 hours after any storm event greater than one-half (0.5) inch of rain per 24 hour period by the Owner.

C. SEEDING AND MULCHING: All disturbed areas shall be permanently seeded upon completion of grading activities.

D. All erosion and sediment control BMPs shown on plan are for reference and are to be field verified as required to meet, at minimum, all local, state, and federal regulations governing such operations.

EROSION AND SEDIMENT CONTROL BASIC PRINCIPLES:

1. Minimize open area by phasing or sequencing construction and preserving existing vegetation where possible.
2. Divert storm water away from disturbed or exposed areas when possible.
3. Install BMPs to control erosion and sediment and manage storm water.
4. Inspect the site regularly and properly maintain BMPs, especially after rainstorms.
5. Revise the plan as site conditions change during construction and improve the plans if BMPs are not effectively controlling erosion and sediment.
6. Keep the construction site clean by putting trash in trash cans, keeping storage bins covered, and preventing or removing excess sediment on roads and other impervious surfaces.

CONSTRUCTION SEQUENCING NOTES (PHASE I):

1. Utilize / maintain existing site entrances as construction entrances.
2. Establish construction staging areas / tracking pads.
3. Install perimeter silt fence.
4. Clearing and grubbing.
5. Minor demolition, fences, gates, etc.

REV	DATE	DESCRIPTION	DWN BY	DES BY	CHK BY	APP BY

ISSUE DATE 03/01/2019 SCALE 1" = 50' CTR INT. 2'
SURVEYED BY COM CHECKED BY NJB
DRAWN BY EDW APPROVED BY MJB

Diversified Engineering Inc.
CONSULTING ENGINEERS & SURVEYORS
175 RAY AVENUE, N.E.
NEW PHILADELPHIA, OH 44663
Phone: (330) 364-6531
Fax: (330) 343-4551
e-mail: dei@dei-eng.com
Web: www.dei-eng.com

WASTE MANAGEMENT

PROJECT: TRUCK MAINTENANCE FACILITY
GERMANTOWN, WI

SHEET TITLE: EROSION CONTROL PLAN
(PHASE I)

SHEET NO:
X2.0

JOB NO:
ENG-1465

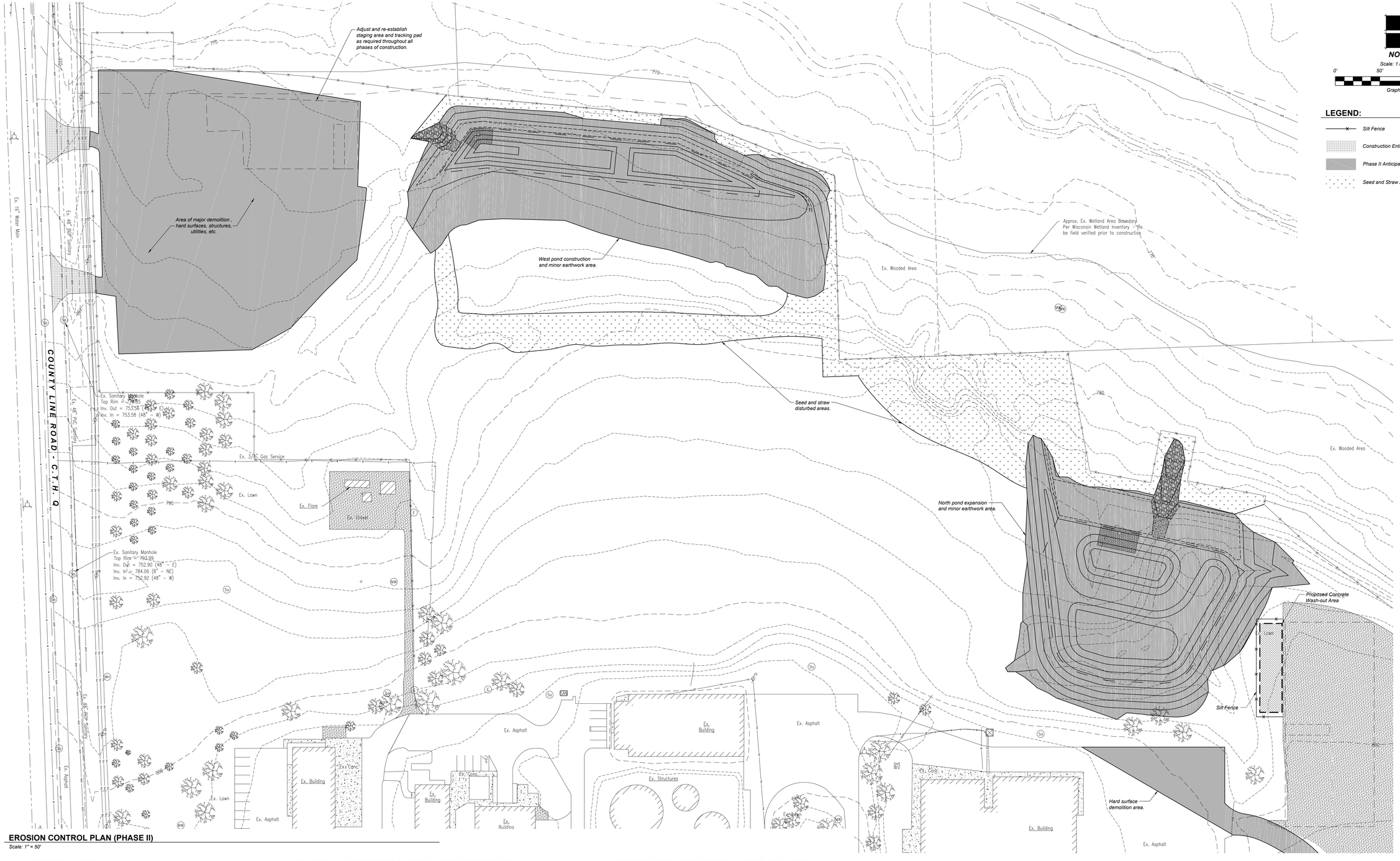

EROSION CONTROL PLAN (PHASE II)

Scale: 1" = 50'

GENERAL NOTES:

A. STREET SWEEPING: Streets directly adjacent to construction entrances and receiving traffic from the development area shall be cleaned daily to remove sediment tracked off-site.

B. INTERNAL INSPECTION AND MAINTENANCE: All controls on the development shall be inspected at least once every seven (7) calendar days and within 24 hours after any storm event greater than one-half (0.5) inch of rain per 24 hour period by the Owner.

C. SEEDING AND MULCHING: All disturbed areas shall be permanently seeded upon completion of grading activities.

D. All erosion and sediment control BMPs shown on plan are for reference and are to be field verified as required to meet, at minimum, all local, state, and federal regulations governing such operations.

EROSION AND SEDIMENT CONTROL BASIC PRINCIPLES:

1. Minimize open area by phasing or sequencing construction and preserving existing vegetation where possible.
2. Divert storm water away from disturbed or exposed areas when possible.
3. Install BMPs to control erosion and sediment and manage storm water.
4. Inspect the site regularly and properly maintain BMPs, especially after rainstorms.
5. Revise the plan as site conditions change during construction and improve the plans if BMPs are not effectively controlling erosion and sediment.
6. Keep the construction site clean by putting trash in trash cans, keeping storage bins covered, and preventing or removing excess sediment on roads and other impervious surfaces.

CONSTRUCTION SEQUENCING NOTES (PHASE II):

1. West retention pond construction and north retention pond expansion.
2. Major demolition, hard surfaces, structures, utilities, etc.
3. Minor earthwork.
4. Seed and straw disturbed areas.

REV	DATE	DESCRIPTION	DWN BY	DES BY	CHK BY	APP BY

ISSUE DATE 03/01/2019 SCALE 1" = 50' CTR INT. 2'
SURVEYED BY COM CHECKED BY NJB
DRAWN BY DSW APPROVED BY MJB

Diversified Engineering Inc.
CONSULTING ENGINEERS & SURVEYORS
175 RAY AVENUE, N.E.
NEW PHILADELPHIA, OH 44663
Phone: (330) 364-1631
Fax: (330) 364-1633
e-mail: dei@deieng.com
Web: www.deieng.com

WASTE MANAGEMENT

PROJECT: TRUCK MAINTENANCE FACILITY GERMANTOWN, WI

SHEET TITLE: EROSION CONTROL PLAN (PHASE II)

SHEET NO: X2.1

JOB NO: ENG-1465

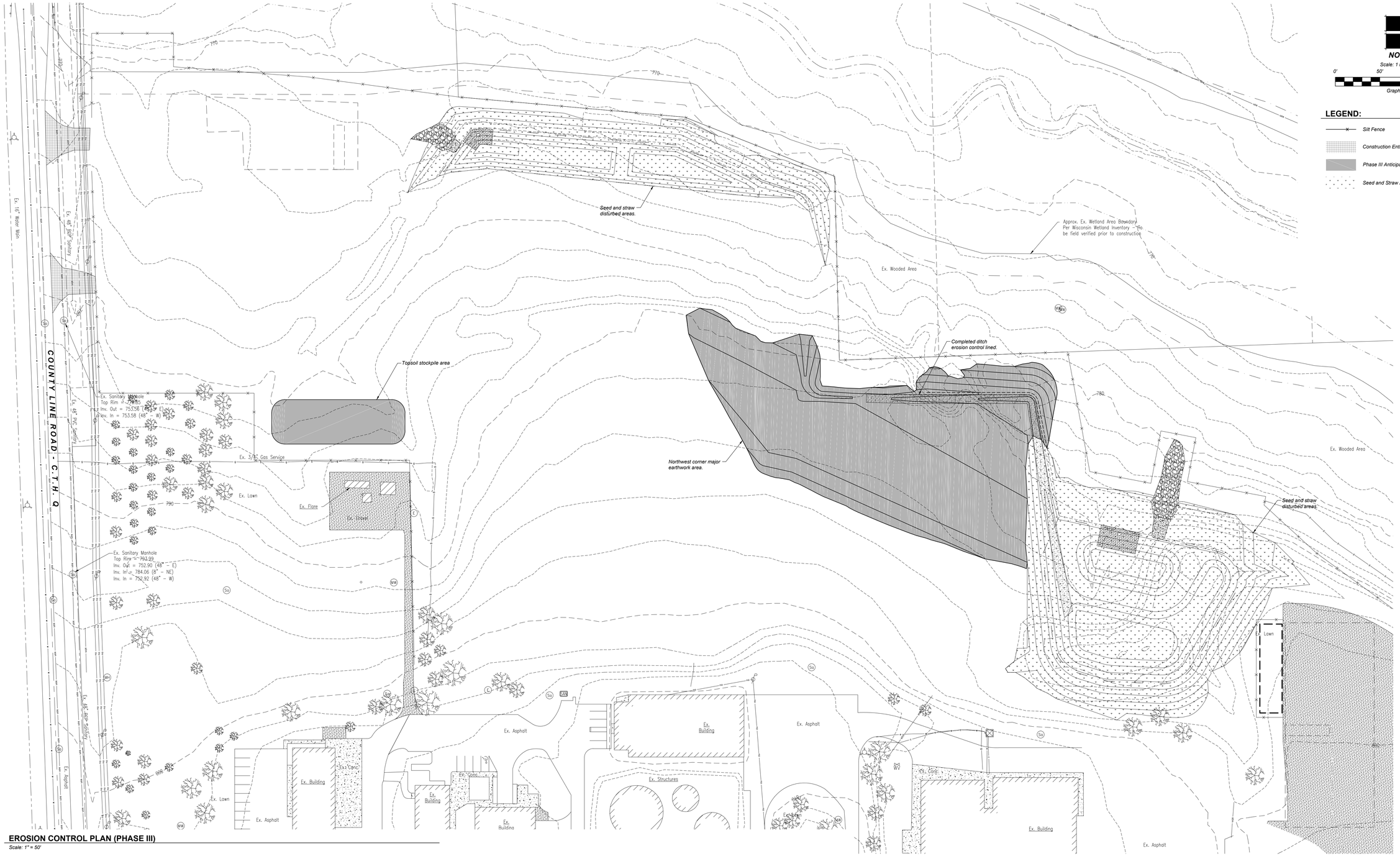

EROSION CONTROL PLAN (PHASE III)

Scale: 1" = 50'

GENERAL NOTES:

A. STREET SWEEPING: Streets directly adjacent to construction entrances and receiving traffic from the development area shall be cleaned daily to remove sediment tracked off-site.

B. INTERNAL INSPECTION AND MAINTENANCE: All controls on the development shall be inspected at least once every seven (7) calendar days and within 24 hours after any storm event greater than one-half (0.5) inch of rain per 24 hour period by the Owner.

C. SEEDING AND MULCHING: All disturbed areas shall be permanently seeded upon completion of grading activities.

D. All erosion and sediment control BMPs shown on plan are for reference and are to be field verified as required to meet, at minimum, all local, state, and federal regulations governing such operations.

EROSION AND SEDIMENT CONTROL BASIC PRINCIPLES:

1. Minimize open area by phasing or sequencing construction and preserving existing vegetation where possible.
2. Divert storm water away from disturbed or exposed areas when possible.
3. Install BMPs to control erosion and sediment and manage storm water.
4. Inspect the site regularly and properly maintain BMPs, especially after rainstorms.
5. Revise the plan as site conditions change during construction and improve the plans if BMPs are not effectively controlling erosion and sediment.
6. Keep the construction site clean by putting trash in trash cans, keeping storage bins covered, and preventing or removing excess sediment on roads and other impervious surfaces.

CONSTRUCTION SEQUENCING NOTES (PHASE III):

1. Field located and construct temporary erosion control BMPs, as required.
2. Begin topsoil stripping and stockpiling.
3. Begin major earthwork on the northwest portion of the site.
4. Seed and straw disturbed areas.

ISSUE DATE	03/01/2019	SCALE	1" = 50'	CTR INT.	2'
SURVEYED BY	COM	CHECKED BY	KJB		
DRAWN BY	EGW	APPROVED BY	MJB		

REV	DATE	DESCRIPTION	DWN BY	DES BY	CHK BY	APP BY

Diversified Engineering Inc.
CONSULTING ENGINEERS & SURVEYORS
175 RAY AVENUE, N.E.
NEW PHILADELPHIA, OH 44663
Phone: (330) 364-5831
Fax: (330) 343-4183
e-mail: dei@dei-eng.com
Web: www.dei-eng.com

WASTE MANAGEMENT

PROJECT: TRUCK MAINTENANCE FACILITY
GERMANTOWN, WI

SHEET TITLE: EROSION CONTROL PLAN
(PHASE III)

SHEET NO:
X2.2

JOB NO:
ENG-1465

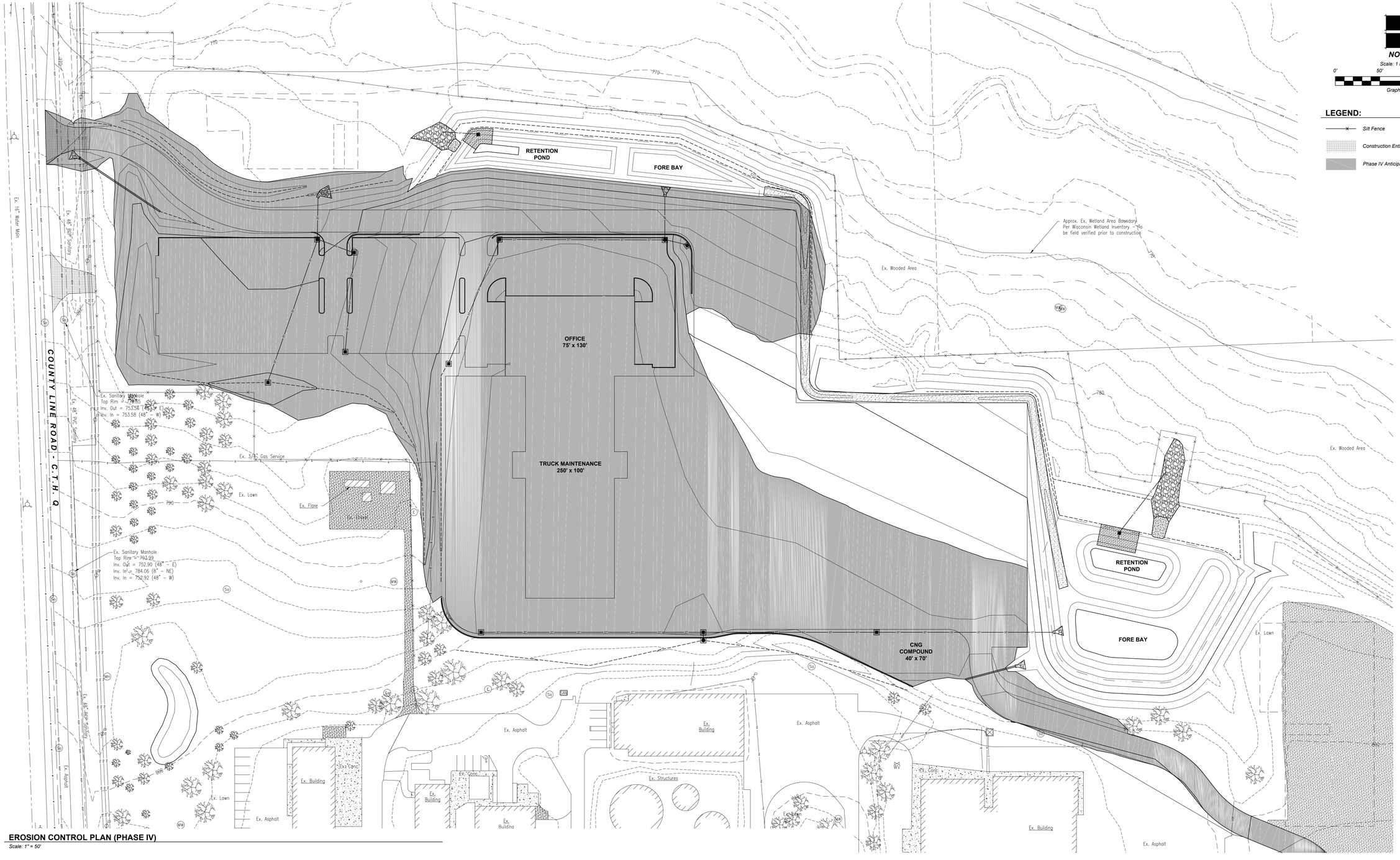

EROSION CONTROL PLAN (PHASE IV)

Scale: 1" = 50'

GENERAL NOTES:

A. *STREET SWEEPING: Streets directly adjacent to construction entrances and receiving traffic from the development area shall be cleaned daily to remove sediment tracked off-site.*

B. *INTERNAL INSPECTION AND MAINTENANCE: All controls on the development shall be inspected at least once every seven (7) calendar days and within 24 hours after any storm event greater than one-half (0.5) inch of rain per 24 hour period by the Owner.*

C. *SEEDING AND MULCHING: All disturbed areas shall be permanently seeded upon completion of grading activities.*

D. *All erosion and sediment control BMPs shown on plan are for reference and are to be field verified as required to meet, at minimum, all local, state, and federal regulations governing such operations.*

EROSION AND SEDIMENT CONTROL BASIC PRINCIPLES:

1. *Minimize open area by phasing or sequencing construction and preserving existing vegetation where possible.*
2. *Divert storm water away from disturbed or exposed areas when possible.*
3. *Install BMPs to control erosion and sediment and manage storm water.*
4. *Inspect the site regularly and properly maintain BMPs, especially after rainstorms.*
5. *Revise the plan as site conditions change during construction and improve the plans if BMPs are not effectively controlling erosion and sediment.*
6. *Keep the construction site clean by putting trash in trash cans, keeping storage bins covered, and preventing or removing excess sediment on roads and other impervious surfaces.*

CONSTRUCTION SEQUENCING NOTES (PHASE IV):

1. *Complete remaining ditches / berms and install storm water structures.*
2. *Grade building pad and install retaining walls.*
3. *Re-spread topsoil on completed slopes and seed and straw.*

ISSUE DATE	03/01/2019	SCALE	1" = 50'
SURVEYED BY		CHECKED BY	
DRAWN BY	COM / DSW	APPROVED BY	
REV	DATE	DESCRIPTION	DWN BY / DES BY / CHK BY / APP BY

CTR INT: 2'
KJB
MJB

Diversified Engineering Inc.
CONSULTING ENGINEERS & SURVEYORS
175 RAY AVENUE, N.E.
NEW PHILADELPHIA, OH 44663
Phone: (330) 364-5533
Fax: (330) 364-5533
e-mail: dei@dei-eng.com
Web: www.dei-eng.com

WASTE MANAGEMENT

PROJECT: *TRUCK MAINTENANCE FACILITY GERMANTOWN, WI*

SHEET TITLE: *EROSION CONTROL PLAN (PHASE IV)*

SHEET NO: **X2.3**

JOB NO: ENG-1465

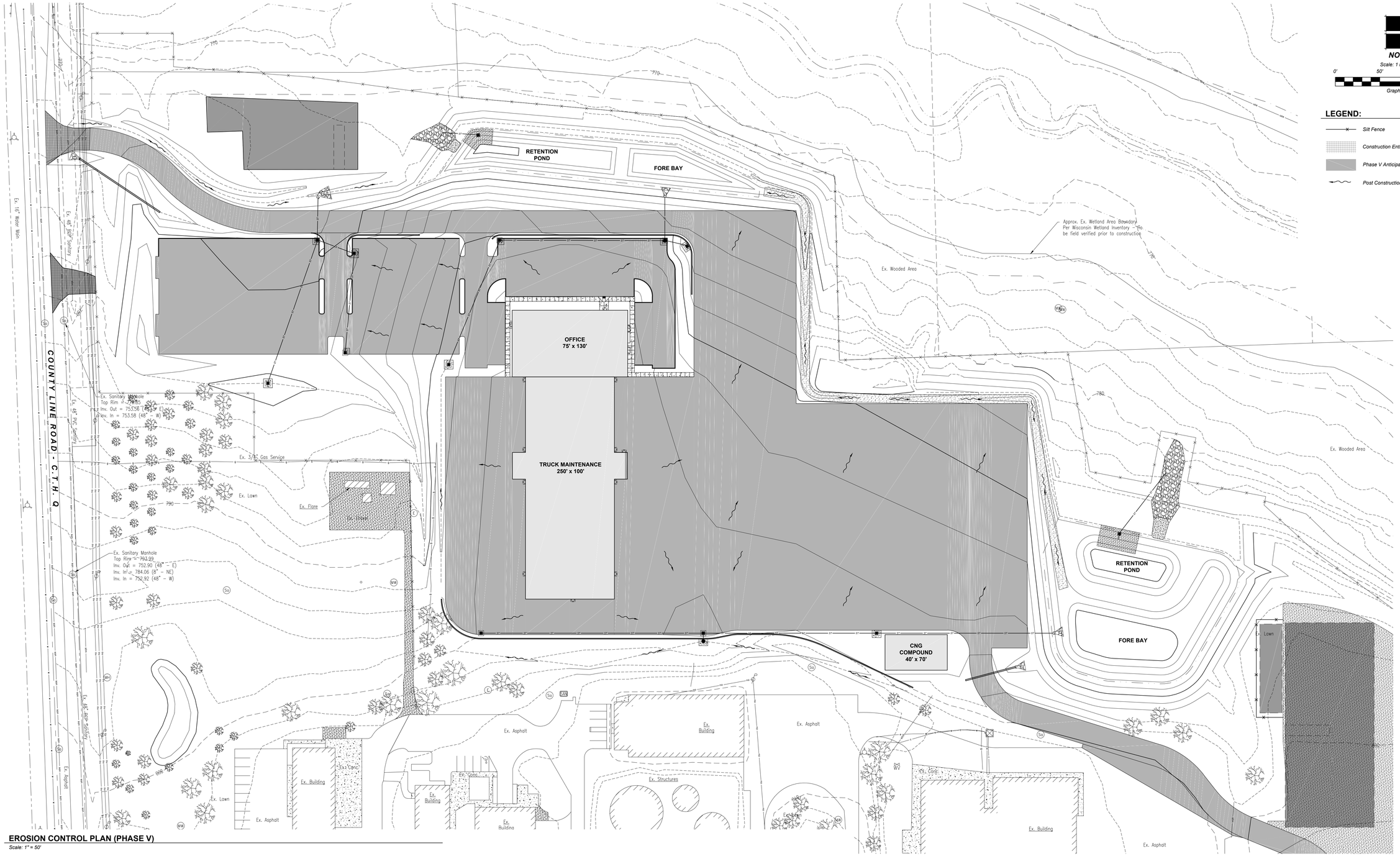

EROSION CONTROL PLAN (PHASE V)

Scale: 1" = 50'

GENERAL NOTES:

A. *STREET SWEEPING: Streets directly adjacent to construction entrances and receiving traffic from the development area shall be cleaned daily to remove sediment tracked off-site.*

B. *INTERNAL INSPECTION AND MAINTENANCE: All controls on the development shall be inspected at least once every seven (7) calendar days and within 24 hours after any storm event greater than one-half (0.5) inch of rain per 24 hour period by the Owner.*

C. *SEEDING AND MULCHING: All disturbed areas shall be permanently seeded upon completion of grading activities.*

D. *All erosion and sediment control BMPs shown on plan are for reference and are to be field verified as required to meet, at minimum, all local, state, and federal regulations governing such operations.*

EROSION AND SEDIMENT CONTROL BASIC PRINCIPLES:

1. *Minimize open area by phasing or sequencing construction and preserving existing vegetation where possible.*
2. *Divert storm water away from disturbed or exposed areas when possible.*
3. *Install BMPs to control erosion and sediment and manage storm water.*
4. *Inspect the site regularly and properly maintain BMPs, especially after rainstorms.*
5. *Revise the plan as site conditions change during construction and improve the plans if BMPs are not effectively controlling erosion and sediment.*
6. *Keep the construction site clean by putting trash in trash cans, keeping storage bins covered, and preventing or removing excess sediment on roads and other impervious surfaces.*

CONSTRUCTION SEQUENCING NOTES (PHASE V):

1. *Building Construction.*
2. *Final grading and hard surfacing.*
3. *Complete topsoil re-spread on remaining slopes and seed and straw.*
4. *Reclaim staging areas and east construction entrance.*

REV	DATE	DESCRIPTION	DWN BY	DES BY	CHK BY	APP BY

ISSUE DATE: 03/01/2019 SCALE: 1" = 50' CTR INT.: 2'
SURVEYED BY: CGM CHECKED BY: NJB
DRAWN BY: DSW APPROVED BY: MJB

Diversified Engineering Inc.
CONSULTING ENGINEERS & SURVEYORS
175 RAY AVENUE, N.E.
NEW PHILADELPHIA, OH 44663
Phone: (330) 364-5531
Fax: (330) 364-5533
e-mail: diei@de-eng.com
Web: www.de-eng.com

WASTE MANAGEMENT

PROJECT: *TRUCK MAINTENANCE FACILITY GERMANTOWN, WI*

SHEET TITLE: *EROSION CONTROL PLAN (PHASE V)*

SHEET NO: **X2.4**

JOB NO: ENG-1465

1 East Exterior Elevation
3/32" = 1'-0"

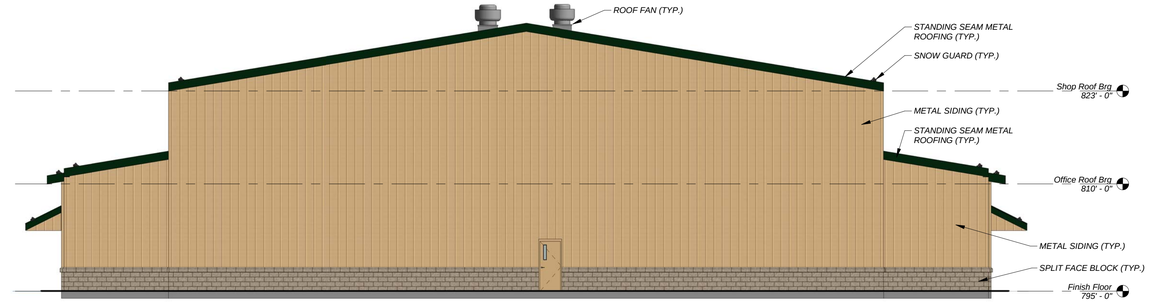

2 West Exterior Elevation
1" = 10'-0"

3 North Exterior Elevation
3/32" = 1'-0"

4 South Exterior Elevation
3/32" = 1'-0"

C:\Users\Dave\AutoDesk\Documents\WM-Germantown WI-Conceptual_Central Model_brian@div-eng.com.rvt

ISSUE DATE	02/28/19	SCALE	As indicated	CTR INT.	
SURVEYED BY	N/A	CHECKED BY	BWS		
DRAWN BY	CRM	APPROVED BY	NJB		

REV	DATE	DESCRIPTION	DWN BY	DES BY	CHK BY	APP BY

Diversified Engineering Inc.
CONSULTING ENGINEERS & SURVEYORS
175 RAY AVENUE, N.E
NEW PHILADELPHIA, OH 44663
Phone: (330) 364-1631
Fax: (330) 364-4031
e-mail: dei@div-eng.com
Web: www.div-eng.com

WASTE MANAGEMENT

PROJECT: TRUCK MAINTENANCE FACILITY GERMANTOWN, WI

SHEET TITLE: EXTERIOR ELEVATIONS

SHEET NO: A1.0

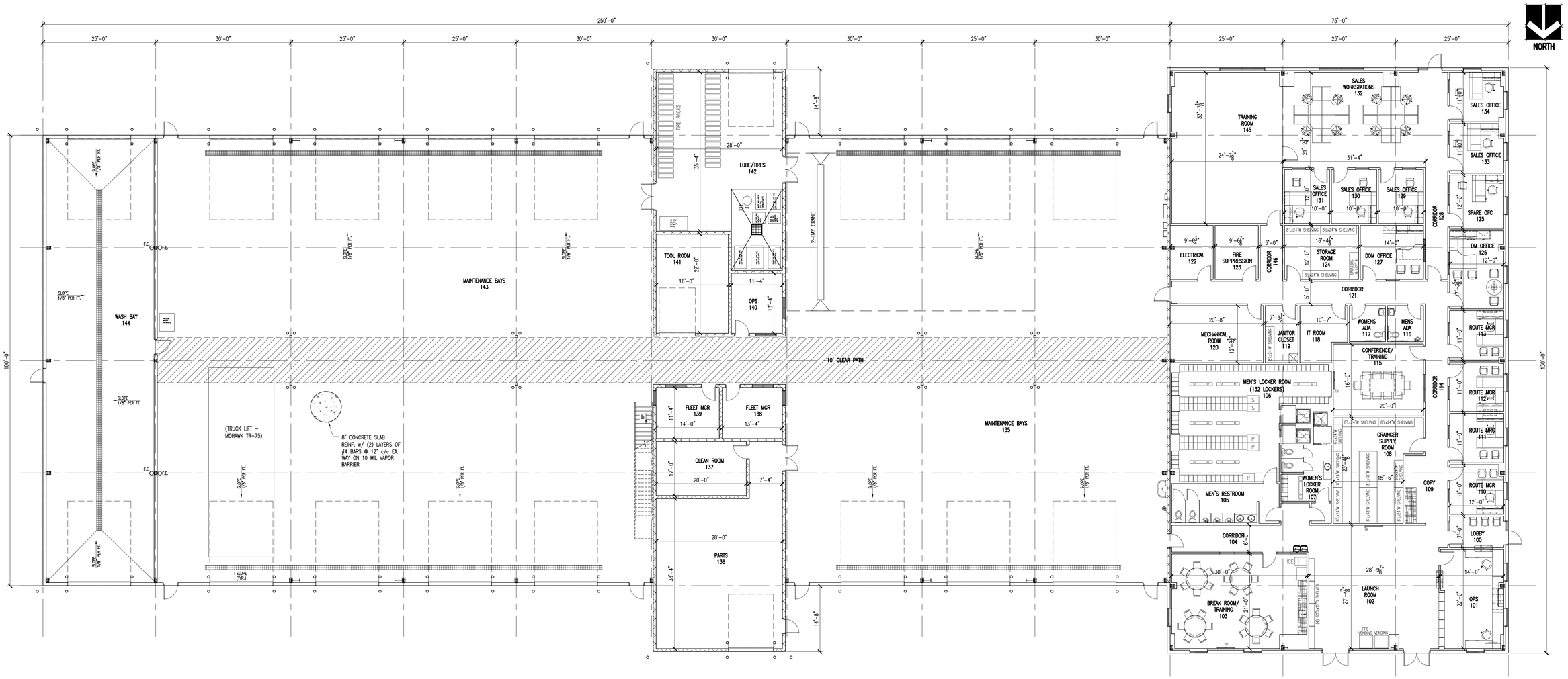

CONCEPTUAL OVERALL FLOOR PLAN (OPTION #1)
SCALE: 3/32" = 1' -0"

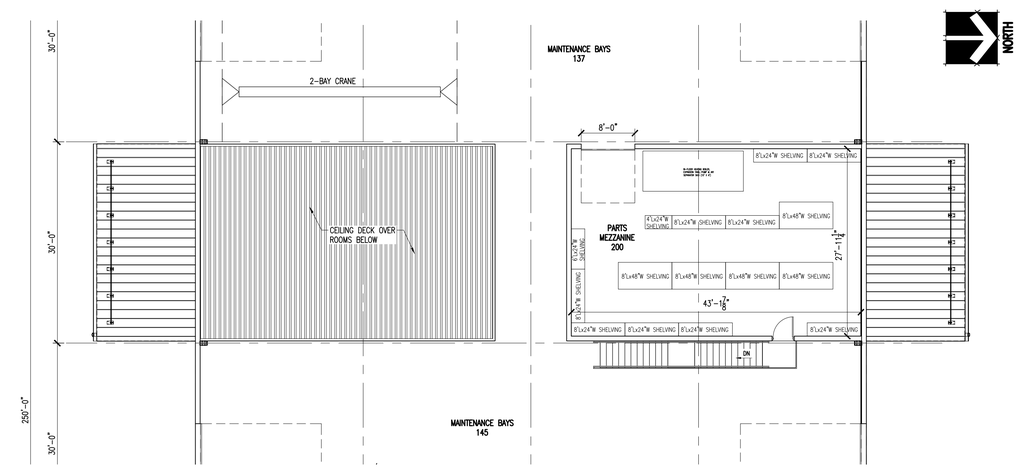

CONCEPTUAL SHOP MEZZANINE FLOOR PLAN (OPTION #1)
SCALE: 3/32" = 1' -0"

SQUARE FOOTAGE TABULATION

OVERALL SQUARE FOOTAGE (GROSS)

OFFICE/ADMINISTRATION	=	9,750 SF
MAINTENANCE SHOP/WASH BAY	=	25,715 SF
TOTAL	=	35,465 SF

SQUARE FOOTAGE BY ROOM (NET)

ROOM ID:	SQ. FOOTAGE:	ROOM ID:	SQ. FOOTAGE:
100	84	124	196
101	293	125	144
102	793	126	208
103	610	127	168
104	182	128	129
105	207	129	120
106	186	130	120
107	186	131	120
108	400	132	645
109	68	133	128
110	132	134	128
111	132	135	8,347
112	132	136	952
113	132	137	240
114	244	138	151
115	320	139	159
116	64	140	151
117	64	141	352
118	118	142	1,087
119	93	143	10,842
120	263	144	2,360
121	306	145	820
122	114	146	62
123	114	200	1,206

ISSUE DATE 3/01/2019 SCALE 3/32" = 1'-0" CTR INT. --
SURVEYED BY — CHECKED BY NJB
DRAWN BY CRM APPROVED BY NJB

REV	DATE	DESCRIPTION	DWN BY	DES BY	CHK BY	APP BY

Diversified Engineering Inc.
CONSULTING ENGINEERS & SURVEYORS
175 RAY AVENUE, N.E
NEW PHILADELPHIA, OH 44663
Phone: (330) 364-1631
Fax: (330) 364-4031
e-mail: dei@div-eng.com
Web: www.div-eng.com

WASTE MANAGEMENT

PROJECT: TRUCK MAINTENANCE FACILITY GERMANTOWN, WI

SHEET TITLE: CONCEPTUAL FLOOR PLAN

SHEET NO: A1.1

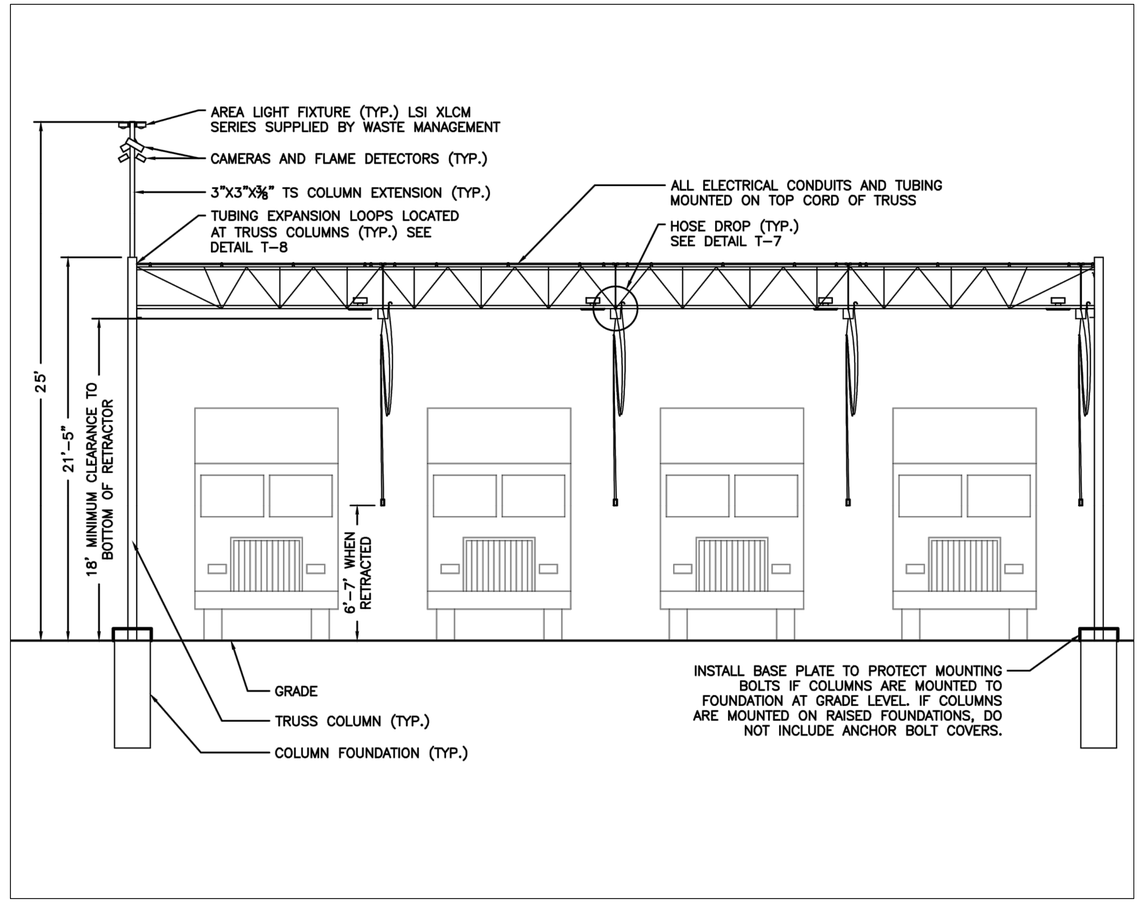

TYPICAL CNG TRUSS

DETAIL 1 / A1.2

SCALE: NOT TO SCALE

ISSUE DATE	03/01/2019	SCALE	1" = 50'
SURVEYED BY		CTR INT.	2'
DRAWN BY	COM	CHECKED BY	KJB
	DSW	APPROVED BY	AJB

REV	DATE	DESCRIPTION	DWN BY	DES BY	CHK BY	APP BY

Diversified Engineering Inc.
CONSULTING ENGINEERS & SURVEYORS
175 RAY AVENUE, N.E.
NEW PHILADELPHIA, OH 44663
Phone: (330) 364-5531
Fax: (330) 364-5531
e-mail: deiohio@verizon.net
Web: www.deiohio.com

WASTE MANAGEMENT

PROJECT: TRUCK MAINTENANCE FACILITY
GERMANTOWN, WI

SHEET TITLE: CNG TRUSS STRUCTURE TYPICAL DETAIL

SHEET NO: **A1.2**

JOB NO: ENG-1465

Catalog # :	Project :
Prepared By :	Date :

Slice Medium - SLM
Outdoor LED Area Light

The Slice's sleek design makes it perfectly-suited for Commercial & Industrial applications, while its cost-effective die-cast aluminum housing makes its acquisition cost very competitive. The Slice offers high performance silicone optics, die cast aluminum housing, 42,000+ lumens and is available with integral Airlink Synapse controls.

Features & Specifications

Optical System

- State-of-the-Art one piece silicone optic sheet delivers industry leading optical control with an integrated gasket to provide IP66 rated sealed optical chamber in 1 component.
- Proprietary silicone refractor optics provide exceptional coverage and uniformity in IES Types 2, 3, 5W, FT and FTA.
- Silicone optical material does not yellow or crack with age and provides a typical light transmittance of 93%.
- Zero uplight.
- Available in 5000K, 4000K, 3000K, and 2700K color temperatures per ANSI C78.377. Also Available in Phosphor Converted Amber with Peak intensity at 610nm.
- Minimum CRI of 70.
- Integral Louver (IL) option available for improved back-light control without sacrificing street side performance. See page 5 for more details.

Electrical

- High-performance driver features over-voltage, under-voltage, short-circuit and over temperature protection.
- 0-10V dimming (10% - 100%) standard.
- Standard Universal Voltage (120-277 Vac) Input 50/60 Hz or optional High Voltage (347-480 Vac).
- L80 Calculated Life: >100k Hours (See Lumen Maintenance on Page 3)
- Total harmonic distortion: <20%
- Operating temperature: -40°C to +50°C (-40°F to +122°F). 42L lumen package rated to +40°C.
- Power factor: >.90
- Input power stays constant over life.
- Field replaceable surge protection device meets a minimum Category C Low operation (per ANSI/IEEE C62.41.2).
- High-efficacy LEDs mounted to metal-core circuit board to maximize heat dissipation
- Terminal block provided accepts up to 10ga wire.
- Components are fully encased in potting material for moisture resistance. Driver complies with FCC standards. Driver and key electronic components can easily be accessed.

Dimmable | WIRELESS CONTROLS | IP66 | RoHS COMPLIANT | ARRA Funding Compliant | c UL us LISTED | USA | TITLE 24 COMPLIANT | ida DARK SKY APPROVED | DLC QPL LISTED | DLC QPL LISTED PREMIUM

Product Dimensions

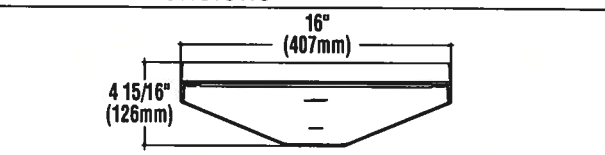

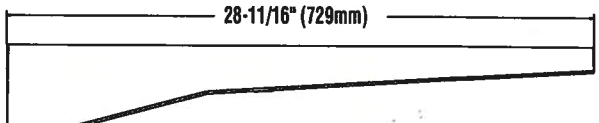

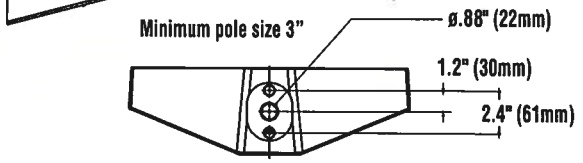

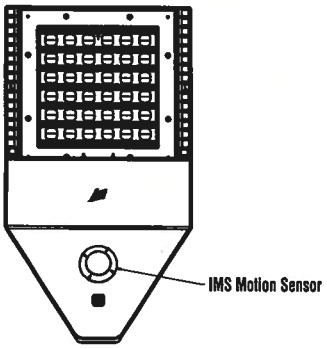

Bottom View

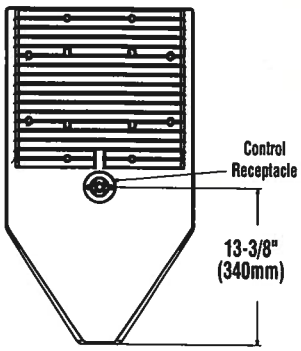

Top View

 ©LSI Industries Inc. All Rights Reserved.

Slice Medium - SLM
Outdoor LED Area Light

Features & Specifications (Cont.)

Construction

- Rugged die-cast aluminum housing contains factory prewired driver and optical unit. Cast aluminum wiring access door located underneath.
- Designed to mount to square poles.
- Luminaire is proudly manufactured in the U.S.of U.S. and imported parts.
- IP66 rated luminaire protects integral components from harsh environments.
- 3G rated for ANSI C136.31 high vibration applications
- Fixtures are finished with LSI's DuraGrip® polyester powder coat finishing process. The DuraGrip finish withstands extreme weather changes without cracking or peeling. Other standard LSI finishes available. Consult factory.
- Shipping weight: 30 lbs in carton.

Controls

Wireless Controls System

To make this fixture AirLink ready, simply order one of the following options:

a. The integrated Wireless Lighting Controller: ALSC or ALSCH (see ordering guide) as the controls option, or

b. Integrated Wireless Controller option (above) with integrated motion sensor: ALSCS (ordering guide for mounting heights) or

c. The 7-Pin Photoelectric Control Receptacle: CR7P as the controls option; and either the 5-Pin or 7-Pin Twist Lock Controller: ALSC UNV TL5 or ALSC UNV TL7 as an accessory

To see how the components of AirLink system work together, reference the diagram in the controls section of this specsheet. For more information on our AirLink products, visit our website: www.lsi-airlink.com/airlink-synapse/

Stand-Alone Controls

- The integral passive infrared motion sensor (IMS) activates switching of luminaire light levels (see the controls section for more details).
- The 7-pin ANSI C136.41-2013 photocontrol receptacle option (CR7P) is available for twist lock photocontrols or wireless control modules.
- The Button Type Photocells (PCI) are capable of switching luminaires ON/OFF in response to the amount of available daylight.

Installation

- A single fastener secures the hinged door, underneath the housing and provides quick & easy access to the electrical compartment for installing/servicing.
- Included terminal block provides quick and easy on-site wiring.
- Utilizes LSI's traditional 3" drill pattern for easy fastening of LSI products. (See drawing on page 1)

Warranty

- LSI LED Fixtures carry a 5-year warranty.

Listings

- Listed to UL 1598 and UL 8750.
- RoHS Compliant.
- American Recovery and Reinvestment Act Funding Compliant.
- IDA compliant; with 3000K color temperature selection.
- Title 24 Compliant; see local ordinance for qualification information.
- Suitable For wet Locations.
- IP66 rated Luminaire. IP66 rated optical chamber.
- 3G rated for ANSI C136.31 high vibration applications

Performance

ELECTRICAL DATA (AMPS)*

Lumens	Watts	120V	208V	240V	277V	347V	480V
9L	68.2	0.6A	0.3A	0.3A	0.2A	0.2A	0.1A
12L	93.1	0.8A	0.4A	0.4A	0.3A	0.3A	0.2A
18L	148.5	1.2A	0.7A	0.6A	0.5A	0.4A	0.3A
24L	188.8	1.6A	0.9A	0.8A	0.7A	0.5A	0.4A
30L	248.6	2.1A	1.2A	1.0A	0.9A	0.7A	0.5A
36L	317.8	2.6A	1.5A	1.3A	1.1A	0.9A	0.7A
42L	393.4	3.3A	1.9A	1.6A	1.4A	1.1A	0.8A

*Electrical data at 25C (77F). Actual wattage may differ by +/-10%

ELECTRICAL DATA - PHOSPHOR CONVERTED AMBER (AMPS)*

Lumens	Watts	120V	208V	240V	277V	347V	480V
9L	74.3	0.6A	0.4A	0.3A	0.3A	0.2A	0.2A
12L	102.9	0.9A	0.5A	0.4A	0.4A	0.3A	0.2A

*Electrical data at 25C (77F). Actual wattage may differ by +/-10%

RECOMMENDED LUMEN MAINTENANCE[1](24-42L)

Ambient	Initial[2]	25 hr[2]	50 hr[2]	75 hr[3]	100 hr[3]
0-40 C	100%	100%	97%	94%	92%

RECOMMENDED LUMEN MAINTENANCE[1](9-18L)

Ambient	Initial[2]	25 hr[2]	50 hr[2]	75 hr[3]	100 hr[3]
0-50 C	100%	96%	91%	87%	83%

1- Lumen maintenance values at 25C are calculated per TM-21 based on LM-80 data and in-situ testing.
2- In accordance with IESNA TM-21-11, Projected Values represent interpolated value based on time durations that are within six times the IESNA LM-80-08 total test duration for the device under testing.
3- In accordance with IESNA TM-21-11, Calculated Values represent time durations that exceed six times the IESNA LM-80-08 total test duration for the device under testing

DELIVERED LUMENS*

Lumen Package	Distribution	Phosphor Converted Amber (Peak 610nm)			Wattage
		Delivered Lumens	Efficacy	BUG Rating	
9L	2	5958	80	B2-U0-G1	74
	2 IL	3735	50	B0-U0-G1	
	3	6196	83	B1-U0-G1	
	3 IL	4205	56	B0-U0-G1	
	5W	5528	74	B3-U0-G1	
	FT	5922	79	B1-U0-G2	
	FT IL	3712	50	B0-U0-G1	
	FTA	5997	80	B2-U0-G2	
	FTA IL	4254	57	B0-U0-G1	
12L	2	7559	73	B2-U0-G2	103
	2 IL	4738	46	B0-U0-G1	
	3	7860	76	B2-U0-G2	
	3 IL	5335	52	B0-U0-G1	
	5W	7013	68	B3-U0-G2	
	FT	7513	73	B2-U0-G2	
	FT IL	4709	46	B0-U0-G2	
	FTA	7608	74	B2-U0-G2	
	FTA IL	5397	52	B0-U0-G1	

*LED Chips are frequently updated therefore values are nominal

LUMINAIRE EPA CHART - SLM

Tilt Degree		0°	30°	45°	Tilt Degree		0°	30°	45°
	Single	0.5	2.1	2.6		T90°	1.2	2.9	3.6
	D180°	1.1	2.1	2.6		TN120°	1.3	4.4	5.4
	D90°	0.9	2.5	3.1		Q90°	1.2	2.9	3.6

Specifications and dimensions subject to change without notice.

 ©LSI Industries Inc. All Rights Reserved.

Slice Medium - SLM
Outdoor LED Area Light

DELIVERED LUMENS*

Lumen Package	Distribution	CRI	2700K CCT			3000K CCT			4000K CCT			5000K CCT			Wattage
			Delivered Lumens	Efficacy	BUG Rating	Delivered Lumens	Efficacy	BUG Rating	Delivered Lumens	Efficacy	BUG Rating	Delivered Lumens	Efficacy	BUG Rating	
9L	2	70	8349	122	B2-U0-G2	8576	125	B2-U0-G2	9396	137	B2-U0-G2	9784	143	B2-U0-G2	69
	2 IL	70	5185	76	B0-U0-G1	5326	78	B0-U0-G1	5835	85	B0-U0-G1	6076	89	B0-U0-G1	
	3	70	8571	125	B1-U0-G2	8804	129	B1-U0-G2	9646	141	B2-U0-G2	10044	147	B2-U0-G2	
	3 IL	70	6283	92	B0-U0-G2	6454	94	B0-U0-G2	7071	103	B0-U0-G2	7363	107	B0-U0-G2	
	5W	70	8158	119	B3-U0-G2	8380	122	B3-U0-G2	9181	134	B3-U0-G2	9560	140	B4-U0-G2	
	FT	70	8337	122	B2-U0-G2	8563	125	B2-U0-G2	9382	137	B2-U0-G2	9769	143	B2-U0-G2	
	FT IL	70	5393	79	B0-U0-G2	5540	81	B0-U0-G2	6069	89	B0-U0-G2	6320	92	B0-U0-G2	
	FTA	70	8459	123	B2-U0-G2	8689	127	B2-U0-G2	9520	139	B2-U0-G2	9913	145	B2-U0-G2	
	FTA IL	70	6200	91	B1-U0-G1	6369	93	B1-U0-G1	6978	102	B1-U0-G1	7266	106	B1-U0-G1	
12L	2	70	11157	119	B2-U0-G2	11461	122	B2-U0-G2	12556	134	B3-U0-G2	13075	139	B3-U0-G2	94
	2 IL	70	6929	74	B1-U0-G1	7117	76	B1-U0-G2	7798	83	B1-U0-G2	8119	86	B1-U0-G2	
	3	70	11454	122	B2-U0-G2	11766	125	B2-U0-G2	12890	137	B2-U0-G2	13423	143	B2-U0-G2	
	3 IL	70	8396	89	B0-U0-G2	8625	92	B0-U0-G2	9449	101	B0-U0-G2	9839	105	B0-U0-G2	
	5W	70	10902	116	B4-U0-G2	11199	119	B4-U0-G2	12269	131	B4-U0-G2	12775	136	B4-U0-G2	
	FT	70	11141	119	B2-U0-G2	11444	122	B2-U0-G2	12538	133	B2-U0-G3	13055	139	B2-U0-G3	
	FT IL	70	7207	77	B0-U0-G2	7403	79	B0-U0-G2	8110	86	B0-U0-G2	8445	90	B0-U0-G2	
	FTA	70	11304	120	B2-U0-G2	11612	124	B2-U0-G2	12722	135	B2-U0-G2	13247	141	B2-U0-G2	
	FTA IL	70	8286	88	B1-U0-G1	8511	91	B1-U0-G1	9325	99	B1-U0-G1	9710	103	B1-U0-G1	
18L	2	70	16714	112	B3-U0-G3	17168	115	B3-U0-G3	18809	126	B3-U0-G3	19586	131	B3-U0-G3	150
	2 IL	70	10379	69	B1-U0-G2	10662	71	B1-U0-G2	11681	78	B1-U0-G2	12163	81	B1-U0-G2	
	3	70	17158	115	B2-U0-G3	17625	118	B2-U0-G3	19310	129	B3-U0-G3	20107	134	B3-U0-G3	
	3 IL	70	12578	84	B1-U0-G3	12920	86	B1-U0-G3	14155	95	B1-U0-G3	14739	99	B1-U0-G3	
	5W	70	16331	109	B4-U0-G2	16776	112	B4-U0-G2	18379	123	B4-U0-G2	19138	128	B5-U0-G3	
	FT	70	16689	112	B3-U0-G3	17143	115	B3-U0-G3	18781	126	B3-U0-G4	19557	131	B3-U0-G4	
	FT IL	70	10795	72	B1-U0-G2	11089	74	B1-U0-G2	12149	81	B1-U0-G3	12651	85	B1-U0-G3	
	FTA	70	16934	113	B3-U0-G3	17395	116	B3-U0-G3	19058	127	B3-U0-G3	19844	133	B3-U0-G3	
	FTA IL	70	12412	83	B1-U0-G1	12750	85	B1-U0-G2	13969	93	B1-U0-G2	14546	97	B1-U0-G2	
24L	2	70	20880	112	B3-U0-G3	22701	121	B4-U0-G3	24276	130	B4-U0-G3	24784	133	B4-U0-G3	187
	2 IL	70	13100	70	B1-U0-G2	14243	76	B1-U0-G2	15231	81	B1-U0-G2	15550	83	B1-U0-G2	
	3	70	21739	116	B3-U0-G3	23636	126	B3-U0-G4	25275	135	B3-U0-G4	25804	138	B3-U0-G4	
	3 IL	70	15828	85	B1-U0-G3	17209	92	B1-U0-G3	18403	98	B1-U0-G4	18788	100	B1-U0-G4	
	5W	70	20632	110	B5-U0-G3	22432	120	B5-U0-G3	23988	128	B5-U0-G3	24490	131	B5-U0-G3	
	FT	70	21611	116	B3-U0-G4	23496	126	B3-U0-G4	25126	134	B3-U0-G4	25652	137	B3-U0-G4	
	FT IL	70	13692	73	B1-U0-G3	14886	80	B1-U0-G3	15919	85	B1-U0-G3	16252	87	B1-U0-G3	
	FTA	70	21496	115	B3-U0-G3	23371	125	B3-U0-G3	24992	134	B3-U0-G3	25515	136	B3-U0-G3	
	FTA IL	70	15226	81	B1-U0-G2	16555	89	B1-U0-G2	17703	95	B2-U0-G2	18073	97	B2-U0-G2	
30L	2	70	26581	108	B4-U0-G3	28900	117	B4-U0-G3	30905	125	B4-U0-G3	31551	128	B4-U0-G3	247
	2 IL	70	16677	68	B1-U0-G2	18132	73	B1-U0-G2	19390	79	B1-U0-G2	19796	80	B1-U0-G2	
	3	70	27675	112	B3-U0-G4	30089	122	B3-U0-G4	32176	130	B3-U0-G4	32850	133	B3-U0-G4	
	3 IL	70	20150	82	B1-U0-G4	21908	89	B1-U0-G4	23428	95	B1-U0-G4	23918	97	B1-U0-G4	
	5W	70	26266	106	B5-U0-G3	28557	116	B5-U0-G3	30538	124	B5-U0-G4	31177	126	B5-U0-G4	
	FT	70	27512	111	B3-U0-G4	29912	121	B3-U0-G4	31987	130	B3-U0-G4	32656	132	B3-U0-G5	
	FT IL	70	17430	71	B1-U0-G3	18951	77	B1-U0-G4	20266	82	B1-U0-G4	20690	84	B1-U0-G4	
	FTA	70	27365	111	B3-U0-G3	29752	120	B4-U0-G3	31816	129	B4-U0-G3	32482	132	B4-U0-G3	
	FTA IL	70	19384	78	B2-U0-G2	21075	85	B2-U0-G2	22537	91	B2-U0-G2	23008	93	B2-U0-G2	
36L	2	70	32214	102	B4-U0-G3	35025	111	B4-U0-G3	37454	118	B4-U0-G3	38238	121	B4-U0-G4	317
	2 IL	70	20212	64	B1-U0-G2	21975	69	B1-U0-G3	23499	74	B2-U0-G3	23991	76	B2-U0-G3	
	3	70	33540	106	B3-U0-G4	36466	115	B3-U0-G5	38996	123	B3-U0-G5	39812	126	B3-U0-G5	
	3 IL	70	24421	77	B1-U0-G4	26551	84	B1-U0-G4	28393	90	B1-U0-G4	28987	92	B1-U0-G5	
	5W	70	31832	101	B5-U0-G4	34609	109	B5-U0-G4	37010	117	B5-U0-G4	37785	119	B5-U0-G4	
	FT	70	33342	105	B3-U0-G5	36251	114	B3-U0-G5	38766	122	B4-U0-G5	39577	125	B4-U0-G5	
	FT IL	70	21125	67	B1-U0-G4	22968	73	B1-U0-G4	24561	78	B1-U0-G4	25075	79	B1-U0-G4	
	FTA	70	33164	105	B4-U0-G3	36058	114	B4-U0-G4	38559	122	B4-U0-G4	39366	124	B4-U0-G3	
	FTA IL	70	23492	74	B2-U0-G2	25541	81	B2-U0-G2	27313	86	B2-U0-G2	27885	88	B2-U0-G2	
42L	2	70	36785	94	B4-U0-G3	39994	103	B5-U0-G4	42768	110	B5-U0-G4	43663	112	B5-U0-G4	390
	2 IL	70	23079	59	B1-U0-G3	25093	64	B2-U0-G3	26833	69	B2-U0-G3	27395	70	B2-U0-G3	
	3	70	38299	98	B3-U0-G5	41640	107	B4-U0-G5	44528	114	B4-U0-G5	45460	117	B4-U0-G5	
	3 IL	70	27886	72	B1-U0-G4	30319	78	B1-U0-G5	32422	83	B1-U0-G5	33100	85	B1-U0-G5	
	5W	70	36349	93	B5-U0-G4	39520	101	B5-U0-G4	42261	108	B5-U0-G4	43145	111	B5-U0-G4	
	FT	70	38073	98	B4-U0-G5	41395	106	B4-U0-G5	44266	114	B4-U0-G5	45192	116	B4-U0-G5	
	FT IL	70	24122	62	B1-U0-G4	26226	67	B1-U0-G4	28045	72	B1-U0-G4	28632	73	B1-U0-G4	
	FTA	70	37870	97	B4-U0-G4	41174	106	B4-U0-G4	44030	113	B4-U0-G4	44951	115	B4-U0-G4	
	FTA IL	70	26825	69	B2-U0-G2	29165	75	B2-U0-G2	31188	80	B2-U0-G2	31841	82	B2-U0-G2	

*LED Chips are frequently updated therefore values are nominal

Specifications and dimensions subject to change without notice.

 ©LSI Industries Inc. All Rights Reserved.

Performance (Cont.)

All published luminaire photometric testing performed to IESNA LM-79 standards. ISO footcandle plots below demonstrate the Slice (SLM) light patterns only. Not for total fixture output. For complete specifications and IES files, see website.

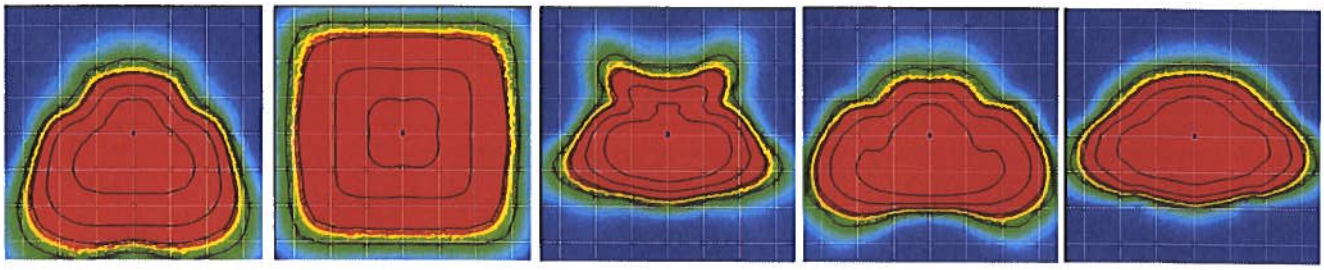

FT | 5W | FTA | Type 3 | Type 2

Ordering Guide

TYPICAL ORDER EXAMPLE: **SLM LED 36L SIL FTA UNV DIM 50 70CRI ALSCS04 BRZ IL**

Luminaire Prefix	Light Source	Lumen Package*	Light Output	Distribution	Orientation[1]	Voltage	Driver
SLM Slice Medium	**LED**	**9L** - 9,000 lms **12L** - 12,000 lms **18L** - 18,000 lms **24L** - 24,000 lms **30L** - 30,000 lms **36L** - 36,000 lms **42L** - 42,000 lms *Consult factory for programmable wattages and lumen packages	**SIL** - Silicone	**2** - Type 2 **3** - Type 3 **5W** - Type 5 Wide **FT** - Forward Throw **FTA** - Forward Throw Automotive	**(blank)** - standard **L**- Optics rotated left 90 **R** - Optics rotated right 90	**UNV** - Universal Voltage (120-277V) **HV** - High Voltage (347-480V)	**DIM** - 0-10V Dimming (0-10%)

Color Temp	Color Rendering	Controls (Choose One)	Finish	Options
50 - 5,000 CCT **40** - 4,000 CCT **30** - 3,000 CCT[2] **27** - 2,700 CCT[2] **AMB** - Phosphor Converted Amber[2,3]	**70CRI** - 70 CRI	**(Blank) - None** **Wireless Controls System** **ALSC** - AirLink Synapse Control System [4] **ALSCH** - AirLink Synapse Control System Host / Satelite [4,5] **ALSCS01** - AirLink Synapse Control System with 8-12' Motion Sensor [4] **ALSCHS01** - AirLink Synapse Control System Host / Satelite with 8-12' Motion Sensor [4,5] **ALSCS02** - AirLink Synapse Control System with 12-20' Motion Sensor[4] **ALSCHS02** - AirLink Synapse Control System Host / Satelite with 12-20' Motion Sensor [4,5] **ALSCS04** - AirLink Synapse Control System with 20-40' Motion Sensor [4] **ALSCHS04** - AirLink Synapse Control System Host / Satelite with 20-40' Motion Sensor [4,5] **Stand-Alone Controls** **EXT** - 0-10v Dimming (from external signal) **IMSOM1** - Integral Motion Sensor 8-12' 120-277V [4,6] **IMSOM2** - Integral Motion Sensor 12-20' 120-277V [4,6] **IMSOM4** - Integral Motion Sensor 20-40' 120-277V [4,6] **IMSOM1HV** - Integral Motion Sensor 8-12' 347-480V [6] **IMSOM2HV** - Integral Motion Sensor 12-20' 347-480V [6] **IMSOM4HV** - Integral Motion Sensor 20-40' 347-480V [6] **CR7P** - 7 Pin Control Receptacle ANSI C136.41 [7] **Button Type Photocells** **PCI120** - 120V **PCI208-277** - 208 -277V **PCI347** - 347V	**BRZ** - Bronze **BLK** - Black **GPT** - Graphite **MSV** - Metallic Silver **WHT** - White **PLP** - Platinum Plus **SVG** - Satin Verde Green	**(Blank) - None** **IL** - Integral Louver HSS[1]

 ©LSI Industries Inc. All Rights Reserved.

Accessory Ordering Information[8]

Description	Order Number	Description	Order Number
PC120 Photocell for use with CR7P option (120V)[9]	122514	DFK208, 240 Double Fusing (208V, 240V)	DFK240
PC208-277 Photocell for use with CR7P option (208V, 240V, 277V)[9]	122515	DFK480 Double Fusing (480V)	DFK480
PC347 Photocell for use with CR7P option (347V)[9]	122516	DFK347 Double Fusing (347V)	DFK347
PC480 Photocell for use with CR7P option (480V)[9]	1225180	X5RPP - Round Pole Adapter for 5" Poles[10]	379968CLR
ALSC UNV TL5 - Airlink 5Pin Twist Lock Controller[4,9]	661409	IL - Integral Louver HSS	684812
ALSC UNV TL7 - Airlink 7Pin Twist Lock Controller[4,9]	661410	Universal Mounting Bracket (UMB)[10]	684616CLR
PMOS24 - 24V Pole-Mount Occupancy Sensor (ALSC/H Compatible)[10]	663284CLR	Adjustable Slip Fitter (ASF)[10]	688138CLR
IMS/PC Remote Configurator Tool	584929	Pole Quick Mount Bracket - Square Pole[10]	687073CLR
X3RPP - Round Pole Adapter for 3" Round Tapered Poles[10]	408273CLR	Pole Quick Mount Bracket - 4-5" Round Pole[10]	689903CLR
X4RPP - Round Pole Adapter for 4" Poles[10]	379967CLR	15° Tilt Pole Quick Mount Bracket - Square Pole[10]	688003CLR
FK120 Single Fusing (120V)	FK120	15° Tilt Pole Quick Mount Bracket - 4-5" Round Pole[10]	689905CLR
FK277 Single Fusing (277V)	FK277	BKS XBO WM * CLR Wall Mount Bracket[10]	382132CLR

FOOTNOTES:
1 - Not available on "Type 5W" distribution.
2 - Consult Factory for availability.
3 - Only available in 9L and 12L Lumen Packages
4 - Not available in HV.
5 - Consult Factory for Site Layout
6 - IMS is field adjustable, via a hand held Remote Configurator Tool, which must be ordered separately. See Accessory Ordering Information.
7 - Control device must be ordered separately. 7 pin standard. See Accessory Ordering Information.
8 - Accessories are shipped seperately and field installed.
9 - Factory installed CR7P option required. See Options.
10 - "CLR" denotes finish. See Finish options.

Accessories/Options

Integral Louver (IL)

Accessory Integral Louver available for improved back-light control without sacrificing street side performance. LSI's Integral Louver (IL) option delivers backlight control that significantly reduces light spill behind the pole for applications with pole locations close to adjacent properties. The integrated louvers' design maximizes forward-reflected light while - reducing glare, maintaining the optical distribution selected, and most importantly, eliminating light trespass. The Integral louver rotates with the optical distribution.

Luminaire Shown with Integral Louver (IL)

7 Pin Photoelectric Control

7-pin ANSI C136.41-2013 control receptacle option available for twist lock photocontrols or wireless control modules. Control accessories sold separately. Dimming leads from the receptacle will be connected to the driver dimming leads (Consult factory for alternate wiring).

Fixture Shown with CR7P

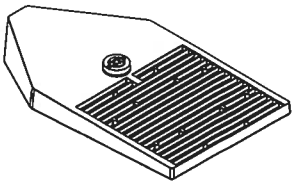

Optics Rotation

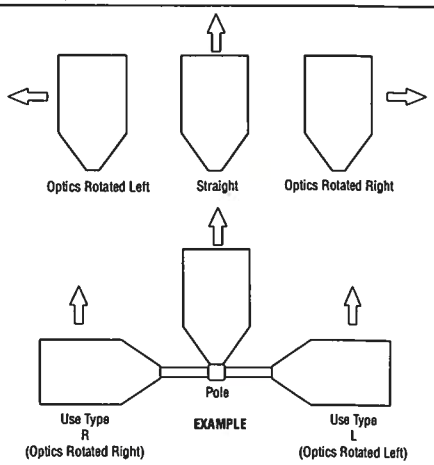

 ©LSI Industries Inc. All Rights Reserved.

Stand-alone Controls: Occupancy Sensor (IMS)

The integral passive infrared motion sensor activates switching of luminaire light levels. Standard Factory settings: High level light is activated and increased to full bright upon detection of motion. Lowlight level (10% maximum drive current) is activated when target zone is absent of motion activity for ~5 minutes. See coverage diagram for detection cone.

The Remote Configurator Tool allows for easy and safe programming of each luminaire from ground level.
See the Remote Configurator User Guide for programming instructions.

When ordering the Stand-alone Occupancy Sensor on the fixture, you must include IMS (see ordering guide for mounting height options) as the controls option in the fixture nomenclature.

To order as a motion sensor with the AirLink Wireless Control System, see ordering guide under "Wireless Controls System" and select the ALSCS controls option with the desired mounting height.

IMS Coverage Diagrams

TOP VIEW

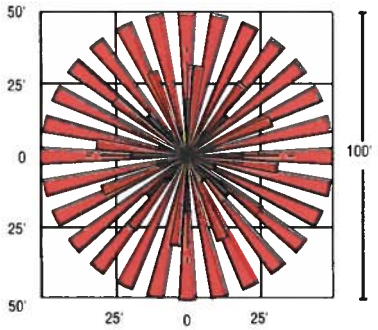

SIDE VIEW

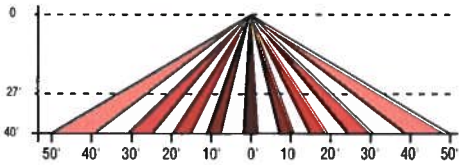

Remote Configurator Tool

Luminaire Shown with IMS

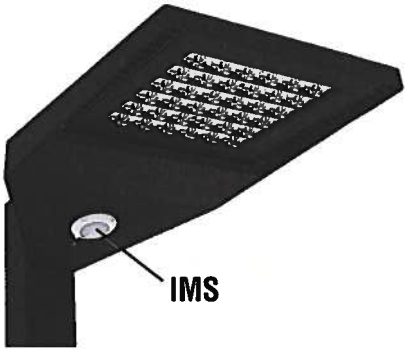

 ©LSI Industries Inc. All Rights Reserved.

Slice Medium - SLM
Outdoor LED Area Light

AirLink™
enabled by Synapse®

The AirLink enabled by Synapse Wireless Lighting Control System is the perfect solution for commercial, industrial and municipal applications, such as: auto dealerships, parking lots, garages, shopping complexes and warehouses.

AirLink utilizes robust wireless communication via 2.4 GHz Self-Healing Mesh Network which not only increases reliability and accuracy of system, but also eliminates single point of failure.

The flexibility of the system make it perfect for new construction and retrofit projects. The user-friendly AirLink web application is accessible through any device with an internet connection and allows for complete customization of the system's features.

Some capabilities of the system include: occupancy/vacancy sensing, daylight harvesting, scheduling, high-end trim, dimming, zone control, BMS integration and energy monitoring.

The AirLink System

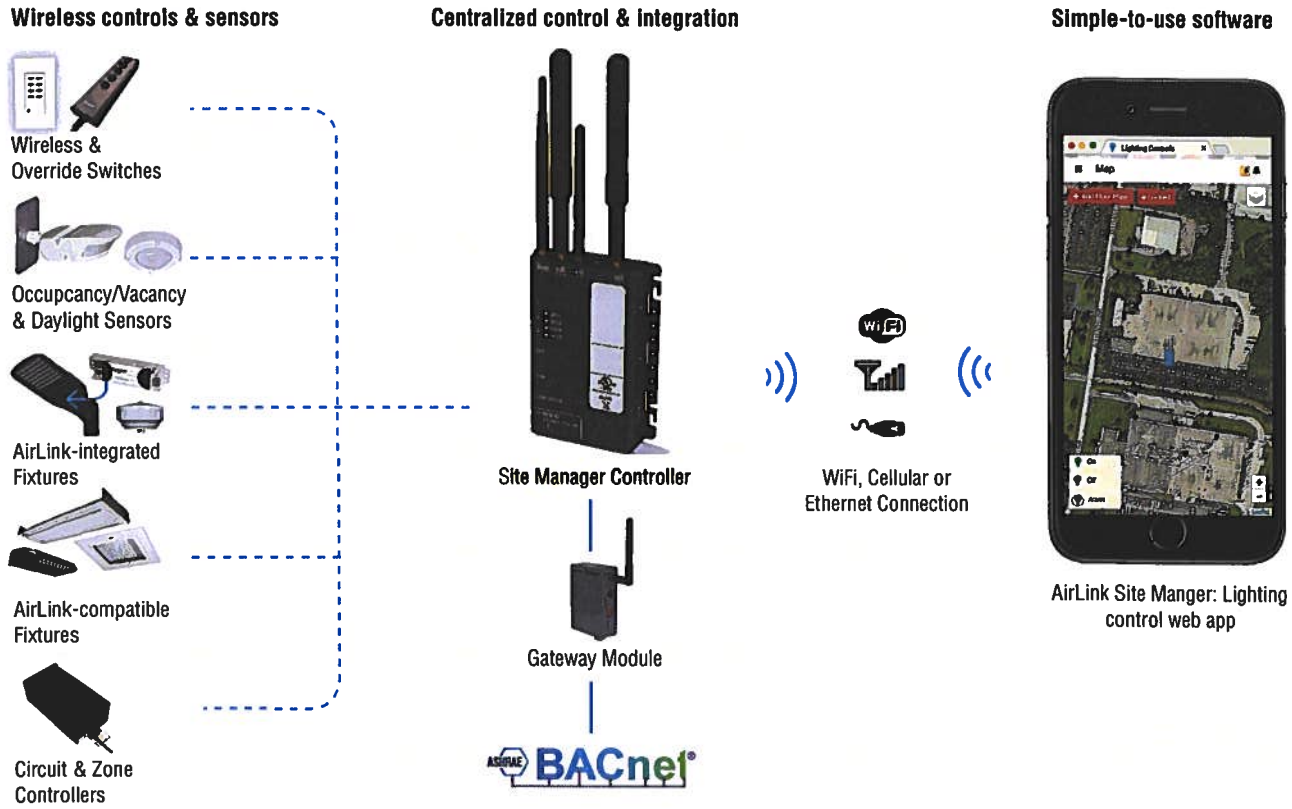

Contact LSI Controls

Sales
controls.sales@lsi-industries.com

Support
controls.support@lsi-industries.com
1 (800) 436-7800 (support, option 8)

More information
For more information on AirLink, visit our website at **www.lsi-airlink.com**

 ©LSI Industries Inc. All Rights Reserved.

poles & Brackets

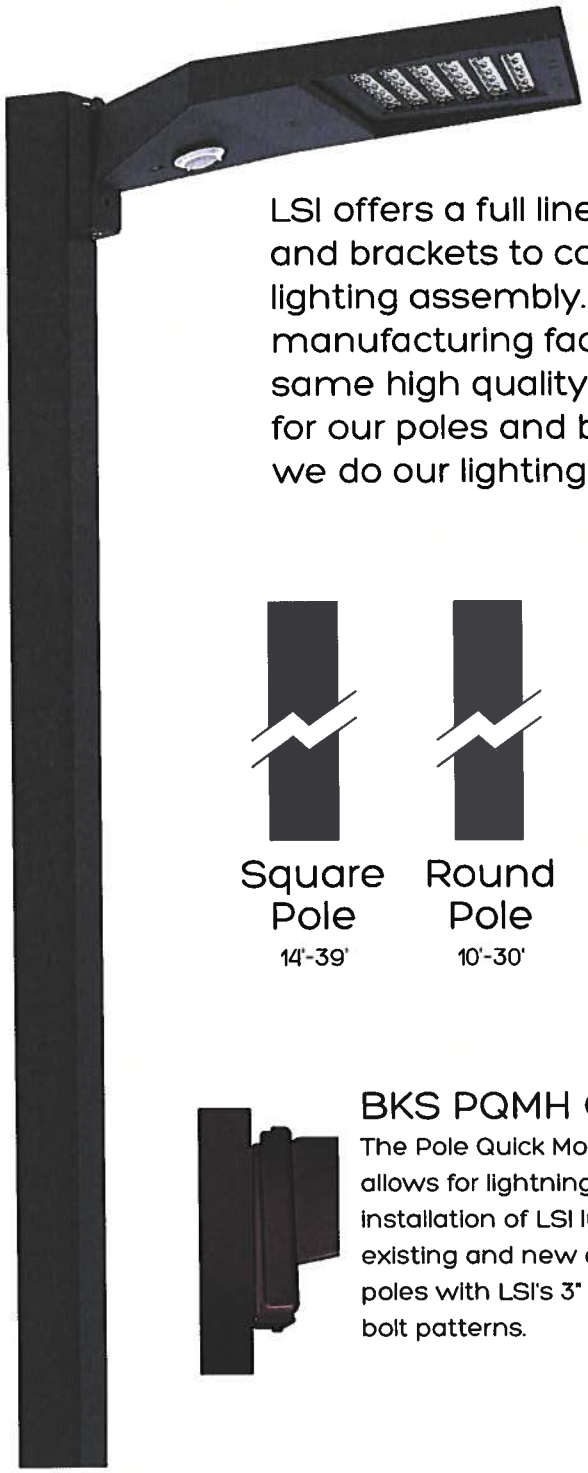

LSI offers a full line of poles and brackets to complete your lighting assembly. Our USA manufacturing facility has the same high quality standards for our poles and brackets as we do our lighting fixtures.

BKA UMB CLR

The 3G rated Universal Mounting Bracket (UMB) allows for seemless integration of LSI Luminaires onto existing or new construction poles. The UMB bracket was designed specifically for square or round (tapered/ straight) poles with (2) mounting hole spaces between 3.5"-5".

Square Pole 14'-39'

Round Pole 10'-30'

Tapered Pole 20'-39'

BKA ASF CLR

The adjustable Slip Fitter is a 3G rated rugged die cast aluminum adapter to mount LSI luminaires onto a 2" (51mm) IP, 2.375" (60mm) O.D. tenon. The Adjustable Slip Fitter can be rotated 180° allowing for tilting LSI luminaires up to 45° and 90° when using a vertical tenon.

BKS PQMH CLR

The Pole Quick Mount Bracket allows for lightning fast installation of LSI luminaires onto existing and new construction poles with LSI's 3" or 5"standard bolt patterns.

BKS PQM15 CLR

The Pole Quick Mount Bracket allows for preset 15° uptilt of LSI luminaires for greater throw of light and increased vertical illumination aswell as fast installation onto poles with LSI's 3" or 5" bolt pattern.

 ©LSI Industries Inc. All Rights Reserved.

WSQ LED

Architectural Wall Sconce

Inverted available with WLU option only.

Catalog Number	
Notes	
Type	Fixture SF

Hit the Tab key or mouse over the page to see all interactive elements.

Specifications

Luminaire

Height:	9-3/8" (23.8 cm)
Width:	18" (45.7 cm)
Depth:	9" (22.8 cm)
Weight:	17 lbs (7.7 kg)

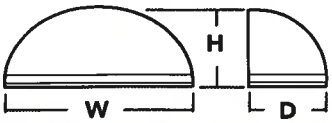

Optional Back Box (BBW)

Height:	4" (10.2 cm)
Width:	5-1/2" (14.0 cm)
Depth:	1-1/2" (3.8 cm)

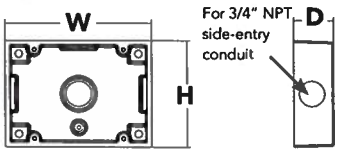

Introduction

Classic Architectural Wall Sconce with the LED technology. Long-life, maintenance-free product with typical energy savings of 80% compared to metal halide versions. The integral battery backup option provides emergency egress lighting, without the use of a back-box or remote gear, so installations maintain their aesthetic integrity. The WSQ LED is ideal for replacing existing 50 – 250W metal halide wall-mounted products. The expected service life is 20+ years of nighttime use.

Ordering Information

EXAMPLE: WSQ LED P2 40K SR3 MVOLT DDBTXD

WSQ LED	P2	50K	SR2	MVOLT			DDBXD
Series	**Performance Package**	**Color Temperature**	**Distribution**	**Voltage**	**Mounting**	**Options**	**Finish** *(required)*
WSQ LED	P1 P2 P3 P4	30K 40K 50K	SR2 Type II SR3 Type III SR4 Type IV	MVOLT[1] 120 208 240 277 347 480	**Shipped included** **(blank)** Surface mount **Shipped separately**[2] **BBW** Surface-mounted back box	**Shipped installed** PE Photoelectric cell, button type[2] SF Single fuse (120, 277, 347V)[3] DF Double fuse (208, 240, 480V)[3] DMG 0-10v dimming wires pulled outside fixture (for use with an external control, ordered separately) E20WC Emergency battery backup, CEC compliant (18W, -20°C)[4] E10WH Emergency battery backup, CEC compliant (10W, 5°C)[4] WLU Wet location door for up orientation[5] PIR Motion/ambient light sensor[6] DS Dual switching[7] SPD Separate Surge Protection[8] **Shipped separately** VG Vandal guard WG Wire guard	DDBXD Dark bronze DBLXD Black DNAXD Natural aluminum DWHXD White DSSXD Sandstone DDBTXD Textured dark bronze DBLBXD Textured black DNATXD Textured natural aluminum DWHGXD Textured white DSSTXD Textured sandstone

Emergency Battery Operation

The emergency battery backup (E20WC & E10WH options) is integral to the luminaire - no external housing required! This design provides reliable emergency operation while maintaining the aesthetics of the product.

All E20WC & E10WH configurations include an independent secondary driver with an integral relay to immediately detect AC power loss.

The emergency battery will power the luminaire for a minimum duration of 90 minutes (maximum duration of three hours) from the time supply power is lost, per International Building Code Section 1006 and NFPA 101 Life Safety Code Section 7.9, provided luminaires are mounted at an appropriate height and illuminate an open space with no major obstructions.

The examples below show illuminance of 1 fc average and 0.1 fc minimum of the P1 power package Type IV product in emergency mode.

WSR P1 LED 40K SR4 MVOLT E20WC
10' x 10' Gridlines
8' and 12' Mounting Height

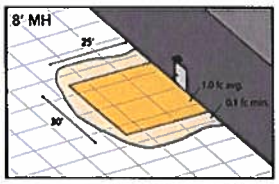

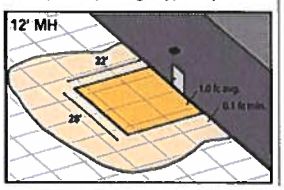

NOTES

1. MVOLT driver operates on any line voltage from 120-277V (50/60 Hz).
2. Not available with 480V option.
3. Single fuse (SF) requires 120V, 277V or 347V options. Double fuse (DF) requires 208V, 240V or 480V options,
4. Not available with 347V or 480V. Not available with WLU.
5. WLU not available with PIR, E20WC or E10WH.
6. See PIR Table for default settings.
7. Only available with P3 & P4 packages. Provides 50/50 luminaire operation via two independent drivers and light engines on two separate circuits. Not available with E20WC, E10WH, WLU, SF, or DF. When ordered with photocell (PE) or motion sensor (PIR), only the primary power source leads will be controlled.
8. See electrical section on page 2 for more details.

© 2011-2018 Acuity Brands Lighting, Inc. All rights reserved.

Performance Data

Lumen Output

Lumen values are from photometric tests performed in accordance with IESNA LM-79-08. Data is considered to be representative of the configurations shown, within the tolerances allowed by Lighting Facts.

Performance Package	System Watts (MVOLT[1])	Dist. Type	30K (3000K, 70CRI)		40K (4000K, 70CRI)		50K (5000K, 70CRI)	
			Lumens	LPW	Lumens	LPW	Lumens	LPW
P1	20W	SR2	2,111	108	2,251	115	2,305	118
		SR3	2,104	108	2,244	115	2,298	117
		SR4	2,053	105	2,189	112	2,242	115
P2	29W	SR2	2,943	101	3,139	108	3,214	110
		SR3	2,934	101	3,129	107	3,204	110
		SR4	2,863	98	3,053	105	3,126	107
P3	40W	SR2	4,500	114	4,799	122	4,913	125
		SR3	4,486	114	4,784	122	4,898	125
		SR4	4,377	111	4,667	119	4,779	122
P4	61W	SR2	6,159	102	6,567	108	6,724	111
		SR3	6,139	101	6,547	108	6,703	110
		SR4	5,991	99	6,388	105	6,541	108

Motion/Ambient Sensor Default Settings						
	Dimmed State	High Level (when triggered)	Phototcell Operation	Ramp-up Time	Dwell Time	Ramp-down Time
*PIR	3V (37%) Output	10V (100%) Output	Enabled @ 5FC	3 sec	5 min	5 min
*PIR USES SFOD 7						

Lumen Ambient Temperature (LAT) Multipliers

Use these factors to determine relative lumen output for average ambient temperatures from 0-40°C (32-104°F).

Ambient		Normalized Lumen Multiplier
0°C	32°F	1.05
10°C	50°F	1.03
20°C	68°F	1.01
25°C	**77°F**	**1.00**
30°C	86°F	0.99
40°C	104°F	0.97

Projected LED Lumen Maintenance

Data references the extrapolated performance projections for the **MRW LED P4** platform in a **25°C ambient**, based on 10,000 hours of LED testing (tested per IESNA LM-80-08 and projected per IESNA TM-21-11).

To calculate LLF, use the lumen maintenance factor that corresponds to the desired number of operating hours below. For other lumen maintenance values, contact factory.

Operating Hours	0	25000	50000	100000	L90
Lumen Maintenance Factor	1	0.96	0.95	0.92	>60000

Electrical Load

Power Package	System Watts	Current (A)					
		120V	208V	240V	277V	347V	480V
P1	20W	0.17	0.10	0.09	0.08	0.06	0.05
P2	29W	0.26	0.15	0.13	0.12	0.09	0.07
P3	40W	0.37	0.21	0.18	0.16	0.13	0.09
P4	61W	0.59	0.33	0.18	0.25	0.19	0.14

Photometric Diagrams

To see complete photometric reports or download .ies files for this product, visit Lithonia Lighting's WSQ LED homepage.

Isofootcandle plots for the WSQ LED P4 40K SR2, SR3, and SR4. Distances are in units of mounting height (12').

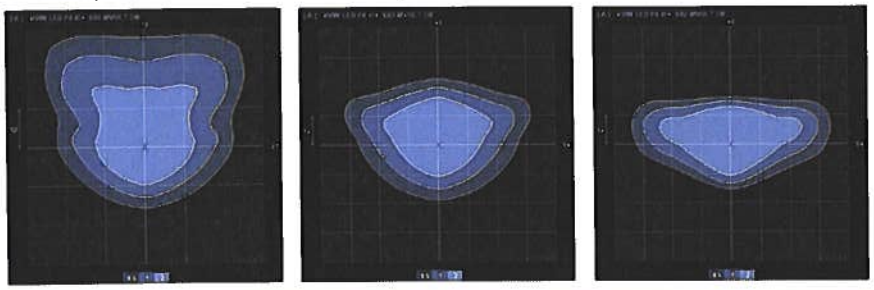

FEATURES & SPECIFICATIONS

INTENDED USE

The classic architectural shape of the WSQ LED was designed for applications such as hospitals, schools, malls, restaurants, and commercial buildings. The long life LEDs and driver make this luminaire nearly maintenance-free.

CONSTRUCTION

The die-cast aluminum housing integrates secondary heat sinks to optimize thermal transfer from the internal light engine heat sinks and promote long life. The driver is mounted in direct contact with the casting for a low operating temperature and long life. The die-cast door frame is fully gasketed with a one-piece solid silicone gasket to keep out moisture and dust, providing an IP65 rating for the luminaire.

FINISH

Exterior parts are protected by a zinc-infused Super Durable TGIC thermoset powder coat finish that provides superior resistance to corrosion and weathering. A tightly controlled multi-stage process ensures a minimum 3 mils thickness for a finish that can withstand extreme climate changes without cracking or peeling. Standard Super Durable colors include dark bronze, black, natural aluminum, sandstone and white. Available in textured and non-textured finishes.

OPTICS

Precision-molded acrylic lenses are engineered for superior distribution, uniformity, and spacing in wall-mount applications. Light engines are 4000K (70 CRI). The WSQ LED has zero uplight and qualifies as a Nighttime Friendly™ product, meaning it is consistent with the LEED® and Green Globes™ criteria for eliminating wasteful uplight.

ELECTRICAL

Light engine(s) consist of 8 high-efficacy LEDs mounted to a metal core circuit board and integral aluminum heat sinks to maximize heat dissipation and promote long life (100,000 hrs at 25°C, L77). Class 2 electronic driver has a power factor >90%, THD <20%. and a minimum 6 KV surge protection.When ordering the SPD option, a separate surge protection device is installed within the luminaire which meets a minimum Category C low operation (per ANSI/IEEE C62.41.2).

INSTALLATION

A universal mounting plate with integral mounting support arms allows the fixture to hinge down for easy access while making wiring connections.

LISTINGS

CSA certified to U.S. and Canadian standards. Light engines are IP66 rated; luminaire is IP65 rated and suitable for wet locations when mounted with the lenses down. WLU option offers wet location listing in "up"orientation. Rated for -30°C minimum ambient. DesignLights Consortium® (DLC) Premium qualified product and DLC qualified product. Not all versions of this product may be DLC Premium qualified or DLC qualified. Please check the DLC Qualified Products List at www.designlights.org/QPL to confirm which versions are qualified.

WARRANTY

5-year limited warranty. Complete warranty terms located at: www.acuitybrands.com/CustomerResources/Terms_and_conditions.aspx.

Note: Actual performance may differ as a result of end-user environment and application. All values are design or typical values, measured under laboratory conditions at 25 °C. Specifications subject to change without notice.

© 2011-2018 Acuity Brands Lighting, Inc. All rights reserved.

LED CANOPY LIGHT - LEGACY™ (CRUS)

AC distribution utilizes a reflector which alters the look from a standard S distribution

DOE LIGHTING FACTS
Department of Energy has verified representative product test data and results in accordance with its Lighting Facts Program. Visit www.lightingfacts.com for specific catalog strings.

Consult Factory

Class 1, Division 2 – Available on LW and SS

T5 Temperature Classification – The surface temperature of this product will not rise above 100°C., within a 40°C ambient.

Gas Groups A,B,C, and D – Group A: Acetylene / Group B: Hydrogen / Group C: Propane and Ethylene / Group D: Benzene, Butane, Methane & Propane.

US & Int'l. patents pending.

HOUSING - Low profile, durable die-cast, aluminum construction, providing a reliable weather-tight seal.

LEDS - Features an array of select, mid-power, high brightness, high efficiency LED chips; 5000K color temperature, 70 CRI (nominal).

DRIVE CURRENT - Choice of Very Low Wattage (VLW), Low Wattage (LW), Super Saver (SS), High Output (HO) or Very High Output (VHO).

OPTICS / DISTRIBUTION - Choice of Symmetrical or Asymmetrical, which directs light through a clear tempered glass lens, to provide a uniform distribution of light to vertical and horizontal surfaces.

OPTICAL UNIT - Features an ultra-slim 7/8" profile die-cast housing, with a flat glass lens. Unit is water-resistant, sealed to an IP67 rating. Integral designed heat sink does not trap dirt and grime, ensuring cool running performance over the life of the fixture.

PRESSURE STABILIZING VENT - Luminaire assembly incorporates a pressure stabilizing vent breather to prevent seal fatigue and failure.

HAZARDOUS LOCATION - Designed for lighter than air fuel applications. Product is suitable for Class 1 Division 2 only when properly installed per LSI installation instructions (consult factory).

DRIVER - State-of-the-art driver technology superior energy efficiency and optimum light output. Driver components are fully encased in potting for moisture resistance. Complies with IEC and FCC standards. 0-10 V dimming supplied standard with all drive currents.

DRIVER HOUSING - Die-cast aluminum, wet location rated driver/electrical enclosure is elevated above canopy deck to prevent water entry, provide easy "knock-out" connection of primary wiring and contributes to attaining the lowest operating temperatures available. Seals to optical housing via one-piece molded silicone gasket.

OPERATING TEMPERATURE - -40°C to 50°C (-40°F to +122°F)

ELECTRICAL - Universal voltage power supply, 120-277 VAC, 50/60 HZ input. Drivers feature two-stage surge protection (including separate surge protection built into electronic driver) meets IEEE C62.41.2-2002, Scenario 1, Location Category C.

FINISH - Standard color is white and is finished with LSI's DuraGrip® polyester powder coat process. DuraGrip withstands extreme weather changes without cracking or peeling.

INSTALLATION - One person installation. No additional sealant required. Installs in a 12" or 16" deck pan. Deck penetration consists of a 4" hole, simplifying installation and water sealing. Unit is designed to quickly retrofit into existing Scottsdale (4") hole as well as openings for Encore and Encore Top Access and to reconnect wiring for the SC/ECTA without having to relocate the conduit. Retro panels are available for existing Encores (see back page) as well as kits for recessed and 2x2 installations (see separate spec sheets). Support brackets are provided standard, to prevent sagging of deck.

SHIPPING WEIGHT - 27 pounds (single pack), 48 pounds (double pack).

EXPECTED LIFE - Minimum 60,000 to 100,000 hours depending upon the ambient temperature of the installation location. See LSI web site for specific guidance.

WARRANTY - Limited 5-year warranty.

LISTING - UL and ETL listed to UL 1598, UL 8750 and other U.S. and International safety standards. Suitable for wet locations.

PHOTOMETRICS - Please visit our web site at **www.lsi-industries.com** for detailed photometric data.

This product, or selected versions of this product, meet the standards listed below. Please consult factory for your specific requirements.

RoHS COMPLIANT · Intertek wet location · IP67 · CE · c UL us LISTED wet location · DLC

Project Name _____ **Fixture Type** _____

Catalog # _____

08/28/17

© 2017
LSI INDUSTRIES INC.

LED CANOPY LIGHT - LEGACY™ (CRUS)

LUMINAIRE ORDERING INFORMATION

TYPICAL ORDER EXAMPLE: **CRUS SC LED HO 50 UE WHT**

Prefix	Distribution[1]	Light Source	Drive Current	Color Temperature	Input Voltage	Finish	Options
CRUS	SC - Standard Symmetric AC - Asymmetric	LED	VLW - Very Low Watt LW - Low Watt SS - Super Saver HO - High Output VHO - Very High Output	50 - 5000K	UE - Universal Voltage (120-277V) 347 - 480V	WHT - White BRZ - Bronze BLK - Black	HL - Hazardous location available on LW and SS

FOOTNOTES:
1- AC distribution utilizes a reflector which alters the look from a standard S distribution.

ACCESSORY ORDERING INFORMATION (Accessories are field installed)

Description	Order Number
Retrofit Panels - EC / ECTA / SCF to CRU, for 16" Deck Panel	525946
Retrofit Panels - ECTA / SCF to CRU, for 12" Deck Panel	530281
Retrofit 2x2 Cover Panel Blank (no holes)	357282
Retrofit RIC Cover Panel Blank (no holes)	354702

Description	Order Number
Kit - Hole Plugs and Silicone (enough for 25 retrofits)[1]	1320540

1- Consists of (25) 7/8" hole plugs and (1) 10.3 oz tube of RTV

DIMENSIONS

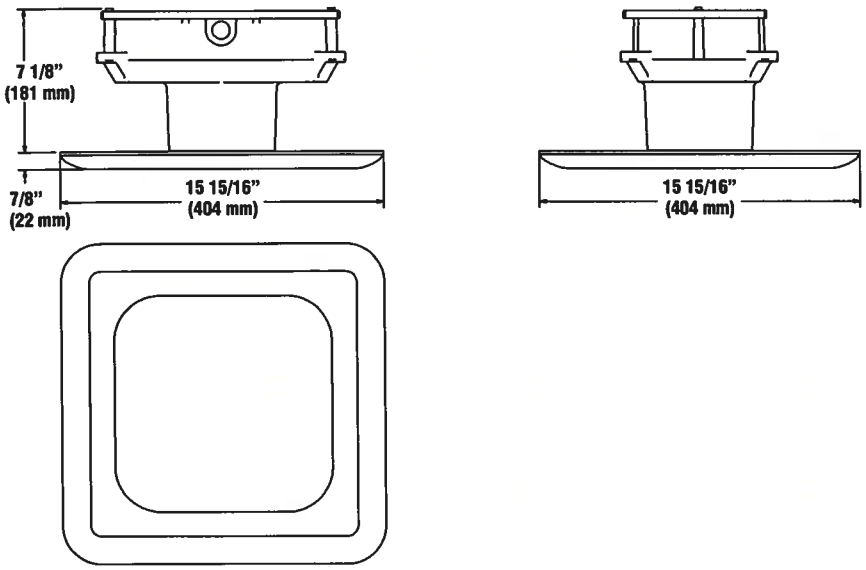

LIGHT OUTPUT - CRUS

		Lumens		Watts	LPW	
		SC	AC	SC/AC	SC	AC
Cool White	VLW - Very Low Watt	9055	7632	61	148	125
	LW - Low Watt	10525	8884	74	142	120
	SS - Super Saver	13674	11595	98	140	118
	HO - High Output	18633	15145	132	141	115
	VHO - Very High Output	22418	17262	159	141	109

Project Name _____ Fixture Type _____

Catalog # _____

08/28/17

© 2017
LSI INDUSTRIES INC.

CONDITIONAL USE PERMIT (CUP)

2/11/19 Plan Commission Meeting

Waste Management of Wisconsin Inc.

Village Planner Report **Germantown, Wisconsin**

Summary

Nick Berner, Diversified Engineering Inc., agent for Waste Management of WI, property owner, is requesting approval of a Conditional Use Permit (CUP) to operate a truck maintenance facility from the property located at N96 W13840 County Line Road.

Location: N96 W13840 County Line Road

Applicant/ Property Owner:

Nick Berner, PE	Don smith, PE
Diversified Engineering	Waste Management of WI
New Philadelphia, OH	Chicago, IL

Zoning: M-2: General Industrial

Adjacent Land Uses		Zoning
North	Agricultural/Industrial	A-1/M-2
South	Industrial (Menomonee Falls)	n/a
East	Industrial (retired landfill)	M-2
West	Residential/Business	Rd-2/Rs-1/B-3

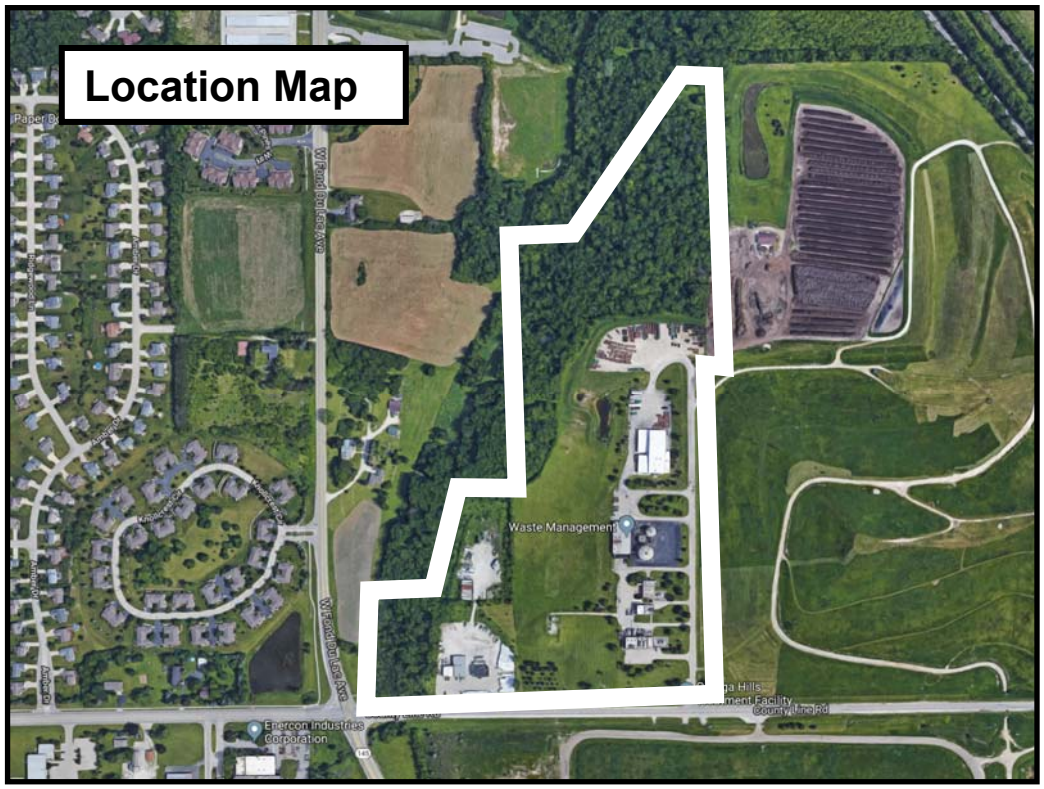

Proposal

Nick Berner, Diversified Engineering Inc., agent for Waste Management of WI, property owner, is requesting approval of a Conditional Use Permit (CUP) to operate a truck maintenance facility from the property located at N96 W13840 County Line Road.

As shown in the various site development plans included in the application, development of the truck maintenance facility will result in re-development of the existing buildings and site improvements on the 8.15-acre parcel formerly occupied by Waste Management's Port-O-Let storage operation on the southwest portion of the property. The facility will extend onto portions of the adjacent 35.6-acre parcel to the east. As noted in the application, Waste Management (WM) intends to combine a total of four adjoining parcels owned by WM located north of County Line Road, east of STH 145/Fond du Lac Avenue, and west of the private internal driveway commonly referred to as "Midlands Drive" that serves other WM operations (i.e. Orchard Ridge Gas-to-Electric Power Plant, the former WM Healthcare Solutions medical waste recycling operation building, and the WM compost operation). This land combination will be accomplished with a certified survey map (CSM) submitted to the Village pending approval of the conditional use permit and site development & building plan applications.

As stated in the application and January 9 project narrative, the proposed truck maintenance facility includes a 35,035 sqft pre-engineered metal building that will serve as a new location for the existing operations and staffing at the Menomonee Falls facility located at W124 N8925 Boundary Road.

The west 9,750 sqft of the building will have office space for thirty (30) staff and a "launch" area serving 90-100 waste hauling truck drivers (office/assembly space for pre-route communications and management). The east 25,285 sqft will have space for a 14-bay truck compressed natural gas (CNG) maintenance facility. The WM vehicle fleet is powered by compressed natural gas (CNG) that results in low or no particulate emissions, greenhouse gases and less noise than comparable diesel-powered trucks.

The operation is expected to serve up to thirty (30) full and part-time office staff and up to 100 truck drivers. Hours of operation are proposed to be 3:30a.m. to 12 midnight, Monday through Friday, and, 5:00am to 12 noon on Saturday.

In addition to the building, site improvements include:

- Vehicle parking with 166 stalls (44 future stalls)
- Truck parking with 100 pull-through and back-in stalls (to address early-morning/late-night vehicle noise)
- Compressed natural gas (CNG) compound & fueling station
- (2) access driveways serving the facility

Staff Comments

Consistency with Village's Land Use Plan & M-2 Zoning District.

The 2020 Land Use Plan map classifies this property as "Industrial/Office". The current zoning of the property (and adjacent WM parcels to the east) is M-2: General Industrial. The proposed truck maintenance facility can be allowed within the M-2 District with a conditional use permit (CUP) under Section 17.35(c) of the M-2 District regulations.

At this time, staff does not have sufficient information about the proposed operation to issue a report & recommendation. Staff questions regarding the operation have been sent to WM and responses are being prepared at this time. Additional information regarding the proposed facility operation and site & building improvements may be submitted for presentation at the public hearing.

In an effort to keep the process moving forward and to accommodate our revised public hearing process, advertising and public notice has already been published and mailed to the surrounding property owners. For that reason, we are obligated to open the public hearing on Monday, February 11 as posted. After comments are received, the plan Commission can either close the hearing or continue it to a future meeting date in order to give the applicant additional time to respond to staff's questions and provide the additional information requested so that staff has a better understanding of the proposal and render a complete review and report to the Plan Commission. However, at this time, there is not sufficient information for staff to determine if the proposed operation would/can be compliant with the M-2 Zoning District requirements and what, if any, conditions to recommend if the proposed operation is to be approved.

For this reason, staff recommends that the public hearing be opened, public comment received, and the public hearing, consideration and action be tabled/continued until the next available Plan Commission meeting (tentatively scheduled for March 11).

Village Planner Recommendation

TABLE consideration and action on the conditional use permit (CUP) application for Waste Management of WI Inc. to operate a truck maintenance facility from the property located at N96 W13840 County Line Road.

Village of Germantown ...Willkommen

Fee must accompany application

- ☐ $700 Minor Addition
- ☐ $1,240 Construction <10,000 SF
- ☐ $2,095 Construction 10,000 SF to 50,000
- ☒ $3,460 Industrial Construction >50,000 SF
- ☐ $3,460 Commercial Construction >50,000
- ☐ $200 Plan Commission Consultation
- ☒ $125 Fire Department Plan Review

PAID 1-7-19 DATE

SITE PLAN REVIEW APPLICATION

Pursuant to Section 17.43 of the Municipal Code

Please read and complete this application carefully. **All applications must be signed and dated.**

1

APPLICANT OR AGENT

Diversified Engineering Inc.
Nick Berner, PE

175 Ray Ave NE
New Philadelphia, OH 44663

Phone (330 364-1631
E-Mail nberner@div-eng.com

PROPERTY OWNER

Waste Management of Wisconsin, Inc.
Contact: Donald Smith, PE

PO Box 1450
Chicago, IL 60690 -1450

Phone (206 806- 6039
E-Mail dasmith@wm.com

PROPERTY ADDRESS

N96W13840 COUNTY LINE RD, GERMANTOWN, WI 53022

NEIGHBORING USES – Specify name and type of use, e.g. Enviro Tech – Industrial, Smith – Residential, etc.

North	South	East	West
See attached – ADJACENT PARCEL ZONING			

4

READ AND INITIAL THE FOLLOWING:

DAS I am aware of the Village of Germantown ordinance requiring fire sprinklers in most new construction.

DAS I understand that all new development is subject to Impact and/or Connection Fees that must be paid before building permits will be issued.

DAS I understand that an incomplete application will be withdrawn from the Plan Commission agenda and that all resubmissions to the Plan Commission are subject to a new application fee.

5

SIGNATURES – ALL APPLICATION MUST BE SIGNED BY OWNER!

1/03/2019

Applicant Date

Donald A Smith 1/03/19

Owner Date

SITE PLAN REVIEW CHECKLIST

Pursuant to Section 17.43 of the Municipal Code

This checklist provides a summary of requirements found in the Municipal Code. It is intended purely as a guide for developers and should not substitute for a full review of the Code and applicable regulations. (Revised 1/02)

GENERAL INFORMATION

- [x] Provide Completed Checklist with submittal
- [x] Names and addresses of owner/developer/designer
- [x] Graphic scale, north arrow
- [x] Location sketch
- [x] Size of site (gross and net acreage)
- [x] Existing zoning
- [x] Adjacent zoning and uses
- [x] Number of residents (subdivisions)
- [x] Number of employees

EXISTING SITE INFORMATION

- [x] Dimensions of site and lot lines (pipes found, pipes set, monuments)
- [x] Existing grades (2' contours minimum)
- [x] Adjacent property grades (within 10' minimum of property lines)
- [x] Adjacent structures (within 20' minimum of property lines)
- [x] Drainage systems and structures
- [x] Natural features (woods, streams, lakes, ponds, outcroppings)
- [x] Wetland boundaries (provide date of staking)
- [x] Floodplain elevation and boundaries
- [x] Environmental concerns (underground tanks, etc)
- [x] Roads, curbs, parking lots, pavement areas
- [x] Structures (location, size)
- [x] Rights-of-Way (existing/ultimate)
- [x] Easements (drainage, utility)
- [x] Existing utilities (sanitary, water, electric, gas, telephone)
- [x] Benchmark locations and elevations
- [x] Location of fences, wells, borings, etc.

ARCHITECTURAL PLANS

- [x] Existing building location
- [x] Existing building elevations/materials
- [x] Proposed use (use list from Section 17.45)
- [x] Statement of design intent (narrative)
- [x] Proposed floor plans (dimension)
- [x] Square footage (total and individual rooms/stores)
- [x] Proposed elevations (dimension)
- [x] Proposed building height
- [x] Proposed materials and colors (material sample board required for new construction)
- [x] Proposed signage (elevations, color, square footage, height, construction material, lighting)
- [x] Details of any special features

PROPOSED SITE PLAN

- [x] Grading and spot elevations
- [x] Erosion control measures (silt fencing, hay bales, rip-rap, tracking mat, stockpile locations)
- [x] Stormwater management
  - stormwater management design report
  - general drainage pattern
  - swales w/ arrows for direction of flow
  - pond design with outfalls
  - culverts (location/size)
- [x] Utilities (size, invert elevations, length, slope, etc.)
  - -- sanitary
  - -- water
  - -- stormsewer
- [x] Building location (dimension)
- [x] Building elevation (finished grade)
- [x] Location of proposed signage
- [x] Details of outside storage (including trash receptacles)
- [x] Setbacks (clearly marked and dimensioned)
- [x] Vehicular entrances (dimension to centerline of nearest intersection)
- [x] Streets (dimension and direction for one-ways)
- [x] Curve radii
- [x] Sidewalks (dimension)
- [x] Parking areas (show striping/spot elevations)
- [x] Parking setback from property line
- [x] Loading areas (dimension)
- [x] Lot coverage
  - Square footage total
  - Impervious surfaces total (%)
  - Green space total (%)
  - Percent permitted (over/under %)
- [x] Municipal utility connections
  - Sanitary sewer (pipe size/elevations)
  - Water (size, valve location, elevations)
  - Location of hydrants
- [x] Easement for public water mains

LIGHTING PLAN

- ☒ Major improvements for context
- ☒ Location/nature of existing fixtures
- ☒ Location of proposed fixtures
- ☒ Photometric report (to scale on plan)
- ☒ Manufacturers cut-sheets of all fixtures
- ☒ Lighting schedule
  - key to plan
  - number/type of fixtures
  - output (wattage)
- ☒ Installation details as appropriate

LANDSCAPING PLAN

- ☒ Major improvements for context (building, drives, walks)
- ☒ Proposed outdoor amenities (benches, paths, etc.)
- ☒ Existing vegetation
  - Species
  - Size
  - Approximate canopy in plan
- ☒ Vegetation to be destroyed
  - List and show location
- ☒ Proposed method of saving existing vegetation during construction
- ☒ Proposed landscape features (berms, fountains)
- ☒ Existing/proposed lighting
- ☒ Irrigation/watering systems (locate outlets)
- ☒ Plant lists or schedules
  - Keyed to plan
  - Number of each species
  - Size when planted (caliper)
- ☒ Installation details/staking

MODEL SUBMITTAL INCLUDES THE FOLLOWING PLANS:

1. Cover / Title Page
2. Existing Conditions Survey
3. General Site Plan
4. Grading, Paving & Erosion Control Plan
5. Utility Plan
6. Site Details (curbing, catch basins, detention ponds, pavement, erosion control and sign details)
7. Landscape Plan
8. Landscape details (planting schedule, berming cross-sections, method of installation)
9. Lighting Plan
10. Floor Plan
11. Exterior Building Elevations
12. Building Material Sample Board

In addition to the items on this list, Village Staff and/or the Plan Commission may require additional drawings and data to be submitted for approval.

If any public improvements or work is to be done in the Public Right-of-Way, the Village will require that a Developer's Agreement be submitted and approved by the Village Board.

ADJACENT PARCEL ZONING:

GNTV_363995*	RS-1 & B-2
GNTV_363990	RS-1
GNTV_363994	B-5
GNTV_363988	A-2
GNTV_363985	M-2
GNTV_362985	A-1
GNTV_363999*	M-2
GNTV_363997*	M-2

Note: (*) Indicates parcels owned by Waste Management of WI, Inc.

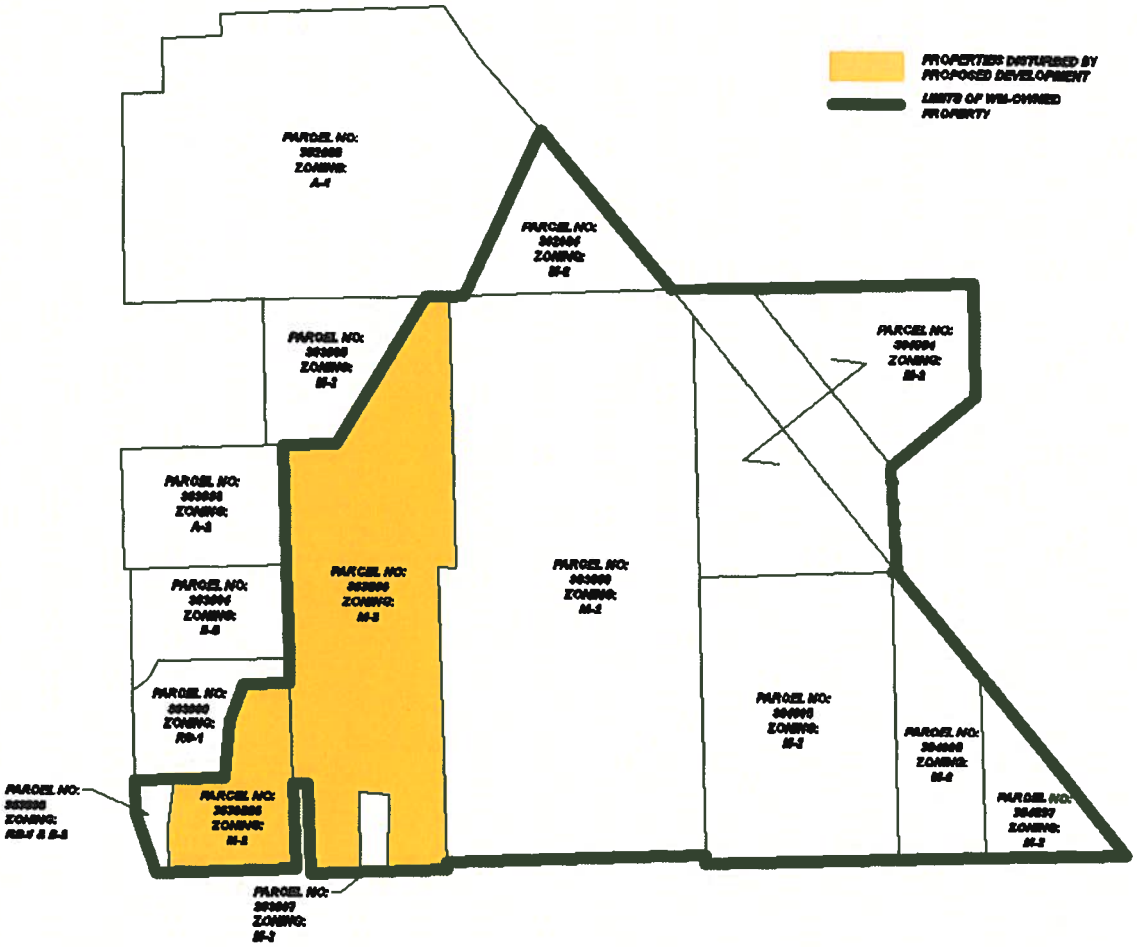

Village of Germantown ...Willkommen

Fee must accompany application

☒ $1460 Paid [illegible] Date 1-7-19

CONDITIONAL USE PERMIT APPLICATION

Pursuant to Section 17.42 of the Municipal Code

Please read and complete this application carefully. **All applications must be signed and dated.**

1

APPLICANT OR AGENT

Diversified Engineering Inc.
Nick Berner, P.E.

175 Ray Ave. NE
New Philadelphia, OH 44663

Phone (330)364-1631
Fax (330)364-4031
E-Mail nberner@div-eng.com

PROPERTY OWNER

Waste Management of Wisconsin Inc.
Donald Smith, P.E.

PO Box 1450
Chicago, IL 60690-1450

Phone (262)806-6039
Email: dasmith@wm.com

2

TO WHOM SHOULD THE PERMIT BE ISSUED?

Waste Management of Wisconsin Inc.

3

PROPERTY ADDRESS	TAX KEY NUMBER
N96W13840 COUNTY LINE RD GERMANTOWN, WI 53022	363996 & 363986

4

DESCRIPTION OF EXISTING OPERATION

Briefly describe the use as it exists today, including use, size, number of employees, hours of operation, etc. If this permit involves new construction, describe the current status of the property, e.g. "vacant." Use additional pages as necessary.

Tax Key 363996: Currently occupied by WM Port-o-let division garage, office and storage area (approximately 8.15 ac.).

Tax Key 363986: Currently occupied by WM Orchard Ridge Gas to Electric Power Plant , Industrial Pretreatment Plant and WM Healthcare Solutions building (approximately 35.63 ac.)

5

DESCRIPTION OF PROPOSED OPERATION

Write the name of the proposed conditional use exactly as it appears in the Municipal Code.
Germantown, WI Municipal Code, Chapter 17.34 - M-2 General Industrial District, Section 3

Describe the proposed use, including size, number of employees, hours of operation and extent of any new construction/alterations.

Conditional use permit requested for development of parcels 363996 and 363986. Proposed development includes the construction of a Waste Management Trucking Facility (250'x100') and office space (75'x130'). Hours of operation are anticipated to be 3:30am-midnight, M-F and 5am-noon, Saturday. The facility is anticipated to serve 100 employees during first shift/day shift, and approximately 10 during second shift.

METES AND BOUNDS LEGAL DESCRIPTION OF PROPERTY — REQUIRED

6

Tax key 363996: Lot 2- CSM4247 V28 P30 PT of SW V1013 P676 SEC 36-9-20 8.15 ac.

Tax key 363986: PT NW SW V747 P264 PT SOLD SEC 36-9-20

See attached CSM 4247 and Deed and exclusion for 363986

SUPPORTING DOCUMENTATION:

7

- ☒ Site plan and elevations for new construction (can be conceptual)
- ☒ Photos of existing use and/or proposed use operating elsewhere
- ☐ _____
- ☐ _____

READ AND INITIAL THE FOLLOWING:

8

DAS **I understand that the Village is under no obligation to issue a Conditional Use Permit and will do so only if the applicant successfully demonstrates that the proposed use is harmonious with the neighborhood and the long range goals of the Village.**

DAS **I will notify the Village if <u>any</u> aspect of the conditional use changes. I understand that failure to do so may result in the revocation of the CUP.**

DAS **I understand that a Conditional Use Permit is valid only if the conditions and restrictions of the permit are met. I understand that failure to comply with any aspect of the permit may result in revocation.**

SIGNATURES — ALL APPLICATIONS MUST BE SIGNED BY OWNER!

9

Applicant	Date	Owner	Date
[signature]	1/03/2019	Della Smith	1/03/19

658232

CERTIFIED SURVEY MAP NO. _____

BEING A REDIVISION OF C.S.M. NO. 3402, C.S.M. NO. 455 AND UNPLATTED LANDS, ALL IN THE SW 1/4 OF THE SW 1/4 OF SECTION 36, TOWN 9 NORTH, RANGE 20 EAST, IN THE VILLAGE OF GERMANTOWN, WASHINGTON COUNTY, WISCONSIN.

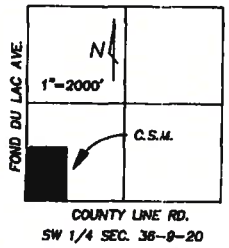

LOCATION MAP

LEGEND

O—DENOTES 1"X24" IRON PIPE WEIGHING 1.13 LBS. PER LINEAL FOOT SET

*—DENOTES BEARING ALSO REC. AT 0° 00' 11" ROTATED CLOCKWISE

ALL BEARINGS REFERENCED TO GRID NORTH OF THE WISCONSIN STATE PLANE COORDINATE SYSTEM, SOUTH ZONE

INT. ANGLES

① 89°59'55"	⑤ 114°48'55"	⑨ 188°07'10"
② 89°20'49"	⑥ 196°36'05"	⑩ 124°35'41"
③ 90°39'16"	⑦ 177°04'31"	⑪ 90°38'13"
④ 269°20'44"	⑧ 188°47'38"	⑫ 90°00'55"
		⑬ 270°00'05"

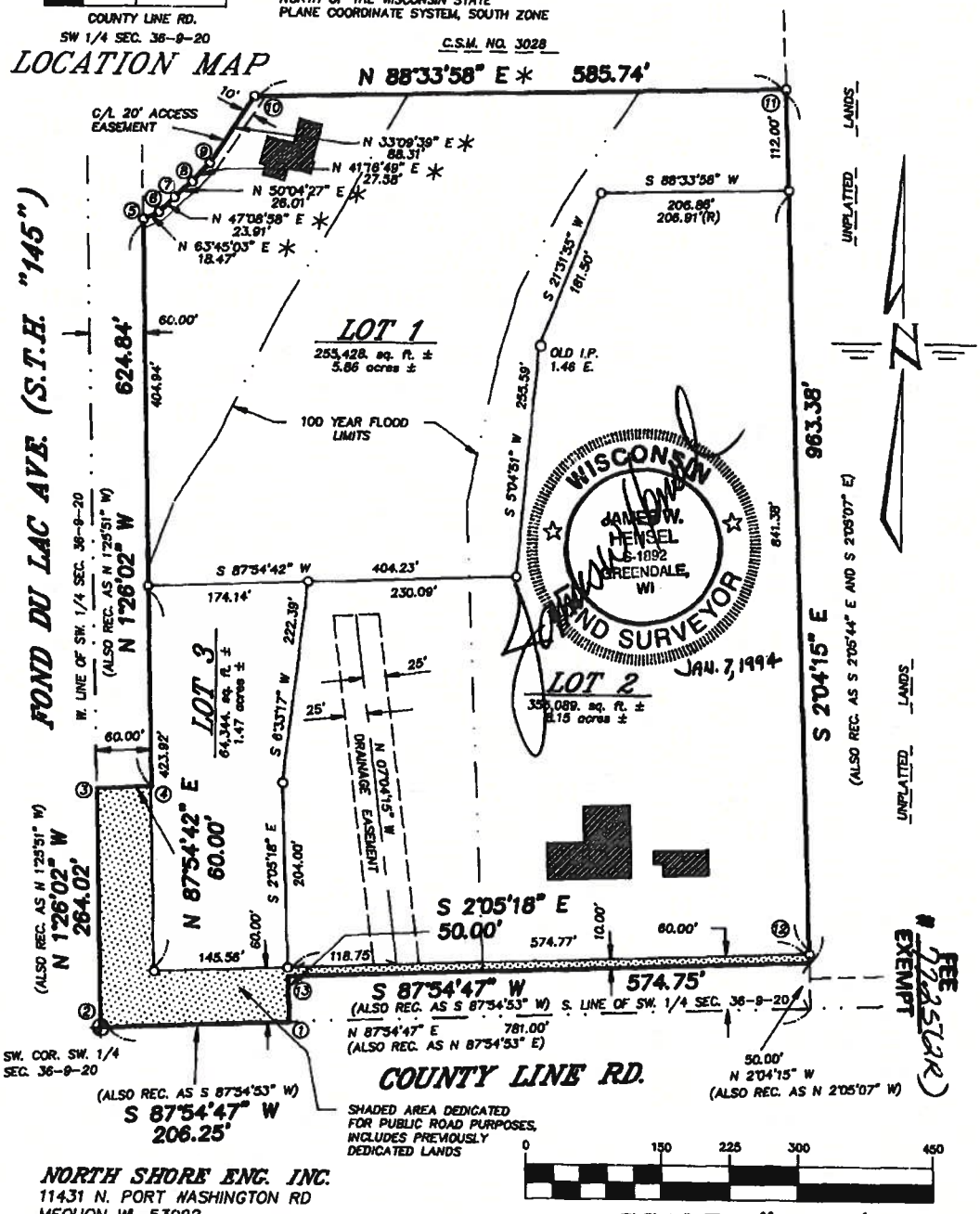

NORTH SHORE ENG. INC.
11431 N. PORT WASHINGTON RD
MEQUON WI. 53092

THIS INSTRUMENT DRAFTED BY JAMES W. HENSEL

SHEET 1 OF 3 SHEETS

Map No. 4247 Vol. 28 Page 30

658232

CERTIFIED SURVEY MAP NO. _____

Being a redivision of C.S.M. No. 3402, C.S.M. No. 455 and unplatted lands, all in the S.W. 1/4 of the S.W. 1/4 of Section 36, Town 9 North, Range 20 East, in the Village of Germantown, Washington County, Wisconsin.

SURVEYOR'S CERTIFICATE

I, James W. Hensel, Registered Land Surveyor, do hereby certify:

THAT I have surveyed, divided and mapped the following parcel of land:

C.S.M. No. 3402, C.S.M. No. 455 and unplatted lands, all in the S.W. 1/4 of the S.W. 1/4 of Section 36, Town 9 North, Range 20 East, in the Village of Germantown, Washington County, Wisconsin.

Commencing at the S.W. corner of said 1/4 Section; thence N1°26'02"W (also recorded as N1°25'51"W) along the West line of said 1/4 Section, 264.02 feet; thence N87°54'42"E, 60.00 feet to a point in the East right-of-way line of Fond du Lac Ave. (S.T.H. "145") said point also being the southwest corner of Outlot 2 of C.S.M. No. 3402; thence N1°26'02"W (also recorded as N1°25'51"W), along said East line and the West line of Outlot 2 and Lot 1 of C.S.M. No. 3402, 624.84 feet to the northwesterly corner of Lot 1 of C.S.M. No. 3402; thence N63°45'03"E (also recorded as N63°45'14"E), along the northerly line of Lot 1 of C.S.M. No. 3402, 18.47 feet; thence N47°08'58"E (also recorded as N47°09'09"E), along said northerly line, 23.91 feet; thence N50°04'27"E (also recorded as N50°04'38"E), along said northerly line, 26.01 feet; thence N41°16'49"E (also recorded as N41°17'00"E), along said northerly line, 27.58 feet; thence N33°09'39"E (also recorded as N33°09'50"E), along said northerly line, 88.31 feet to the northwest corner of Lot 1 of C.S.M. No. 3402; thence N88°33'58"E (also recorded as N88°34'09"E), along the north line of Lot 1 of C.S.M. No. 3402, 585.74 feet to the northeast corner of Lot 1 of C.S.M. No. 3402; thence S2°04'15"E (also recorded as S2°05'44"E and S2°05'07"E), along the east lines of Lot 1 and Outlot 1 of C.S.M. No. 3402, and the east line of the parcel recorded as C.S.M. No. 455, 963.38 feet to the southeast corner of the parcel recorded as C.S.M. No. 455, said point lying in the North right-of-way line of County Line Road (C.T.H. "Q"); thence S87°54'47"W (also recorded as S87°54'53"W), along said North line, 574.75 feet to the southwest corner of the aforementioned parcel; thence S2°05'18"E, 50.00 feet to a point in the South line of said 1/4 Section; thence S87°54'47"W (also recorded as S87°54'53"W), along said South line, 206.25 feet to the point of commencement. Said lands containing 16.18 acres of land more or less. Excepting the South 10.00 feet and the Southwest 60.00 feet dedicated for public road purposes.

THAT I have made such survey, land division and plat at the direction of Waste Management of Wisconsin, Inc., OWNER of said lands.

THAT such map is a correct representation of all the exterior boundaries of the land surveyed and the land division thereof made.

THAT I have complied with the provisions of Chapter 236.34 of the Wisconsin statutes and the requirements of the Village of Germantown.

James W Hensel JAN. 7, 1994

James W. Hensel L.S., 1892

This instrument drafted by James W. Hensel

WISCONSIN JAMES W. HENSEL S-1892 GREENDALE, WI LAND SURVEYOR

Map No. 4247 Vol. 28 Page 31

Diversified Engineering Inc.
CONSULTING ENGINEERS & SURVEYORS

January 8, 2019

Design Narrative

Project: Waste Management – Germantown Truck Maintenance Facility

The Germantown Truck Maintenance Facility will be a 35,035 square foot pre-engineered metal building located at parcel 363986 & 3639896. The facility will serve as a new CNG compliant facility for existing operations and staffing at the Waste Management Menomonee Falls Facility.

The building will be divided into two structures of differing eaves and use groups with a dividing masonry unit fire wall. The western portion of the facility will be a single-story 9,7500 square foot office, 15' eave, consisting of thirteen office spaces and sixteen cubicles, serving a maximum daily staff of thirty. The office space also incorporates locker rooms and launch areas to serve 90-100 drivers.

The eastern portion of the building will serve as a 25,285 square foot, 28' eave, CNG compliant maintenance facility. The space is designed to operate 14 maintenance bays split by a parts/tools and vital equipment storage space with pull through wash bay at the eastern end of the building. The building will be equipped with necessary monitoring systems, automated alarms and air change units per CNG code compliance.

The structure has been designed to match the surrounding campus of various industrial buildings owned and operated by Waste Management. Most notably in design materials, color pallet and façade. Additional design considerations have been incorporated with intent of improving site safety and appearance as well as minimize operational noise.

The building has been set approximately five hundred feet north from County Line Rd, to allow the existing dilapidated structure and staging area can be removed and replaced. The proposed design incorporates additional green space, landscaped berms and tree lined employee parking area in the place of the existing structure and storage areas. The landscaping berm has been set back from County Line Rd approximately 80-90 feet to allow for additional visibility for on-coming maintenance vehicle traffic.

Maintenance vehicle parking has been located at the north end of the parcel with a dedicated drive to the northeast connecting to the existing drive along the eastern edge of the property. The parking area has been designed to incorporate pull through and back in spaces to reduce noise during morning vehicle launches, by ensuring vehicles first move is forward. The dedicated drive to the northeast allows for vehicles to access County Line Rd at an existing pronounced intersection that features added sight distance.

Sincerely,

175 Ray Ave. N.E. New Philadelphia, OH 44663 - Phone: 330-364-1631 - Fax: 330-364-4031 - Email: dei@div-eng.com

Village of Germantown, WI

CONDITIONAL USE PERMIT SUBMITTAL PACKET

For

Waste Management
Truck Maintenance Facility

N96W13840 County Line Road
Germantown, WI 53022

January 4th, 2019

Prepared For:

WASTE MANAGEMENT

Prepared By:

Diversified Engineering Inc.
CONSULTING ENGINEERS & SURVEYORS

TABLE OF CONTENTS

General Project Information and Applications:

Attachment 1	Project Contacts and Site Information
Attachment 2	Conditional Use Permit Application
Attachment 3	Site Plan and Elevations
Attachment 4	Site Photos – Existing/Proposed

Project Contacts and Site Information

PROJECT OWNER:

Waste Management of Wisconsin, Inc.
PO Box 1450
Chicago, IL 60690-1450

Contact: Donald Smith, PE
Phone: (262) 806-6039
Email: dasmith@wm.com

OWNER REPRESENTATIVE/ ENGINEER:

175 Ray Ave. NE
New Philadelphia, OH 44663

Project Manager: Nick Berner, PE
Phone: (330) 364-1631
Email: nberner@div-eng.com

SITE INFORMATION:

Parcels Disturbed	GNTV_363996	GNTV_363986
Acreage	8.15 ac.	35.63 ac.
Current Zoning	M-2	M-2

ADJACENT PARCEL ZONING:

GNTV_363995*	RS-1 & B-2
GNTV_363990	RS-1
GNTV_363994	B-5
GNTV_363988	A-2
GNTV_363985	M-2
GNTV_362985	A-1
GNTV_363999*	M-2
GNTV_363997*	M-2

Note: (*) Indicates parcels owned by Waste Management of WI, Inc.

FEMA INFORMATION:

Community Number	550472
Panel #	0379
Suffix	D
Date of FIRM	11/20/2013
FIRM Zone	A
Base Flood Elevation	769 FT.

658232

Map No. 4247 Vol. 28 Page 30

CERTIFIED SURVEY MAP NO. _____

BEING A REDIVISION OF C.S.M. NO. 3402, C.S.M. NO. 455 AND UNPLATTED LANDS, ALL IN THE SW 1/4 OF THE SW 1/4 OF SECTION 36, TOWN 9 NORTH, RANGE 20 EAST, IN THE VILLAGE OF GERMANTOWN, WASHINGTON COUNTY, WISCONSIN.

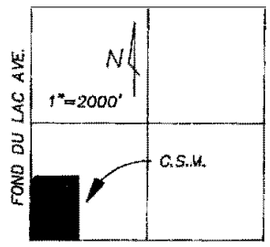

SW 1/4 SEC. 36--9-20

LOCATION MAP

LEGEND

O-DENOTES 1"X24" IRON PIPE WEIGHING 1.13 LBS. PER LINEAL FOOT SET

*-DENOTES BEARING ALSO REC. AT 0° 00' 11" ROTATED CLOCKWISE

ALL BEARINGS REFERENCED TO GRID NORTH OF THE WISCONSIN STATE PLANE COORDINATE SYSTEM, SOUTH ZONE

INT. ANGLES

(1) 89°59'55"	(5) 114°48'55"	(9) 188°07'10"
(2) 89°20'49"	(6) 196°36'05"	(10) 124°35'41"
(3) 90°39'16"	(7) 177°04'31"	(11) 90°38'13"
(4) 269°20'44"	(8) 188°47'38"	(12) 90°00'58"
		(13) 270°00'05"

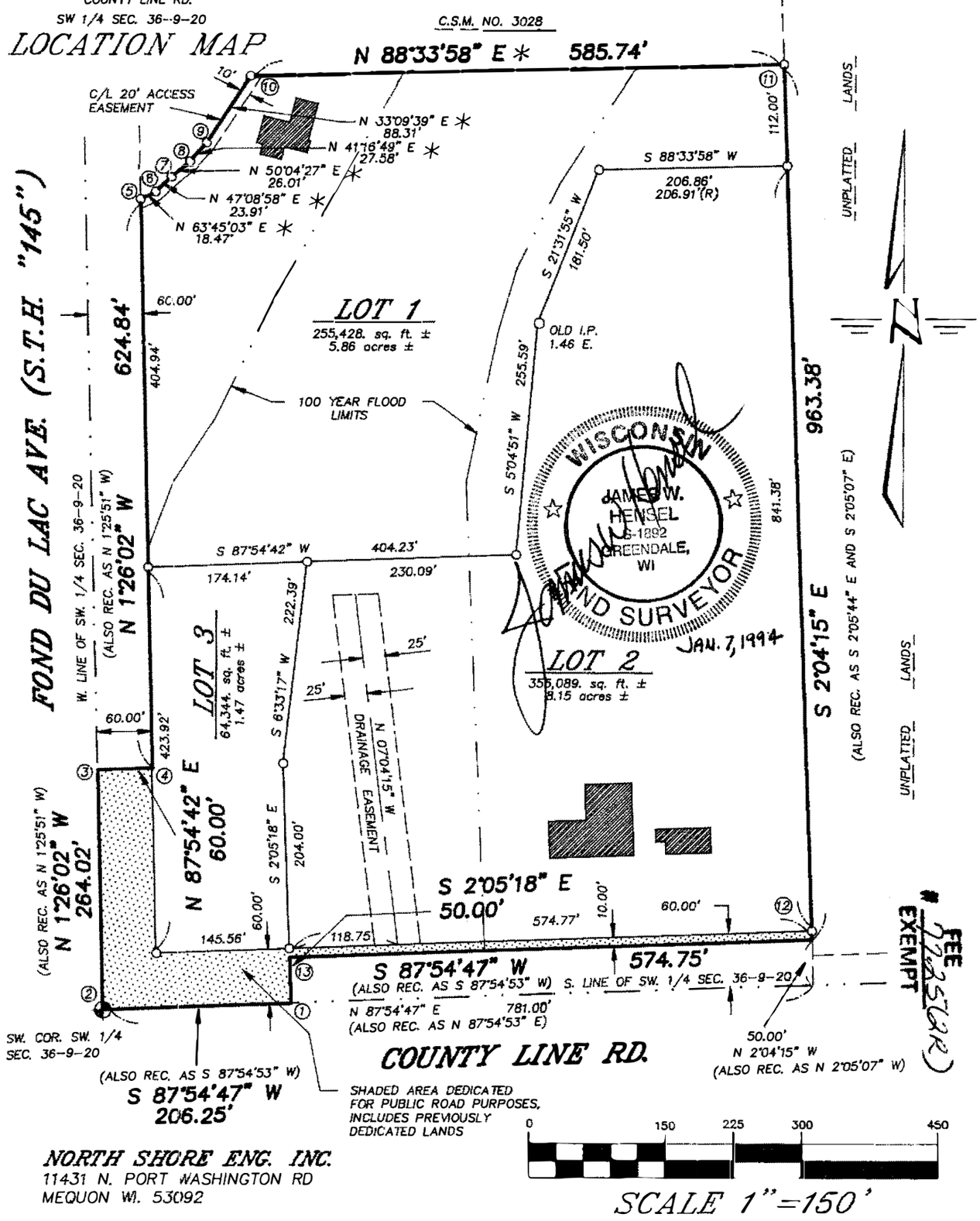

NORTH SHORE ENG. INC.
11431 N. PORT WASHINGTON RD
MEQUON WI. 53092

THIS INSTRUMENT DRAFTED BY JAMES W. HENSEL

SHEET 1 OF 3 SHEETS

CERTIFIED SURVEY MAP NO. _____

Being a redivision of C.S.M. No. 3402, C.S.M. No. 455 and unplatted lands, all in the S.W. 1/4 of the S.W. 1/4 of Section 36, Town 9 North, Range 20 East, in the Village of Germantown, Washington County, Wisconsin.

658232

SURVEYOR'S CERTIFICATE

I, James W. Hensel, Registered Land Surveyor, do hereby certify:

THAT I have surveyed, divided and mapped the following parcel of land:

C.S.M. No. 3402, C.S.M. No. 455 and unplatted lands, all in the S.W. 1/4 of the S.W. 1/4 of Section 36, Town 9 North, Range 20 East, in the Village of Germantown, Washington County, Wisconsin.

Commencing at the S.W. corner of said 1/4 Section; thence N1°26'02"W (also recorded as N1°25'51"W) along the West line of said 1/4 Section, 264.02 feet; thence N87°54'42"E, 60.00 feet to a point in the East right-of-way line of Fond du Lac Ave. (S.T.H. "145") said point also being the southwest corner of Outlot 2 of C.S.M. No. 3402; thence N1°26'02"W (also recorded as N1°25'51"W), along said East line and the West line of Outlot 2 and Lot 1 of C.S.M. No. 3402, 624.84 feet to the northwesterly corner of Lot 1 of C.S.M. No. 3402; thence N63°45'03"E (also recorded as N63°45'14"E), along the northerly line of Lot 1 of C.S.M. No. 3402, 18.47 feet; thence N47°08'58"E (also recorded as N47°09'09"E), along said northerly line, 23.91 feet; thence N50°04'27"E (also recorded as N50°04'38"E), along said northerly line, 26.01 feet; thence N41°16'49"E (also recorded as N41°17'00"E), along said northerly line, 27.58 feet; thence N33°09'39"E (also recorded as N33°09'50"E), along said northerly line, 88.31 feet to the northwest corner of Lot 1 of C.S.M. No. 3402; thence N88°33'58"E (also recorded as N88°34'09"E), along the north line of Lot 1 of C.S.M. No. 3402, 585.74 feet to the northeast corner of Lot 1 of C.S.M. No. 3402; thence S2°04'15"E (also recorded as S2°05'44"E and S2°05'07"E), along the east lines of Lot 1 and Outlot 1 of C.S.M. No. 3402, and the east line of the parcel recorded as C.S.M. No. 455, 963.38 feet to the southeast corner of the parcel recorded as C.S.M. No. 455, said point lying in the North right-of-way line of County Line Road (C.T.H. "Q"); thence S87°54'47"W (also recorded as S87°54'53"W), along said North line, 574.75 feet to the southwest corner of the aforementioned parcel; thence S2°05'18"E, 50.00 feet to a point in the South line of said 1/4 Section; thence S87°54'47"W (also recorded as S87°54'53"W), along said South line, 206.25 feet to the point of commencement. Said lands containing 16.18 acres of land more or less. Excepting the South 10.00 feet and the Southwest 60.00 feet dedicated for public road purposes.

THAT I have made such survey, land division and plat at the direction of Waste Management of Wisconsin, Inc., OWNER of said lands.

THAT such map is a correct representation of all the exterior boundaries of the land surveyed and the land division thereof made.

THAT I have complied with the provisions of Chapter 236.34 of the Wisconsin statutes and the requirements of the Village of Germantown.

James W. Hensel JAN. 7, 1994

James W. Hensel L.S., 1892

This instrument drafted by James W. Hensel

WISCONSIN JAMES W. HENSEL S-1892 GREENDALE, WI LAND SURVEYOR

Map No. 4247 Vol. 28 Page 31

CERTIFIED SURVEY MAP NO. _____

Being a redivision of C.S.M. No. 3402, C.S.M. No. 455 and unplatted lands, all in the S.W. 1/4 of the S.W. 1/4 of Section 36, Town 9 North, Range 20 East, in the Village of Germantown, Washington County, Wisconsin.

658232

OWNER'S CERTIFICATE

WASTE MANAGEMENT OF WISCONSIN, INC. as OWNER, hereby certifies that it caused the land described on this certified survey map to be surveyed, mapped and dedicated as represented on the certified survey map in accordance with the ordinances of the Village of Germantown.

WITNESS THE HAND AND SEAL OF SAID CORPORATION AND ITS OFFICER THIS 10th DAY OF January, 1994.

In the Presence of:

WASTE MANAGEMENT OF WISCONSIN, INC.

Robert Borkenhagen, General Manager

STATE OF WISCONSIN)
WASHINGTON COUNTY)ss

PERSONALLY came before me this 10th day of January, 1994, the above named Robert Borkenhagen, General Manager, to me known to be the person who executed the foregoing instrument and acknowledged the same.

Notary Public

My Commission expires 9/7/97

VILLAGE OF GERMANTOWN PLAN COMMISSION APPROVAL

Approved by the Village of Germantown Plan Commission, this 10th day of January, 1994.

Chairman

Secretary

JAN 21 9 00 AM '94
REGISTER OF DEEDS
OF WASHINGTON COUNTY, WI

RECORDED

Map No. 4247 Vol. 28 Page 32

VILLAGE OF GERMANTOWN BOARD APPROVAL

APPROVED by the Village of Germantown board and highway dedication accepted on this 17th day of January, 1994.

Village President

Clerk

This instrument drafted by James W. Hensel

WISCONSIN JAMES W. HENSEL S-1892 GREENDALE, WI LAND SURVEYOR

JAN. 7, 1994

DOCUMENT NO

434539

VOL. REC. 747 PAGE 264

STATE BAR OF WISCONSIN FORM 1
WARRANTY DEED

FEB 19 9 26 AM '81

This Deed, made between Gordian Liermann by Emma Maas Liermann, his Attorney-In-Fact and Emma Maas Liermann, his wife

Grantor

and Waste Management of Wisconsin, Inc., a Wisconsin Corporation

Grantee,

Witnesseth, That the said Grantor, for a valuable consideration

convey to Grantee the following described real estate in Washington County, State of Wisconsin:

RETURN TO
Mr. Douglas D. Smiljanic
Attorney At Law
N88 W17015 Main St.
Menomonee Falls, WI 53051

Tax Key No.

All that part of the Southwest ¼ of Section 36, Township 9 North, Range 20 East, Village of Germantown, Washington County, Wisconsin, bounded and described as follows:
COMMENCING at the West ¼ corner of the said Section 36; thence N88° 13' 49.7" E. along the North Line of the said SW ¼ of Section 36, 684.747 feet to the point of beginning of this description; thence continuing along the said North Line, 845.663 feet; thence S 01° 45' 50.53" E, 1241.501 feet; thence S 87° 54' 15.49" W, 79.981 feet; thence S 01° 45' 50.53" E, 1400.00 feet to a point on the South Line of the said SW¼ of Section 36; thence S87° 54' 15.77" W, along the said South Line, 263.23 feet; thence N 2° 05' 44.2" W, 363.00 feet; thence S 87° 54' 15.77" W and parallel to the said South Line, 120.00 feet; thence S 2° 05' 44.2" E, 363.00 feet to a point on the said South Line; thence S 87° 54' 15.77" W, along the said South Line, 235.20 feet; thence N 2° 05' 44.2" W along a public Road right of way, 445.890 feet; thence S 87° 54' 15.77" W, and parallel to the said South Line 66.00 feet; thence N 2° 05' 44.23" W 1540.00 feet; thence S 88° 13' 49.66" W, 79.49 feet; thence N 01° 26' 25.02" W, 660.00 feet to the point of beginning of this description and containing 43.667 acres.

TRANSFER
131.00
FEE

This is (is) (is not) homestead property.

Together with all and singular the hereditaments and appurtenances thereunto belonging.

And Gordian Liermann and Emma Maas Liermann, his wife

warrants that the title is good, indefeasible in fee simple and free and clear of encumbrances except municipal and zoning ordinances and recorded easements for public utilities located adjacent to side and rear lot lines; recorded building and use restrictions and covenants; and general taxes for the year of 1980 and 1981.

and will warrant and defend the same.

Dated this 11th day of February, 1981

Douglas D. Smiljanic (SEAL)
Douglas D. Smiljanic

(SEAL)

(SEAL)
Gordian Liermann by Emma Maas Liermann, his Attorney-in-Fact

(SEAL)
Emma Maas Liermann

AUTHENTICATION

Signatures authenticated this day of , 19

TITLE: MEMBER STATE BAR OF WISCONSIN
(If not, authorized by § 706.06, Wis. Stats.)

THIS INSTRUMENT WAS DRAFTED BY
Douglas D. Smiljanic
Attorney At Law

(Signatures may be authenticated or acknowledged. Both are not necessary.)

ACKNOWLEDGMENT

STATE OF WISCONSIN)
) ss
Waukesha County)

Personally came before me, this 11th day of February 1981, the above named Gordian Liermann by Emma Maas Liermann, his Attorney-In-Fact and Emma Maas Liermann, his wife

to me known to be the persons who executed the foregoing instrument and acknowledged the same.

Douglas D. Smiljanic
Douglas D. Smiljanic
Notary Public Waukesha County, Wis.
My Commission is permanent. (If not, state expiration date , 19 .)

*Names of persons signing in any capacity should be typed or printed below their signatures.

State Bar of Wisconsin Form 1-2003

WARRANTY DEED

Document Number | Document Name

DOC# 1185031

Recorded
Mar. 06, 2008 AT 01:20PM
SHARON A MARTIN, REGISTER OF DEEDS
WASHINGTON COUNTY, WISCONSIN

Fee Amount: $13.00
Transfer Fee: $207.30

Recording Area 13.2

Name and Return Address
Davis & Kuelthau, SC
111 E. Kilbourn, Suite 1400
Milwaukee WI 53202

THIS DEED, made between **Waste Management of Wisconsin, Inc., a Wisconsin Corporation**

("Grantor," whether one or more), and **FC Milwaukee Nationals, Inc., a Wisconsin Corporation**

("Grantee," whether one or more).

Grantor for a valuable consideration, conveys to Grantee the following described real estate, together with the rents, profits, fixtures and other appurtenant interests, in **Washington** County, State of Wisconsin ("Property") (if more space is needed, please attach addendum):
SEE ATTACHED LEGAL

Part of GTNV 363-993
Parcel Identification Number (PIN)

This **is not** homestead property.
(is) (is not)

SUBJECT TO THE FOLLOWING DEED RESTRICTION:
"The Property conveyed herein shall not be used for any purpose related to the waste industry including, but not limited to, the hauling, processing, transferring, storage, recycling or disposal of solid waste (including demolition waste) or hazardous waste. These restrictions are perpetual and declared to be covenants running with the land and shall be fully binding upon all persons or entities acquiring title to the land whether by descent, devise, purchase or otherwise."

Grantor warrants that the title to the Property is good, indefeasible, in fee simple and free and clear of encumbrances except: **Municipal and zoning ordinances, recorded easements for public utilities serving the property, recorded building and use restrictions and covenants, and taxes levied in the year of closing.**

$ 207.30 TRANSFER FEE

Dated February 28, 2008.

(SEAL) _____
* _____

(SEAL) _____
* _____

Waste Management of Wisconsin, Inc.
(SEAL) _____
***By:** BRENDAN SHEEHAN

(SEAL) _____
***Title: Authorized Representative**

AUTHENTICATION

Signature(s) _____

authenticated on _____.

*

TITLE: MEMBER STATE BAR OF WISCONSIN
(If not, _____
authorized by Wis. Stat. § 706.06)

THIS INSTRUMENT DRAFTED BY:
David E. Stewart
State Bar No. 1013409

ACKNOWLEDGMENT

STATE OF **ILLINOIS**)
) ss.
Will COUNTY)

Personally came before me on January 28, **2008**, the above-named BRENDAN SHEEHAN, Authorized Representative, Waste Management of Wisconsin, Inc. to me known to be the person(s) who executed the foregoing instrument and acknowledged the same.

Notary Public, State of **Illinois**
My commission (is permanent) (expires: January 24, 2010)

(Signatures may be authenticated or acknowledged. Both are not necessary.)
NOTE: THIS IS A STANDARD FORM. ANY MODIFICATION TO THIS FORM SHOULD BE CLEARLY IDENTIFIED.

*Type name below signatures.

INFO-PRO™ Legal Forms • (800)655-2021 • infoproforms.com

LEGAL DESCRIIPTION

That a part of the Northwest ¼ and the Northeast ¼ of the Southwest ¼ of Section 36, Town 9 North, Range 20 East, in the Village of Germantown, Washington County, Wisconsin, bounded and described as follows:

Commencing at the Northwest corner of the Southwest ¼ of said Section; thence N88° 14' 45" E along the South line of the Northwest ¼ of said Section 684.75 feet to the point of beginning; thence continuing N88° 14' 45"E 720.75 feet to a meander line; thence S32° 13' 41" W along a meander line 795.93 feet to the end of a meander line; thence S88° 14' 45"W 279.66 feet; thence N01° 25' 30"W 660.00 feet to the point of beginning. Including all the land lying between the meander line and the property lines extended to the center line of a creek to the East. Containing 7.58 acres of land to the meander line and 7.93 acres +/- to the center line of a creek.

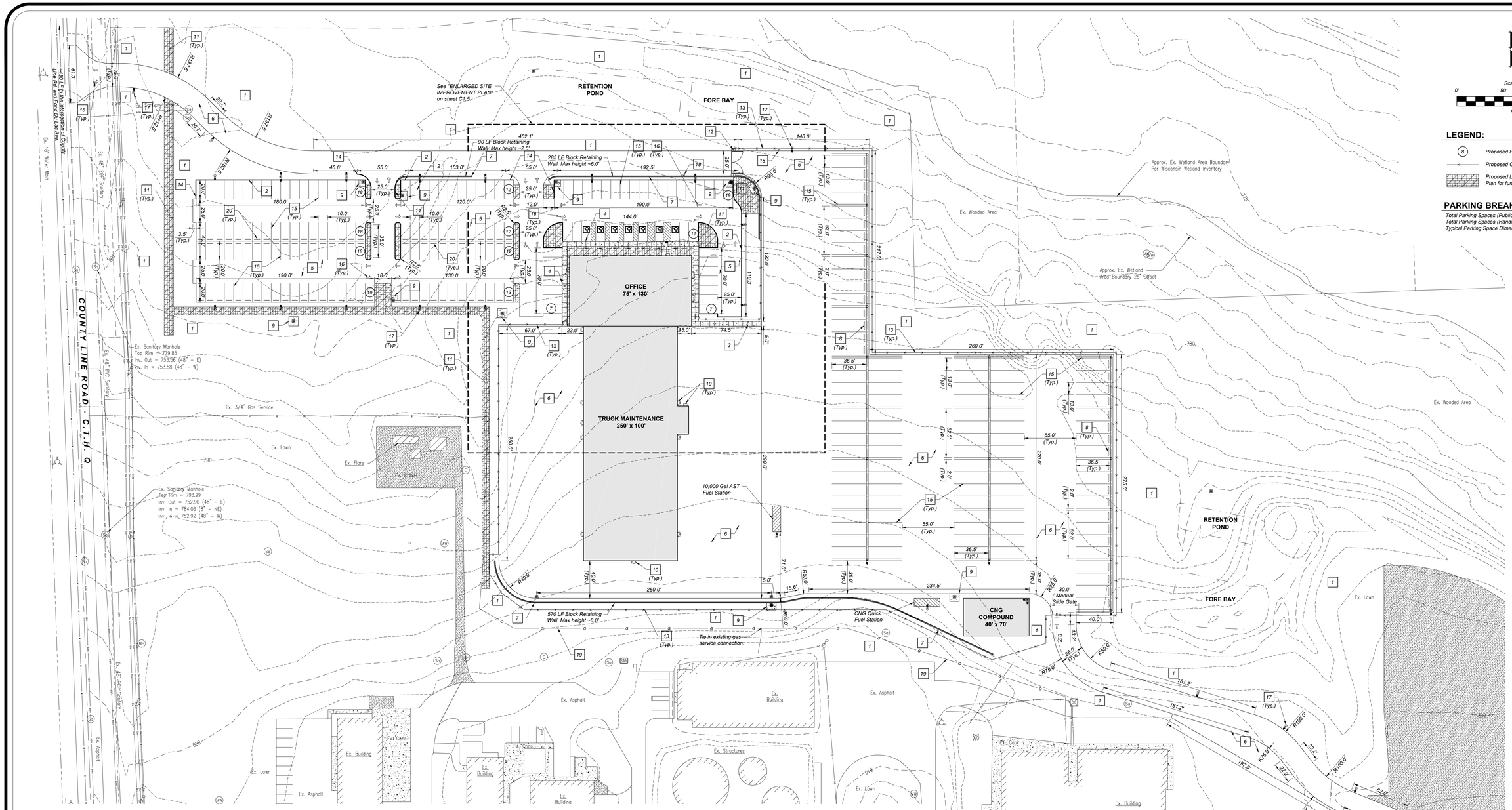

SITE IMPROVEMENT PLAN

Scale: 1" = 50'

LEGEND:

- (8) Proposed Parking Space Count Indicator
- Proposed Chain Link Fence
- Proposed Landscaping Area, See Site Landscaping Plan for further coordination

PARKING BREAKDOWN

Total Parking Spaces (Public) = 159
Total Parking Spaces (Handicap) = 7
Typical Parking Space Dimension: 10' x 20' (Unless otherwise noted)

KEYED NOTES:

1.) Grass area (slope to drain). Re-seed existing lawn where disturbed by new construction and construction activities.

2.) 6" concrete curb.

3.) 4" concrete sidewalk.

4.) Integral concrete curb and walk.

5.) Proposed light-duty asphalt pavement.

6.) Proposed heavy-duty concrete pavement.

7.) Block Retaining Wall.

8.) Concrete truck wheel stop.

9.) Reinforced Concrete Apron.

10.) Frost footing at man doors.

11.) Proposed Landscaping: (Shown for reference). See Sheet L1.0 "Site Landscaping Plan".

12.) Swing Gate Operator & Concrete Pad provided & installed by G.C., equal to "LiftMaster Elite Series" Model CSW24U, 120V (Conduits & Wire by E.C.).

13.) 6' high chain link security fence / access gate.

14.) Taper curb.

15.) Pavement painting: 4" wide yellow striping.

16.) Pavement marking: Yellow directional arrow.

17.) Proposed site lighting: By E.C. (shown for reference). See site electrical plan.

18.) Pedestal for gate operator access control key pad, furnished and installed by G.C. Conduit to pedestal by E.C., wiring by Access Control installer.

19.) Proposed relocated 3/4" gas service line location.

20.) Concrete parking bumper.

*NOTE: See "SITE PLAN REVIEW SUBMITTAL PACKET" for typical construction details.

GENERAL NOTES:

A. Provide smooth transition from newly paved areas to existing paved area as necessary. The existing edge of pavement shall be free of all loose debris at all areas where proposed pavement meets existing pavement. The edge of existing asphalt pavement shall be properly sealed with a tack coat material in all areas where new asphalt pavement is indicated to join existing.

B. Contractor is responsible for locating and verifying all existing underground utilities prior to construction, and is responsible for any damage to them during construction.

C. All dimensions to face of curb or edge of concrete unless otherwise noted.

D. All pavement markings depicting parking spaces, accessible parking spaces, access aisles and no parking signage shall be applied with mechanical equipment and templates at the locations and lengths shown on the plans (two coats all locations). Paint shall be yellow in color (unless otherwise specified) and shall meet all applicable requirements of state department of highway specifications, unless otherwise specified.

E. Contractor shall be solely responsible for and take all precautions necessary to avoid damage to adjacent properties during the construction phases of this project.

F. All construction methods and materials must conform to current standards and specifications of the federal, state, county, city or local requirements, whichever has jurisdiction.

G. All excavated and/or disturbed areas indicated as "grass area" (per keyed note #1), are to be seeded with a locally adaptive turf seed mix after finish grading unless otherwise noted. All newly seeded areas shall have a minimum of 6" of topsoil. Hold soil down 1" from pavement elevation. Contractor to supply straw mulch where grass seed has been planted.

H. All radii indicated on plans shall be constructed as circular.

I. Resurface or reconstruct at least to original conditions all areas where traffic by contractors, subcontractors or suppliers have damaged existing pavement, lawns or other improvements during construction, after construction work is complete.

J. The contractor shall verify all dimensions and elevations in the field prior to the start of construction. The contractor shall be responsible for all field dimensions and elevations during the entire construction schedule. If any discrepancies are found in these plans from actual field dimensions, the contractor shall contact the engineer immediately.

REV	DATE	DESCRIPTION	DWN BY	DES BY	CHK BY	APP BY

ISSUE DATE 01/04/2016 SCALE 1" = 50' CTR INT. 2'
SURVEYED BY CGM CHECKED BY KJB
DRAWN BY EGW APPROVED BY MJB

Diversified Engineering Inc.
CONSULTING ENGINEERS & SURVEYORS
175 RAY AVENUE, N.E.
NEW PHILADELPHIA, OH 44663
Phone: (330) 364-1831
Fax: (330) 343-5151
e-mail: dei@dei-eng.com
Web: www.dei-eng.com

WASTE MANAGEMENT

PROJECT: TRUCK MAINTENANCE FACILITY GERMANTOWN, WI

SHEET TITLE: SITE IMPROVEMENT PLAN

SHEET NO: C1.4

JOB NO: ENG-1465

CONCEPTUAL EXTERIOR ELEVATION (WEST ELEVATION)
SCALE: 3/16" = 1'-0"

CONCEPTUAL EXTERIOR ELEVATION (NORTH ELEVATION)
SCALE: 3/32" = 1'-0"

ISSUE DATE	12/18/2018	SCALE	AS NOTED	CTR INT.	--
SURVEYED BY	---	CHECKED BY	NJB		
DRAWN BY	BWS	APPROVED BY	NJB		

REV	DATE	DESCRIPTION	DWN BY	DES BY	CHK BY	APP BY

Diversified Engineering Inc.
CONSULTING ENGINEERS & SURVEYORS
175 RAY AVENUE, N.E
NEW PHILADELPHIA, OH 44663
Phone: (330) 364-1631
Fax: (330) 364-4031
e-mail: dei@div-eng.com
Web: www.div-eng.com

WASTE MANAGEMENT

PROJECT:
TRUCK MAINTENANCE FACILITY
GERMANTOWN, WI

SHEET TITLE:
CONCEPTUAL EXTERIOR ELEVATION
RENDERINGS (OPTION #1 - REV3)

SHEET NO:
A2.0

Existing Site Photos

Address sign at WM Port-o-let entrance. (July 2018)

Abandoned underground storage tank. (Dec. 2018)

Existing Site Photos

Port-o-let maintenance garage, currently abandoned. (Dec. 2018)

Port-o-let facility maintenance garage. Used for painting and welding only.

Existing Site Photos

Existing asphalt lot.

Interior of WM Port-o-let maintenance building. (July 2018)

Existing Site Photos

Interior of WM Port-o-let maintenance building. (July 2018)

Various containers and vehicle storage on back lot. (July 2018)

Existing Site Photos

Various containers being stored on back lot. (July 2018)

Various containers and vehicles being stored on back lot. (July 2018)

Existing Site Photos

View of development area facing northeast. Currently vacant. (July 2018)

View of development area facing north. (July 2018)

Existing Site Photos

Existing burn-off flare and maintenance building. (July 2018)

Existing gravel roadway to flare and maintenance building. (July 2018)

Existing Site Photos

Existing leachate management facility. (July 2018)

Leachate management facility. (July 2018)

Existing Site Photos

Existing retention pond. (Dec. 2018)

Existing retention pond. (Dec. 2018)

Existing Site Photos

View of existing conditions facing northwest. (Dec. 2018)

View of Port-o-let facility from the northeast. (Dec. 2018)

Existing Site Photos

View facing east from proposed development area. (Dec. 2018)

Storage of containers at Port-o-let facility. (Dec. 2018)

Existing Site Photos

Existing lot at Port-o-let facility. (Dec. 2018)

Port-o-let facility entrance. (Dec. 2018)

Existing Site Photos

Container storage on existing dirt lot to north of medical waste facility. (Dec. 2018)

Existing asphalt drive. View facing southwest. (Dec. 2018)

Proposed Site Photos

Exterior elevation.

Exterior elevation.

Proposed Site Photos

Proposed truck maintenance garage.

Proposed launch area.

Proposed Site Photos

CNG fueling area.

Village of Germantown, WI

SITE PLAN REVIEW SUBMITTAL PACKET

For

Waste Management
Truck Maintenance Facility

N96W13840 County Line Road
Germantown, WI 53022

January 4th, 2019

Prepared For:

WASTE MANAGEMENT

Prepared By:

Diversified Engineering Inc.
CONSULTING ENGINEERS & SURVEYORS

TABLE OF CONTENTS

General Project Information and Applications:

Attachment 1	Project Contacts and Site Information
Attachment 2	Site Plan Review Application and Checklist
Attachment 3	Statement of Design Intent
Attachment 4	Storm Water Management Report

Site Plan Typical Details

Attachment 5.1	Lighting - Fixture SA
Attachment 5.2	Lighting - Fixture SB
Attachment 5.3	Lighting - Fixture SC
Attachment 5.4	Lighting - Fixture SD
Attachment 5.5	Lighting - Fixture SE
Attachment 6.1	Landscaping Plan – Planting Plan
Attachment 6.2	Landscaping Plan – Steel Bed Edging
Attachment 6.3	Landscaping Plan – Shrub Planting
Attachment 6.4	Landscaping Plan – Perennial Planting
Attachment 7.1	Site Details – Inlet Covers
Attachment 7.2	Site Details – Inlet Covers
Attachment 7.3	Site Details – Catch Basins
Attachment 7.4	Site Details – Catch Basins
Attachment 7.5	Site Details – Manholes
Attachment 7.6	Site Details – Inlets
Attachment 7.7	Site Details – Inlets
Attachment 7.8	Site Details – Concrete Curb and Gutter
Attachment 7.9	Site Details – Concrete Curb Ties and Gutter Applications
Attachment 7.10	Site Details – Manholes, Manhole and Inlet Covers
Attachment 7.11	Site Details – Apron Endwalls for Culvert Pipe

Erosion and Sediment Control Typical Details

Attachment 8.1	Erosion and Sediment Control – Silt Fence
Attachment 8.2	Erosion and Sediment Control – Inlet Protection
Attachment 8.3	Erosion and Sediment Control – Tracking Pad

Project Contacts and Site Information

PROJECT OWNER:

Waste Management of Wisconsin, Inc.
PO Box 1450
Chicago, IL 60690-1450

Contact: Donald Smith, PE
Phone: (262) 806-6039
Email: dasmith@wm.com

OWNER REPRESENTATIVE/ ENGINEER:

175 Ray Ave. NE
New Philadelphia, OH 44663

Project Manager: Nick Berner, PE
Phone: (330) 364-1631
Email: nberner@div-eng.com

SITE INFORMATION:

Parcels Disturbed	GNTV_363996	GNTV_363986
Acreage	8.15 ac.	35.63 ac.
Current Zoning	M-2	M-2

ADJACENT PARCEL ZONING:

GNTV_363995*	RS-1 & B-2
GNTV_363990	RS-1
GNTV_363994	B-5
GNTV_363988	A-2
GNTV_363985	M-2
GNTV_362985	A-1
GNTV_363999*	M-2
GNTV_363997*	M-2

Note: (*) Indicates parcels owned by Waste Management of WI, Inc.

FEMA INFORMATION:

Community Number	550472
Panel #	0379
Suffix	D
Date of FIRM	11/20/2013
FIRM Zone	A
Base Flood Elevation	769 FT.

SITE PLAN REVIEW CHECKLIST

Pursuant to Section 17.43 of the Municipal Code

This checklist provides a summary of requirements found in the Municipal Code. It is intended purely as a guide for developers and should not substitute for a full review of the Code and applicable regulations. (Revised 1/02)

GENERAL INFORMATION

- [X] Provide Completed Checklist with submittal
- [X] Names and addresses of owner/developer/designer
- [X] Graphic scale, north arrow
- [X] Location sketch
- [X] Size of site (gross and net acreage)
- [X] Existing zoning
- [X] Adjacent zoning and uses
- [X] Number of residents (subdivisions)
- [X] Number of employees

EXISTING SITE INFORMATION

- [X] Dimensions of site and lot lines (pipes found, pipes set, monuments)
- [X] Existing grades (2' contours minimum)
- [X] Adjacent property grades (within 10' minimum of property lines)
- [X] Adjacent structures (within 20' minimum of property lines)
- [X] Drainage systems and structures
- [X] Natural features (woods, streams, lakes, ponds, outcroppings)
- [X] Wetland boundaries (provide date of staking)
- [X] Floodplain elevation and boundaries
- [X] Environmental concerns (underground tanks, etc)
- [X] Roads, curbs, parking lots, pavement areas
- [X] Structures (location, size)
- [X] Rights-of-Way (existing/ultimate)
- [X] Easements (drainage, utility)
- [X] Existing utilities (sanitary, water, electric, gas, telephone)
- [X] Benchmark locations and elevations
- [X] Location of fences, wells, borings, etc.

ARCHITECTURAL PLANS

- [X] Existing building location
- [X] Existing building elevations/materials
- [X] Proposed use (use list from Section 17.45)
- [X] Statement of design intent (narrative)
- [X] Proposed floor plans (dimension)
- [X] Square footage (total and individual rooms/stores)
- [X] Proposed elevations (dimension)
- [X] Proposed building height
- [X] Proposed materials and colors (material sample board required for new construction)
- [X] Proposed signage (elevations, color, square footage, height, construction material, lighting)
- [X] Details of any special features

PROPOSED SITE PLAN

- [X] Grading and spot elevations
- [X] Erosion control measures (silt fencing, hay bales, rip-rap, tracking mat, stockpile locations)
- [X] Stormwater management
  - stormwater management design report
  - general drainage pattern
  - swales w/ arrows for direction of flow
  - pond design with outfalls
  - culverts (location/size)
- [X] Utilities (size, invert elevations, length, slope, etc.)
  - -- sanitary
  - -- water
  - -- stormsewer
- [X] Building location (dimension)
- [X] Building elevation (finished grade)
- [X] Location of proposed signage
- [X] Details of outside storage (including trash receptacles)
- [X] Setbacks (clearly marked and dimensioned)
- [X] Vehicular entrances (dimension to centerline of nearest intersection)
- [X] Streets (dimension and direction for one-ways)
- [X] Curve radii
- [X] Sidewalks (dimension)
- [X] Parking areas (show striping/spot elevations)
- [X] Parking setback from property line
- [X] Loading areas (dimension)
- [X] Lot coverage
  - Square footage total
  - Impervious surfaces total (%)
  - Green space total (%)
  - Percent permitted (over/under %)
- [X] Municipal utility connections
  - Sanitary sewer (pipe size/elevations)
  - Water (size, valve location, elevations)
  - Location of hydrants
- [X] Easement for public water mains

LIGHTING PLAN

- [x] Major improvements for context
- [x] Location/nature of existing fixtures
- [x] Location of proposed fixtures
- [x] Photometric report (to scale on plan)
- [x] Manufacturers cut-sheets of all fixtures
- [x] Lighting schedule
  - key to plan
  - number/type of fixtures
  - output (wattage)
- [x] Installation details as appropriate

LANDSCAPING PLAN

- [x] Major improvements for context (building, drives, walks)
- [x] Proposed outdoor amenities (benches, paths, etc.)
- [x] Existing vegetation
  - Species
  - Size
  - Approximate canopy in plan
- [x] Vegetation to be destroyed
  - List and show location
- [x] Proposed method of saving existing vegetation during construction
- [x] Proposed landscape features (berms, fountains)
- [x] Existing/proposed lighting
- [x] Irrigation/watering systems (locate outlets)
- [x] Plant lists or schedules
  - Keyed to plan
  - Number of each species
  - Size when planted (caliper)
- [x] Installation details/staking

MODEL SUBMITTAL INCLUDES THE FOLLOWING PLANS:

1. Cover / Title Page
2. Existing Conditions Survey
3. General Site Plan
4. Grading, Paving & Erosion Control Plan
5. Utility Plan
6. Site Details (curbing, catch basins, detention ponds, pavement, erosion control and sign details)
7. Landscape Plan
8. Landscape details (planting schedule, berming cross-sections, method of installation)
9. Lighting Plan
10. Floor Plan
11. Exterior Building Elevations
12. Building Material Sample Board

In addition to the items on this list, Village Staff and/or the Plan Commission may require additional drawings and data to be submitted for approval.

If any public improvements or work is to be done in the Public Right-of-Way, the Village will require that a Developer's Agreement be submitted and approved by the Village Board.

ADJACENT PARCEL ZONING:

GNTV_363995*	RS-1 & B-2
GNTV_363990	RS-1
GNTV_363994	B-5
GNTV_363988	A-2
GNTV_363985	M-2
GNTV_362985	A-1
GNTV_363999*	M-2
GNTV_363997*	M-2

Note: (*) Indicates parcels owned by Waste Management of WI, Inc.

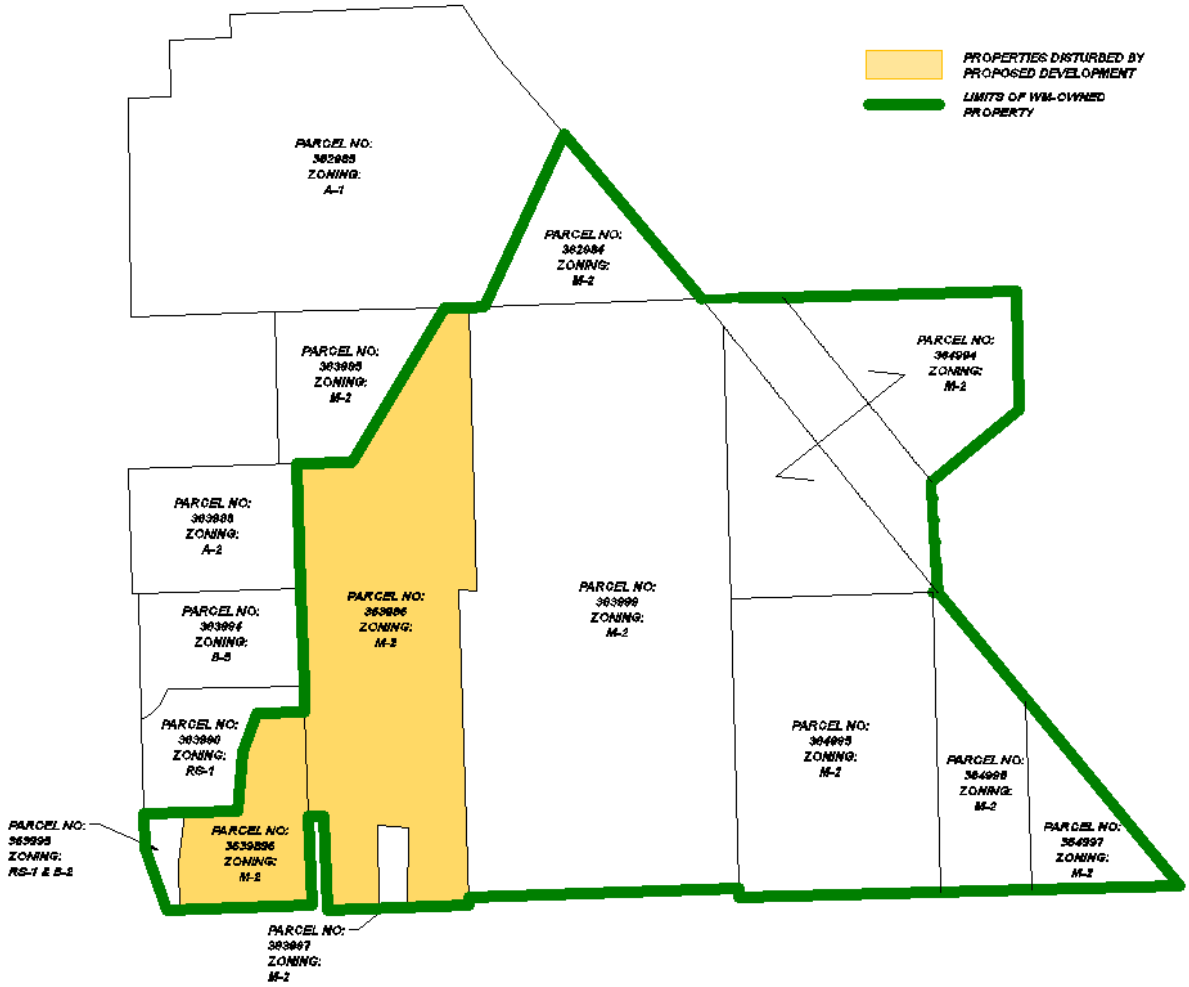

Diversified Engineering Inc.
CONSULTING ENGINEERS & SURVEYORS

January 4, 2019

Statement of Design Intent

Project: Waste Management – Germantown Truck Maintenance Facility

The Germantown Truck Maintenance Facility has been designed to match the surrounding campus of various industrial buildings owned and operated by Waste Management. Most notably in design materials, color pallet and façade. Additional design considerations have been incorporated with intent of improving site safety and appearance as well as minimize operational noise.

The building has been set approximately five hundred feet north from County Line Rd, to allow the existing dilapidated structure and staging area can be removed and replaced. The proposed design incorporates additional green space, landscaped berms and tree lined employee parking area in the place of the existing structure and storage areas. The landscaping berm has been set back from County Line Rd approximately 80-90 feet to allow for additional visibility for on-coming maintenance vehicle traffic.

Maintenance vehicle parking has been located at the north end of the parcel with a dedicated drive to the northeast connecting to the existing drive along the eastern edge of the property. The parking area has been designed to incorporate pull through and back in spaces to reduce noise during morning vehicle launches, by ensuring vehicles first move is forward. The dedicated drive to the northeast allows for vehicles to access County Line Rd at an existing pronounced intersection that features added sight distance.

Sincerely,

Nicholas J. Berner, P.E.
Project Manager

175 Ray Ave. N.E. New Philadelphia, OH 44663 - Phone: 330-364-1631 - Fax: 330-364-4031 - Email: dei@div-eng.com

STORM WATER MANAGEMENT PLAN REPORT: GERMANTOWN TRUCK MAINTENANCE FACILITY

Abstract

The following report documents the analysis performed to assess the suitability of the proposed hydraulic control mechanisms at Waste Managements' Germantown Hauling Facility.

Prepared by:

Diversified Engineering Inc.
CONSULTING ENGINEERS & SURVEYORS

175 RAY AVE NE
NEW PHILADELPHIA, OH 44663

Diversified Engineering Inc.
CONSULTING ENGINEERS & SURVEYORS

PHONE: 330-364-1631
FAX: 330-364-4031
EMAIL: div@div-eng.com

TABLE OF CONTENTS

1.0 Narrative Description 2
1.1 Site Location 2
1.2 Description of Existing and Proposed Conditions 2
1.3 Methods used for analysis 3
2.0 Hydrology Calculations: 3
2.1 Drainage Area 3
2.2 Curve Number & Runoff 4
2.3 Time of Concentration 4
2.4 Peak Flows 4
2.5 Detention Pond Sizing 5
2.6 Detention Pond Elevation – Storage Curve 6
2.7 Outlet Structures 6
2.8 Hydrograph Development 6
2.9 Critical Duration Analysis 7
Appendix A – Site Information Exhibits: 9
Appendix B – Site Soils Information 10
Appendix B – Site Soils Information 11
Appendix B – Site Soils Information 12
Appendix B – Site Soils Information 13
Appendix C – Pre-Development Hydrology 14
Appendix D – Pond & Outlet Structure Details 18
Appendix E –Post-Development Hydrology 24
Appendix F –Post-Development Detention & WQ Results 28

175 RAY AVE NE
NEW PHILADELPHIA, OH 44663

Diversified Engineering Inc.
CONSULTING ENGINEERS & SURVEYORS

PHONE: 330-364-1631
FAX: 330-364-4031
EMAIL: div@div-eng.com

1.0 Narrative Description

1.1 Site Location

The proposed development is located in Germantown Village in Washington County, Wisconsin. The project location is directly northwest of the intersection between County Line Rd & Fond Du Lac Ave. The approximate site coordinates are: Latitude: 43.193202° & Longitude: -88.080141°. The site is located in the Menomonee River Watershed.

1.2 Description of Existing and Proposed Conditions

The existing site is located along the north side of County Line Rd in Washington County, Wisconsin. The existing site is a combination of developed / undeveloped areas. The developed areas are currently occupied by Waste Management's Port-o-let division's garage, office, and storage area. The undeveloped area consists of meadowland and wooded areas. There is currently a detention pond located on the north end of the site that is utilized by NE neighboring parcel, upgrading and continued usage of this pond is included in the site development.

The proposed development is for the construction of a Waste Management truck maintenance facility (250' x 100') and office space (75' x 130') along with concrete parking areas for employees and operations vehicles. The existing detention pond on the north edge of the property is to be upgraded and maintained, along with the construction of an additional stormwater detention pond along the western side of the parcel.

The existing impervious area owned and operated by WM-Port-O-Let division is to be removed and replaced with a site access drive and green area. Due to the reduction of impervious surface in this section of the development, this sub-basin (labeled Sub-Basin I on the site plan - see Appendix A) is not planned to drain to a stormwater detention facility but instead will expected to infiltrate the newly developed "green areas" or sheet flow to the existing channel located along the western edge of the parcel.

175 RAY AVE NE
NEW PHILADELPHIA, OH 44663

Diversified Engineering Inc.
CONSULTING ENGINEERS & SURVEYORS

PHONE: 330-364-1631
FAX: 330-364-4031
EMAIL: div@div-eng.com

1.3 Methods used for analysis

The volumetric design procedure was utilized to achieve the required stormwater performance standards set forth by the Milwaukee Metropolitan Sewer District. The volumetric design procedure analyzes the existing and future flow conditions for both the 1% (100 year) and 50% (2 year) storm event. "The volumetric design procedure ensures the total volume of runoff from the proposed site is limited to the total volume of runoff discharging from the existing site during a prescribed critical time period" (Milwaukee Metropolitan Sewer District, Ch. 13).

Stormwater calculations used during the volumetric design procedure follow USDA's technical release 55. The subsequent sections follow throw each step of the design procedure, from peak flow determination, hydrograph development, and detention pond sizing.

2.0 Hydrology Calculations:

2.1 Drainage Area

The drainage area for the proposed development totals 21.43 acres and can be split into 3 separate sub-basin areas. The sub-basins are labelled I – III, and can be seen on the on hydraulic site plan (Appendix A). The land use for each sub-basin area is broken down in sub-sequent sections during the curve number calculations for both the existing (Appendix B) & developed site (Appendix D). Impervious areas are being added and removed across the site, the increase (or decrease) in impervious areas for each sub-basin are presented below in Table 1.

Table 1. Impervious Area

Sub-Basin	Existing Acreage	Developed Acreage
I	1.899	1.275
II	0	2.83
III	0.731	6.42

175 RAY AVE NE
NEW PHILADELPHIA, OH 44663

Diversified Engineering Inc.
CONSULTING ENGINEERS & SURVEYORS

PHONE: 330-364-1631
FAX: 330-364-4031
EMAIL: div@div-eng.com

2.2 Curve Number & Runoff

The volumetric design procedure evaluates the 2 year and 100 year storm event to ensure the proposed development does not increase the site's runoff volume. The rainfall amount for both storm events were gathered from NOAA Atlas 14 and are presented in Table 2 below.

Table 2 - Rainfall Amounts	
Recurrence Interval	Rainfall Amount (in.)
2 year, 24 Hour	2.65
100 year, 24 Hour	6.41

The proposed development can be broken up into 3 separate sub-basins. The sub-basins can be seen in Appendix A – Site Plan. The southernmost sub-basin, consists of the demolition of the existing asphalt and building spaced currently occupied by WM's Port-O-Let division. Due to the reduction in impervious area through this sub-basin and the limited flat space available; routing stormwater in this area through a stormwater detention facility was not justifiable. The breakdown of existing and proposed site conditions, curve numbers, and runoff associated with each sub-basin is summarized in tables in Appendix B & D. Curve numbers and runoff were determined using Carlson's Hydrology Software, which utilizes the SCS curve number method.

2.3 Time of Concentration

The time of concentration was determined using Carlson Hydrology software, which utilizes the watershed lag method outlined in Chapter 15 (Part 630) of the National Engineering Handbook. The required input parameters are: curve number, length of flow (ft), average land slope (%). The existing site and proposed site time of concentrations are summarized in Appendix B & D.

2.4 Peak Flows

The peak flows for the design storms (2YR & 100YR) were then calculated and developed using Carlson Hydrology. The software applies the SCS hydrograph procedure and utilizes the same methodology used in TR-20 to generate runoff

hydrograph's. The peak flows and calculated runoff volumes for the 2YR storm event and the 100YR storm event (pre & post development) can be found in Appendix B & D.

2.5 Detention Pond Sizing

Using peak flow rates and runoff volumes calculated previously a preliminary pond sizing was completed to get an approximate idea on the detention pond size needed. The 100YR storm event was evaluated for each sub-basin to determine the approximate pond size required. Carlson hydrology's detention pond sizing tool was utilized, this tool follows procedures outlined in TR-55 "Urban Hydrology for Small Watershed's Manual". The command requires the following inputs: Drainage Area (acres), Peak Inflow Discharge (cfs), desired peak outflow discharge (CFS), Runoff Q (inches), and storm type (Type II). Sub-Basin I was not evaluated due to the reduction in impervious area. The runoff volume and peak-flow rates decrease from pre-development to post-development negating the need for any additional stormwater detention structures in this area. Required detention pond storage volumes are presented in Tables 3 & 4 below.

Table 3. Sub-Basin II Required Detention Volume		
Drainage Area	3.824	acres
Peak Inflow Discharge	27.07	cfs
Desired Peak Outflow Discharge	20.24	cfs
Runoff Q (Post-Dev.)	5.68	inches
Storm Type	II	
Required Storage Volume	0.3715	ac-ft

Table 4. Sub-Basin III Required Detenion Volume		
Drainage Area	11.826	acres
Peak Inflow Discharge	66.49	cfs
Desired Peak Outflow Discharge	51.04	cfs
Runoff Q (Post-Dev.)	4.3	inches
Storm Type	II	
Required Storage Volume	0.824	ac-ft

175 RAY AVE NE
NEW PHILADELPHIA, OH 44663

Diversified Engineering Inc.
CONSULTING ENGINEERS & SURVEYORS

PHONE: 330-364-1631
FAX: 330-364-4031
EMAIL: div@div-eng.com

2.6 Detention Pond Elevation – Storage Curve

The preliminary detention pond sizing was utilized to ensure each pond had adequate storage capacity to pass the required design storms. The elevation storage tables for each detention pond can be seen in Appendix C. Each detention pond was design to account for 2' of sediment storage in the bottom of the pond, and to maintain a normal operating water level of at least 3' above the sediment storage elevation. Comparing the results of the elevation storage tables and the required storage tables, it can be seen that both pond sizes are adequate for the 2YR & 100YR storm events.

2.7 Outlet Structures

2'x2' Concrete outlet structures will be utilized for both detention ponds. The outlet structures sketch and typical details can be seen in Appendix C. The outlet structures both utilize a 4" drain pipe that acts as an orifice to handle flow from higher probability storm events. The top of the structure will have a grate on top of it to prevent clogging but to also allow for flow from lower probability storm events. The outlet structures are to have high performance turf reinforcement matting surrounding them to prevent erosion. A trapezoidal weir is to be utilized as an emergency overflow, in the event that the principle outlet structure clogs or is not able to function properly. The emergency spillway is situation so any flow will not be a nuisance to neighboring properties and so the resulting overflow remains on the intended water path. The emergency spillway is also to be lined with high performance turf reinforcement matting. Stage discharge curves can be seen in Appendix C.

2.8 Hydrograph Development

Hydrographs were developed for sub-basin II & sub-basin III for the following scenarios:

- 2 Year Storm Event
    - Pre-development Hydrograph (Appendix B).
    - Post-development Hydrograph (Appendix D).
    - Post-development with volumetric detention hydrograph (Appendix D/E).

175 RAY AVE NE
NEW PHILADELPHIA, OH 44663

Diversified Engineering Inc.
CONSULTING ENGINEERS & SURVEYORS

PHONE: 330-364-1631
FAX: 330-364-4031
EMAIL: div@div-eng.com

- 100 Year Storm Event
  - Pre-development Hydrograph (Appendix B).
  - Post-development Hydrograph (Appendix D)
  - Post-development with volumetric detention hydrograph (Appendix D/E).

2.9 Critical Duration Analysis

"The volumetric design procedure determines the maximum rate of runoff that can be released from a development based on the development characteristics and the timing of the overall watershed, or the critical time period. The critical time period begins at the time of maximum rainfall intensity and ends at the time of peak flow at a critical downstream location" (Milwaukee Metropolitan Sewer District, Ch. 13). The critical time period for major watercourses within the districts planning area were provided in Table 2-6 of Milwaukee Metropolitan Sewer District's Stormwater Guidance Manual, and can be seen below.

Basin	Length of Critical Period (hr.)
Fish Creek	1.5
Fox River	12
Kinnickinnic River	1.75
Lake Michigan Direct Drainage	1.5
Lincoln Creek	12
Menomonee River	9.5
Milwaukee River (1)	12
Oak Creek	15
Oak Creek (2)	6
Root River	7.75

(1) Includes Brown Deer Park Creek, Indian Creek, South Branch Creek, and Beaver Creek.

(2) Upstream of Puetz Road in the City of Oak Creek.

Table 2-6
Critical time periods for major watercourses within the District's planning area.

175 RAY AVE NE
NEW PHILADELPHIA, OH 44663

Diversified Engineering Inc.
CONSULTING ENGINEERS & SURVEYORS

PHONE: 330-364-1631
FAX: 330-364-4031
EMAIL: div@div-eng.com

This development is located in the Menomonee River Watershed, therefore a critical time period of 9.5 Hours was used in the evaluation of the detention facility. Evaluating the hydrograph's and using the critical time period of 11:00 – 20:30, it can be seen that the total routed post-development runoff rate for each design storm is equal to or less than the pre-development condition. This satisfies the detention requirement under the volumetric design procedure. The hydrographs and results from the volumetric design procedure can be seen in Appendix F.

175 RAY AVE NE
NEW PHILADELPHIA, OH 44663

Diversified Engineering Inc.
CONSULTING ENGINEERS & SURVEYORS

PHONE: 330-364-1631
FAX: 330-364-4031
EMAIL: div@div-eng.com

Appendix A – Site Information Exhibits:

SEE ATTACHED SIZE 'D' PLAN SHEETS

1. Existing Site Conditions

2. Proposed Site Plan

Appendix B - Site Soils Information

Hydrologic Soil Group—Milwaukee and Waukesha Counties, Wisconsin, and Washington County, Wisconsin
(GERMANTOWN SWMP)

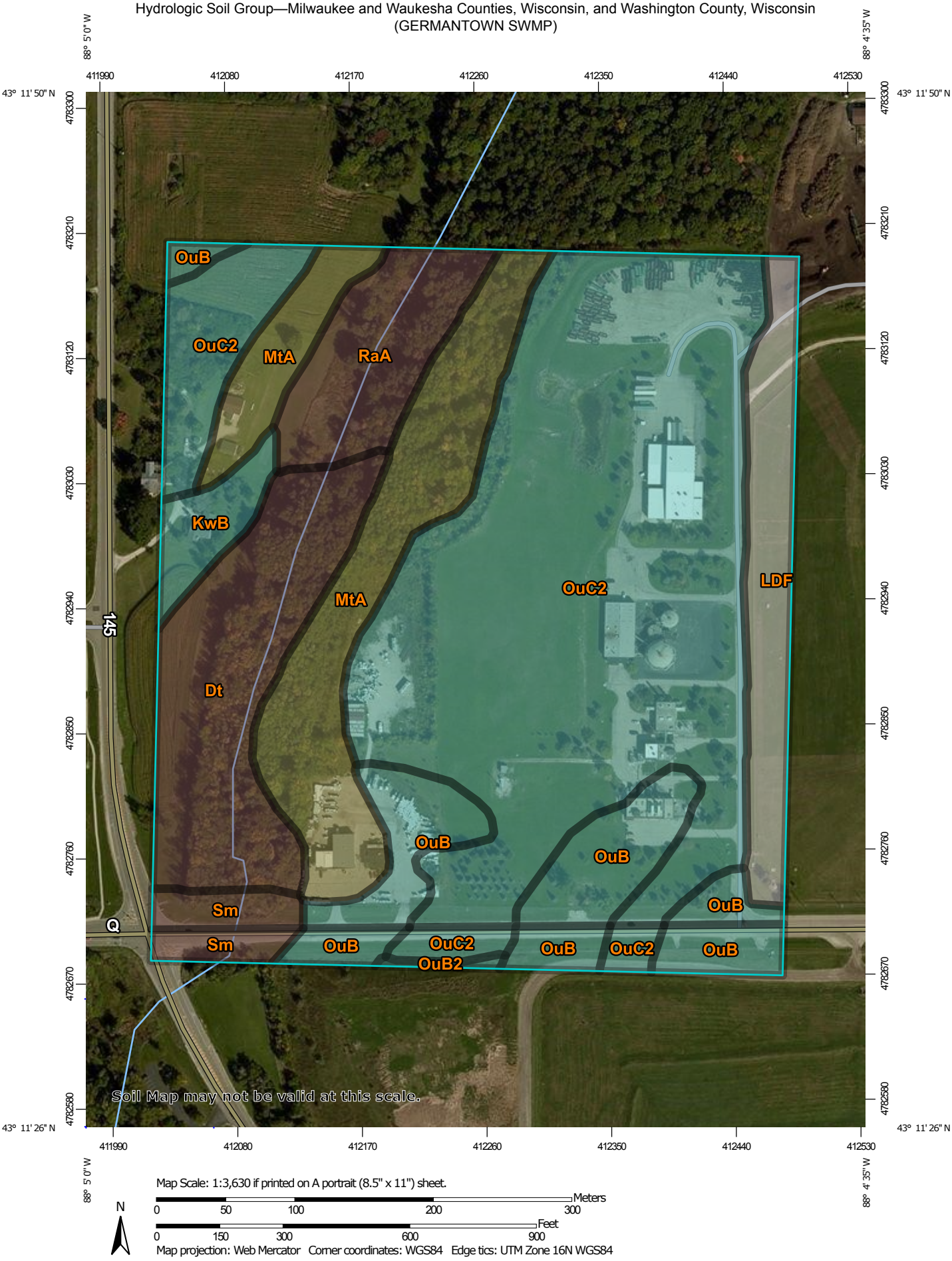

MAP LEGEND

Area of Interest (AOI)

Area of Interest (AOI)

Soils

Soil Rating Polygons

- A
- A/D
- B
- B/D
- C
- C/D
- D
- Not rated or not available

Soil Rating Lines

- A
- A/D
- B
- B/D
- C
- C/D
- D
- Not rated or not available

Soil Rating Points

- A
- A/D
- B
- B/D
- C
- C/D
- D
- Not rated or not available

Water Features

Streams and Canals

Transportation

- Rails
- Interstate Highways
- US Routes
- Major Roads
- Local Roads

Background

Aerial Photography

MAP INFORMATION

The soil surveys that comprise your AOI were mapped at 1:15,800.

Warning: Soil Map may not be valid at this scale.

Enlargement of maps beyond the scale of mapping can cause misunderstanding of the detail of mapping and accuracy of soil line placement. The maps do not show the small areas of contrasting soils that could have been shown at a more detailed scale.

Please rely on the bar scale on each map sheet for map measurements.

Source of Map: Natural Resources Conservation Service
Web Soil Survey URL:
Coordinate System: Web Mercator (EPSG:3857)

Maps from the Web Soil Survey are based on the Web Mercator projection, which preserves direction and shape but distorts distance and area. A projection that preserves area, such as the Albers equal-area conic projection, should be used if more accurate calculations of distance or area are required.

This product is generated from the USDA-NRCS certified data as of the version date(s) listed below.

Soil Survey Area: Milwaukee and Waukesha Counties, Wisconsin
Survey Area Data: Version 14, Sep 12, 2018

Soil Survey Area: Washington County, Wisconsin
Survey Area Data: Version 18, Sep 12, 2018

Your area of interest (AOI) includes more than one soil survey area. These survey areas may have been mapped at different scales, with a different land use in mind, at different times, or at different levels of detail. This may result in map unit symbols, soil properties, and interpretations that do not completely agree across soil survey area boundaries.

Soil map units are labeled (as space allows) for map scales 1:50,000 or larger.

Date(s) aerial images were photographed: Sep 7, 2014—Sep 22, 2014

Hydrologic Soil Group

Map unit symbol	Map unit name	Rating	Acres in AOI	Percent of AOI
OuB	Ozaukee silt loam, high carbonate substratum, 2 to 6 percent slopes	C	1.8	3.1%
OuB2	Ozaukee silt loam, high carbonate substratum, 2 to 6 percent slopes, eroded	C	0.1	0.2%
OuC2	Ozaukee silt loam, high carbonate substratum, 6 to 12 percent slopes, eroded	C	0.8	1.4%
Sm	Sebewa silt loam, 0 to 2 percent slopes	B/D	0.6	1.0%
Subtotals for Soil Survey Area			**3.3**	**5.7%**
Totals for Area of Interest			**58.5**	**100.0%**

Map unit symbol	Map unit name	Rating	Acres in AOI	Percent of AOI
Dt	Drummer silt loam, gravelly substratum	B/D	6.8	11.5%
KwB	Knowles silt loam, 1 to 6 percent slopes	C	1.2	2.1%
LDF	Landfill		3.6	6.1%
MtA	Mequon silt loam, 1 to 3 percent slopes	C/D	8.2	14.1%
OuB	Ozaukee silt loam, high carbonate substratum, 2 to 6 percent slopes	C	4.4	7.4%
OuC2	Ozaukee silt loam, high carbonate substratum, 6 to 12 percent slopes, eroded	C	26.8	45.8%
RaA	Radford silt loam, 0 to 3 percent slopes	B/D	3.4	5.9%
Sm	Sebewa silt loam, 0 to 2 percent slopes	B/D	0.8	1.3%
Subtotals for Soil Survey Area			**55.2**	**94.3%**
Totals for Area of Interest			**58.5**	**100.0%**

Description

Hydrologic soil groups are based on estimates of runoff potential. Soils are assigned to one of four groups according to the rate of water infiltration when the soils are not protected by vegetation, are thoroughly wet, and receive precipitation from long-duration storms.

The soils in the United States are assigned to four groups (A, B, C, and D) and three dual classes (A/D, B/D, and C/D). The groups are defined as follows:

Group A. Soils having a high infiltration rate (low runoff potential) when thoroughly wet. These consist mainly of deep, well drained to excessively drained sands or gravelly sands. These soils have a high rate of water transmission.

Group B. Soils having a moderate infiltration rate when thoroughly wet. These consist chiefly of moderately deep or deep, moderately well drained or well drained soils that have moderately fine texture to moderately coarse texture. These soils have a moderate rate of water transmission.

Group C. Soils having a slow infiltration rate when thoroughly wet. These consist chiefly of soils having a layer that impedes the downward movement of water or soils of moderately fine texture or fine texture. These soils have a slow rate of water transmission.

Group D. Soils having a very slow infiltration rate (high runoff potential) when thoroughly wet. These consist chiefly of clays that have a high shrink-swell potential, soils that have a high water table, soils that have a claypan or clay layer at or near the surface, and soils that are shallow over nearly impervious material. These soils have a very slow rate of water transmission.

If a soil is assigned to a dual hydrologic group (A/D, B/D, or C/D), the first letter is for drained areas and the second is for undrained areas. Only the soils that in their natural condition are in group D are assigned to dual classes.

Rating Options

Aggregation Method: Dominant Condition

Component Percent Cutoff: None Specified

Tie-break Rule: Higher

175 RAY AVE NE
NEW PHILADELPHIA, OH 44663

Diversified Engineering Inc.
CONSULTING ENGINEERS & SURVEYORS

PHONE: 330-364-1631
FAX: 330-364-4031
EMAIL: div@div-eng.com

Appendix C – Pre-Development Hydrology

Table C1. Existing Conditions Land Usage					
Sub-Basin	Land Use	Soil Type	Area (Acres)	CN	% Area
1	Gravel Streets / Parking Area	C	0.034	89	0.59
	Paved Lots, Roofs, Driveways	C	1.899	98	32.87
	Woods (Fair)	C	0.355	73	6.14
	Meadow	C	3.49	71	60.40
	TOTALS		5.778	80.1	100
2	Gravel Streets / Parking Area	C	1.107	89	28.95
	Woods (Fair)	C	0.76	73	19.87
	Meadow	C	1.957	71	51.18
	TOTALS		3.824	76.6	100.00
3	Pond	C	0.156	100	1.32
	Paved Lots, Roofs, Driveways	C	0.731	98	6.18
	Woods (Fair)	C	0.815	73	6.89
	Meadow	C	10.124	71	85.61
	TOTALS		11.826	73.2	100.00

Table C2. Time of Concentration	
Sub-Basin	Existing Time of Concentration (hours)
1	0.156
2	0.123
3	0.208

175 RAY AVE NE
NEW PHILADELPHIA, OH 44663

Diversified Engineering Inc.
CONSULTING ENGINEERS & SURVEYORS

PHONE: 330-364-1631
FAX: 330-364-4031
EMAIL: div@div-eng.com

Table C3. Peak Flow (2YR Storm)		
Sub-Basin	Existing Site Peak Flow (CFS)	Existing Site Runoff (inches)
1	7.82	1.00
2	4.52	0.82
3	9.426	0.66

Table C4. Peak Flow (100YR Storm)		
Sub-Basin	Existing Site Peak Flow (CFS)	Existing Site Runoff (inches)
1	31.6	4.61
2	20.24	3.8
3	51.048	3.45

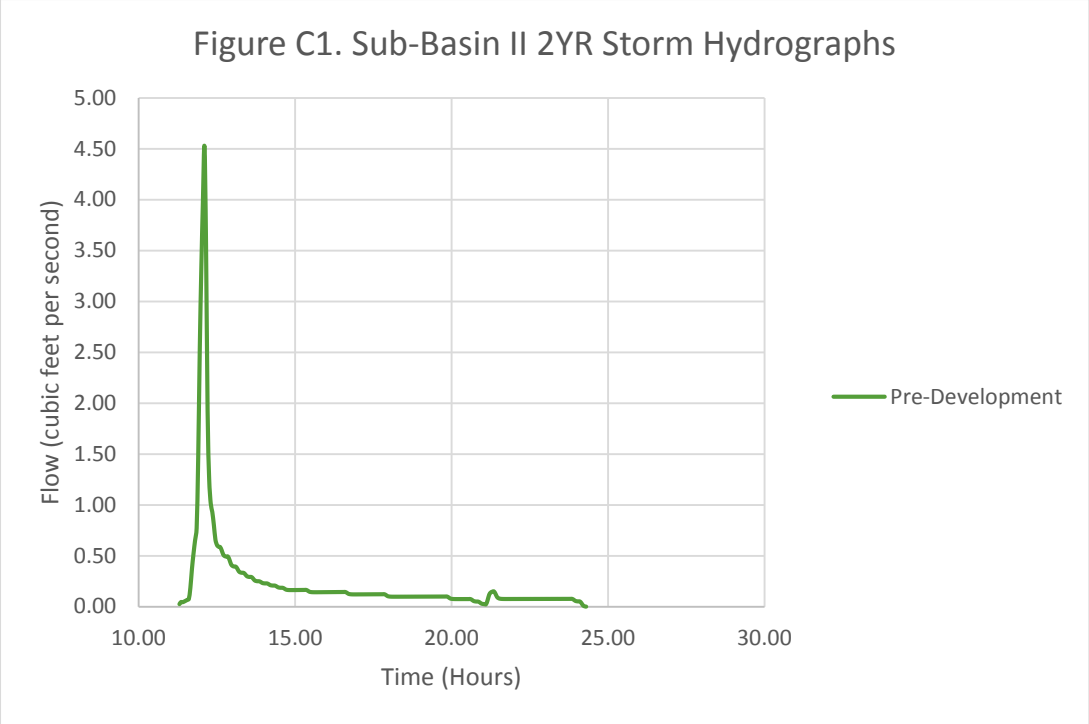

175 RAY AVE NE
NEW PHILADELPHIA, OH 44663

Diversified Engineering Inc.
CONSULTING ENGINEERS & SURVEYORS

PHONE: 330-364-1631
FAX: 330-364-4031
EMAIL: div@div-eng.com

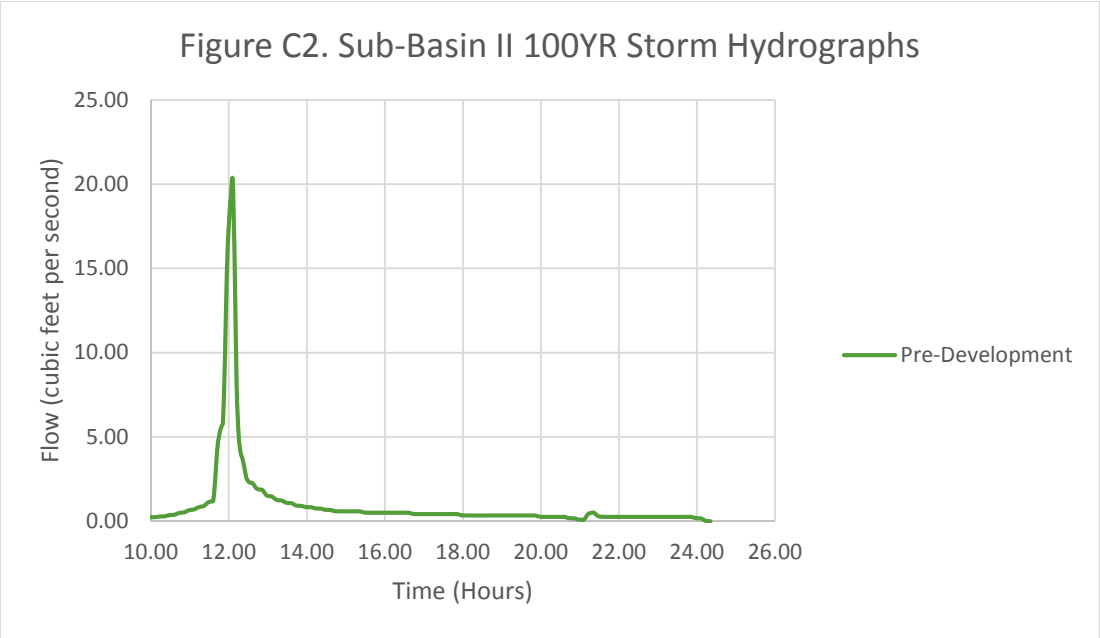

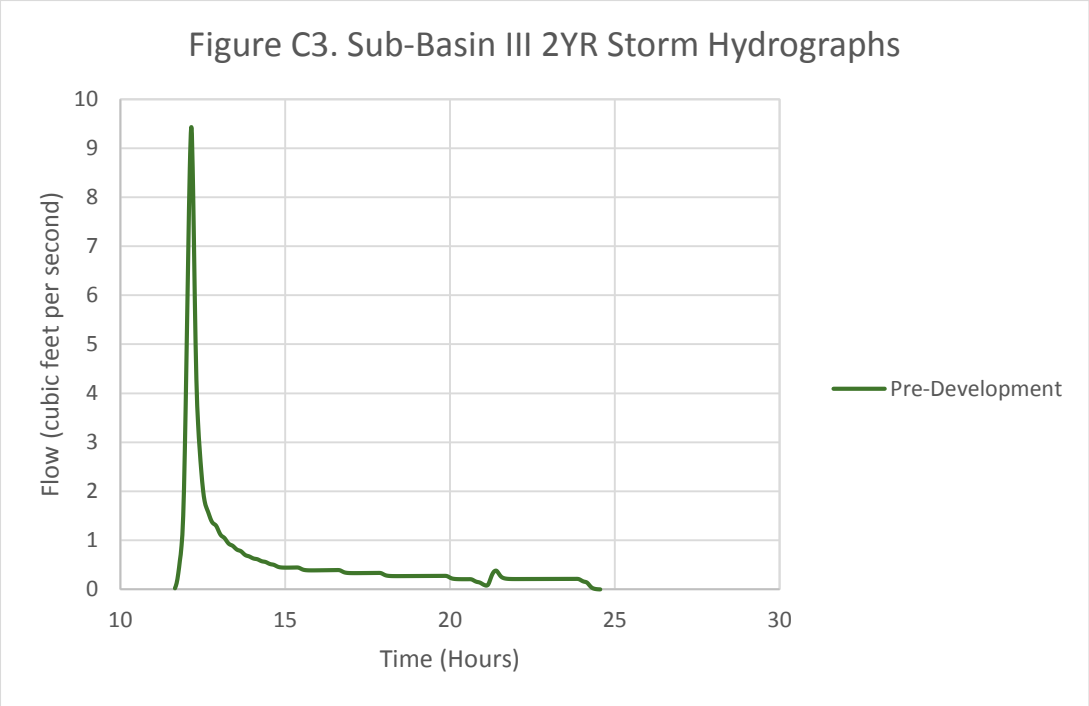

175 RAY AVE NE
NEW PHILADELPHIA, OH 44663

Diversified Engineering Inc.
CONSULTING ENGINEERS & SURVEYORS

PHONE: 330-364-1631
FAX: 330-364-4031
EMAIL: div@div-eng.com

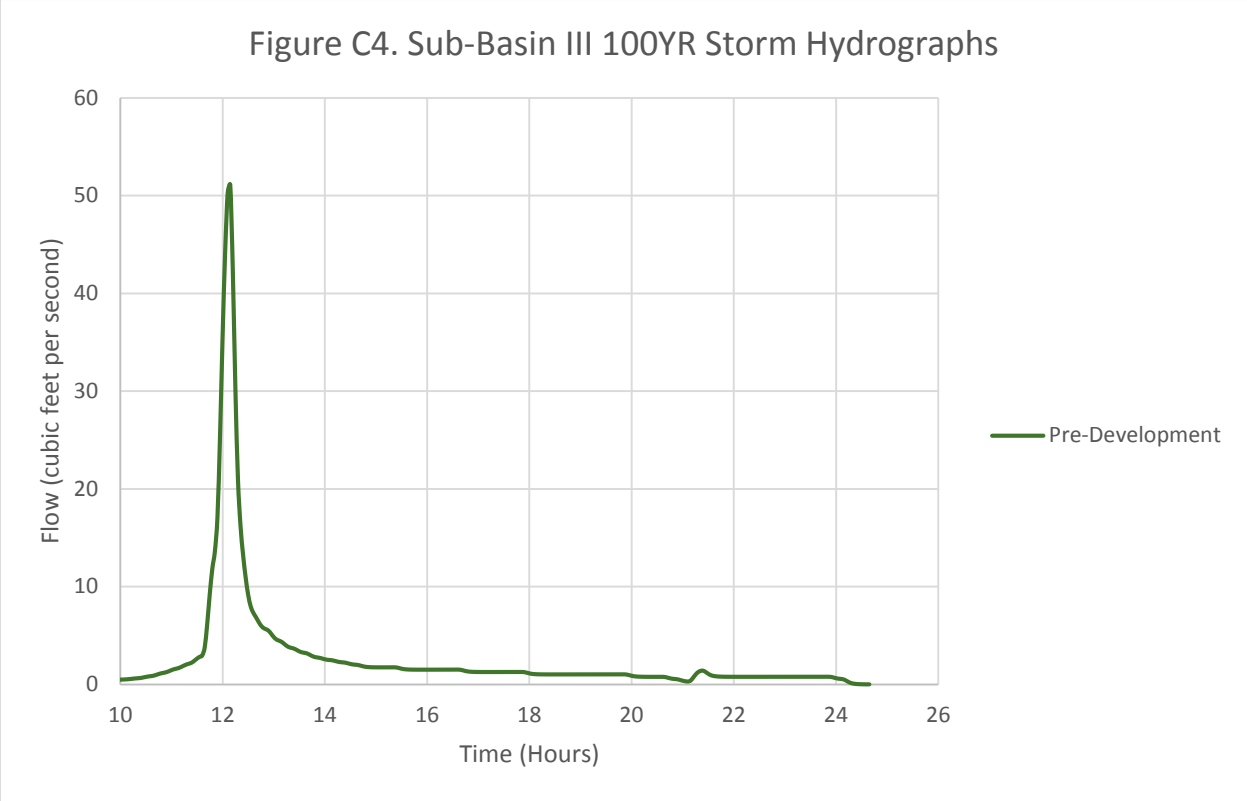

175 RAY AVE NE
NEW PHILADELPHIA, OH 44663

Diversified Engineering Inc.
CONSULTING ENGINEERS & SURVEYORS

PHONE: 330-364-1631
FAX: 330-364-4031
EMAIL: div@div-eng.com

Appendix D – Pond & Outlet Structure Details

Table D1. Elevation Storage Table - Sub-Basin II Detention Pond					
Water Elev	Storage AcreFt	Storage CY	Storage CF	Area Acres	Area S.F.
771.0	0.00	0.0	0.0	0.08	3385.4
772.0	0.09	152.4	4113.5	0.11	4870.1
773.0	0.22	362.3	9781.0	0.15	6491.1
774.0	0.39	635.1	17148.3	0.19	8269.7
775.0	0.61	976.4	26362.6	0.23	10183.7
776.0	0.87	1402.7	37871.9	0.29	12519.2
777.0	1.18	1905.9	51460.3	0.34	14693.1
Pond Bottom		769	Sediment Storage Depth		2'
Avg. Pool Elev.		774.0	Avg. Water Depth		3'
Top Elev.		777.0	Total Avg. Depth		5'

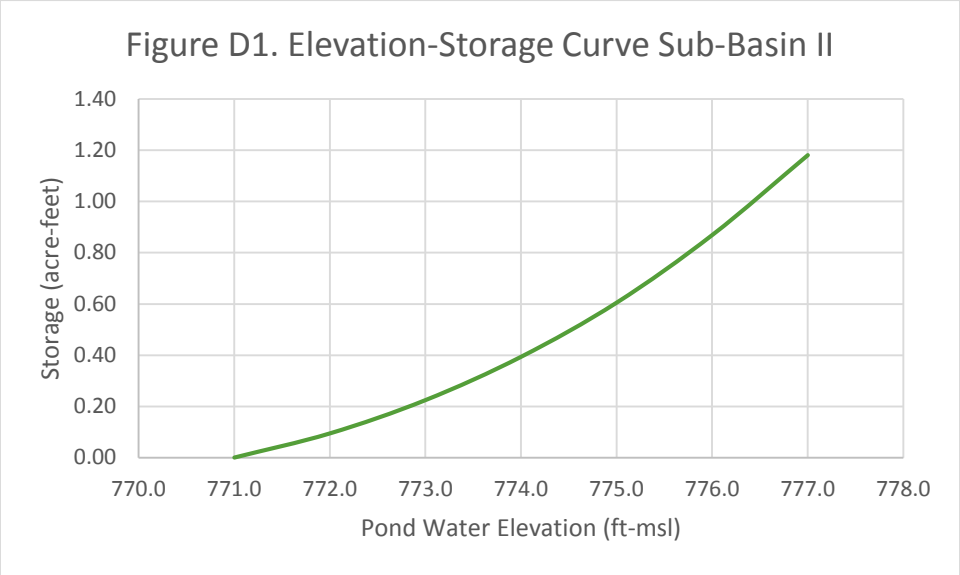

175 RAY AVE NE
NEW PHILADELPHIA, OH 44663

Diversified Engineering Inc.
CONSULTING ENGINEERS & SURVEYORS

PHONE: 330-364-1631
FAX: 330-364-4031
EMAIL: div@div-eng.com

Table D2. Elevation Storage Table - Sub-Basin III Detention Pond					
Water Elev	Storage Acre-Ft	Storage CY	Storage CF	Area Acres	Area S.F.
783.0	0.00	0.0	0.0	0.37	16199.1
784.0	0.41	660.7	17839.0	0.45	19523.9
785.0	0.91	1468.7	39653.7	0.55	23857.3
786.0	1.54	2478.0	66905.6	0.65	28501.9
787.0	2.21	3572.2	96450.7	0.70	30580.1
788.0	2.94	4742.8	128055.1	0.75	32625.4
789.0	3.71	5989.5	161715.2	0.80	34695.3
790.0	4.53	7312.8	197446.6	0.84	36768.0
Pond Bottom		781	Sediment Storage Depth		2'
Avg. Pool Elev.		786.0	Avg. Water Depth		3'
Top Elev.		790.0	Total Avg. Depth		5'

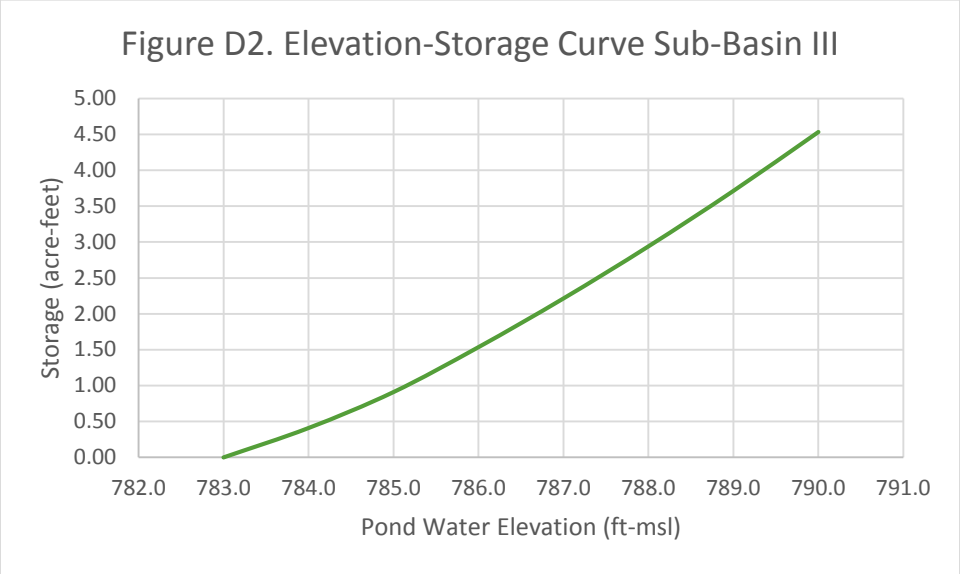

175 RAY AVE NE
NEW PHILADELPHIA, OH 44663

Diversified Engineering Inc.
CONSULTING ENGINEERS & SURVEYORS

PHONE: 330-364-1631
FAX: 330-364-4031
EMAIL: div@div-eng.com

Table D3. Elevation Storage Curve Sub-Basin II Detention Pond		
Water Elev	Stage	Discharge (CFS)
773.0	0.00	0.00
773.5	0.50	0.24
774.0	1.00	0.38
775.0	1.50	0.57
775.5	2.00	6.27
776.0	2.50	6.95
776.5	3.00	7.56
777.0	3.50	8.13

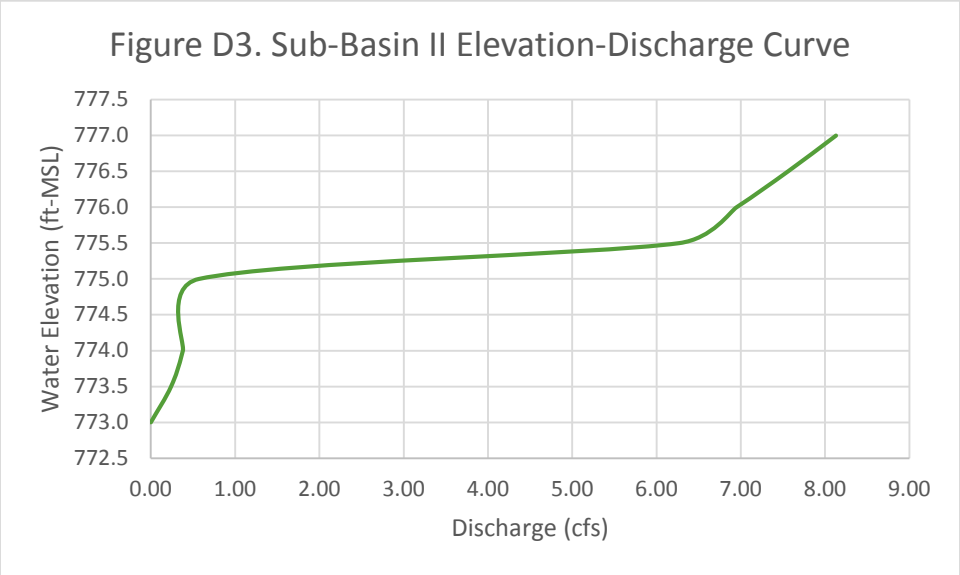

175 RAY AVE NE
NEW PHILADELPHIA, OH 44663

Diversified Engineering Inc.
CONSULTING ENGINEERS & SURVEYORS

PHONE: 330-364-1631
FAX: 330-364-4031
EMAIL: div@div-eng.com

Table D4. Elevation Storage Curve Sub-Basin II Detention Pond		
Water Elev	Stage	Discharge (CFS)
784.0	0.00	0.00
784.5	0.50	0.24
785.0	1.00	0.38
785.5	1.50	0.48
786.0	2.00	0.57
786.5	2.50	6.26
787.0	3.00	6.88
787.5	3.50	7.16
788.0	4.00	7.42
788.5	4.50	7.68
789.0	5.00	7.94
789.5	5.50	8.18
790.0	6.00	8.42

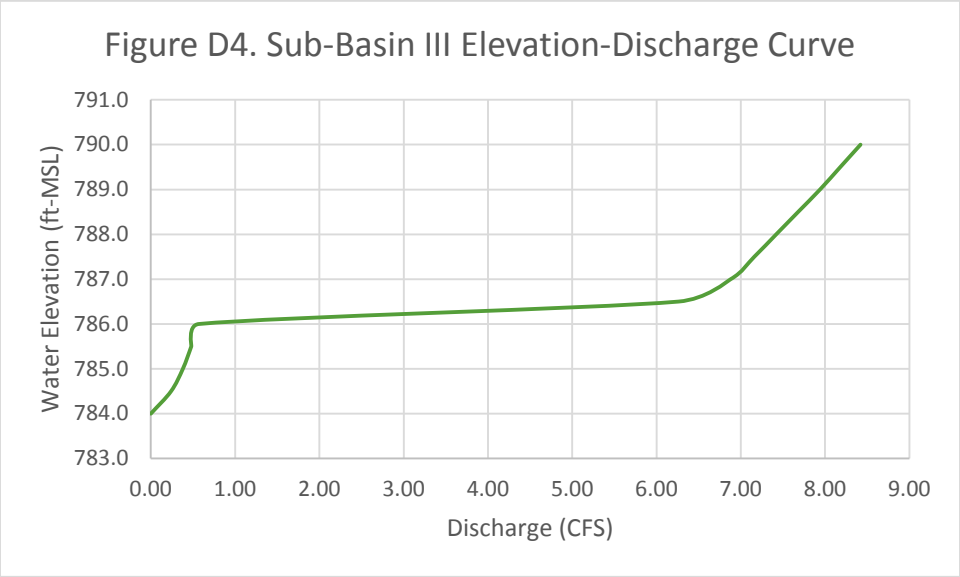

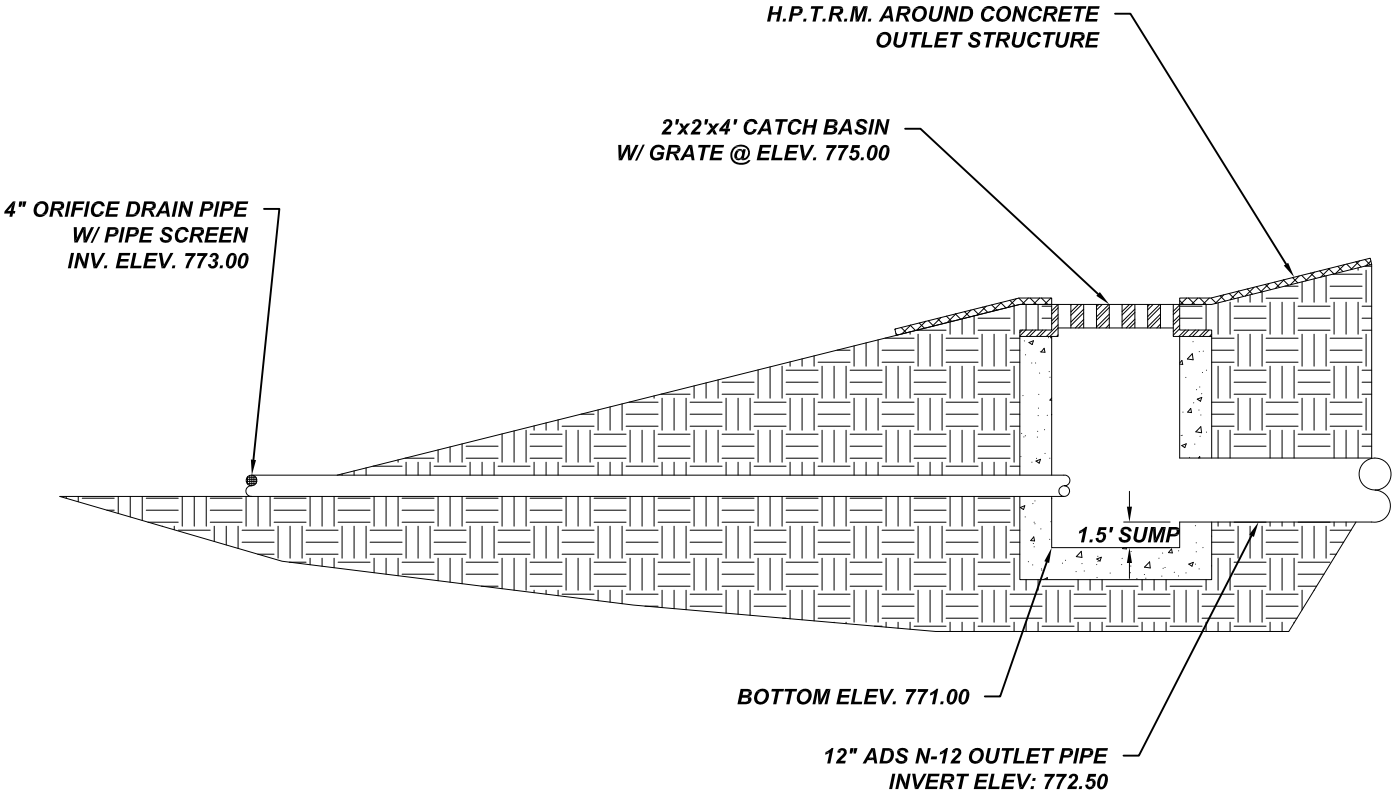

TYPICAL DETAIL

POND OUTLET STRUCTURE I

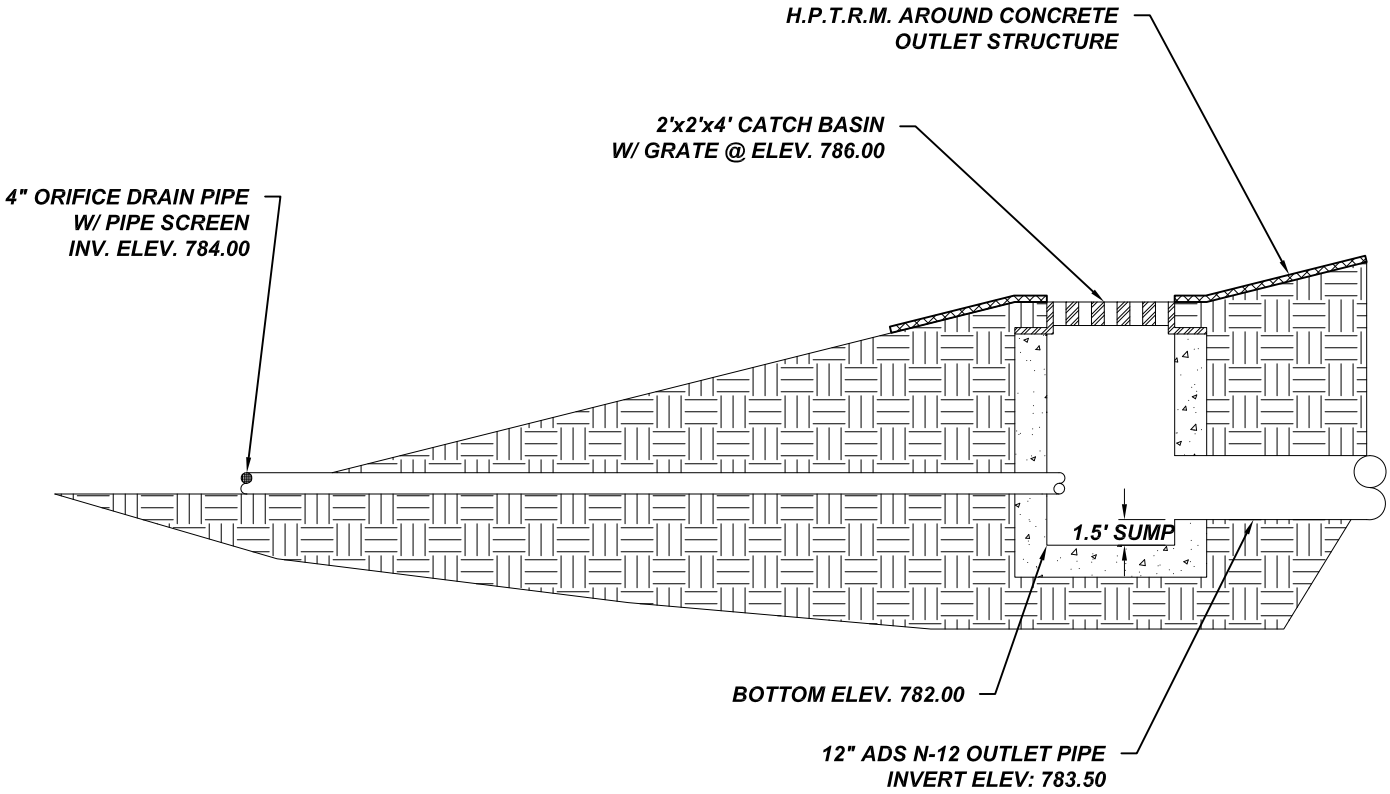

TYPICAL DETAIL

POND OUTLET STRUCTURE II

175 RAY AVE NE
NEW PHILADELPHIA, OH 44663

Diversified Engineering Inc.
CONSULTING ENGINEERS & SURVEYORS

PHONE: 330-364-1631
FAX: 330-364-4031
EMAIL: div@div-eng.com

Appendix E -Post-Development Hydrology

Table E1. Developed Conditions					
Sub-Basin	Land Use	Soil Type	Area (Acres)	CN	% Area
1	Herbaceous Mixture (fair)	C	0.202	81	3.50
	Paved Lots, Roofs, Driveways	C	1.275	98	22.07
	Meadow	C	4.301	73	74.44
	TOTALS		5.778	77.3	100
2	Herbaceous Mixture (fair)	C	0.083	81	1.99
	Paved Lots, Roofs, Driveways	C	2.83	98	68.01
	Pond	C	0.337	100	8.10
	Meadow	C	0.911	71	21.89
	TOTALS		4.161	93.8	100.00
3	Pond	C	0.558	100	4.72
	Paved Lots, Roofs, Driveways	C	6.42	98	54.29
	Meadow	C	4.848	71	40.99
	TOTALS		11.826	87	100.00

Table E2. Time of Concentration	
Sub-Basin	Proposed Conditions Time of Concentration (Hours)
1	0.214
2	0.095
3	0.155

175 RAY AVE NE
NEW PHILADELPHIA, OH 44663

Diversified Engineering Inc.
CONSULTING ENGINEERS & SURVEYORS

PHONE: 330-364-1631
FAX: 330-364-4031
EMAIL: div@div-eng.com

Table E3. Peak Flow (2YR Storm)		
Sub-Basin	Proposed Site Peak Flow (CFS)	Proposed Site Runoff (inches)
1	6.091	0.85
2	10.33	1.99
3	17.269	1.08

Table E4. Peak Flow (100YR Storm)		
Sub-Basin	Proposed Site Peak Flow (CFS)	Proposed Site Runoff (inches)
1	27.48	3.87
2	27.07	5.68
3	66.49	4.30

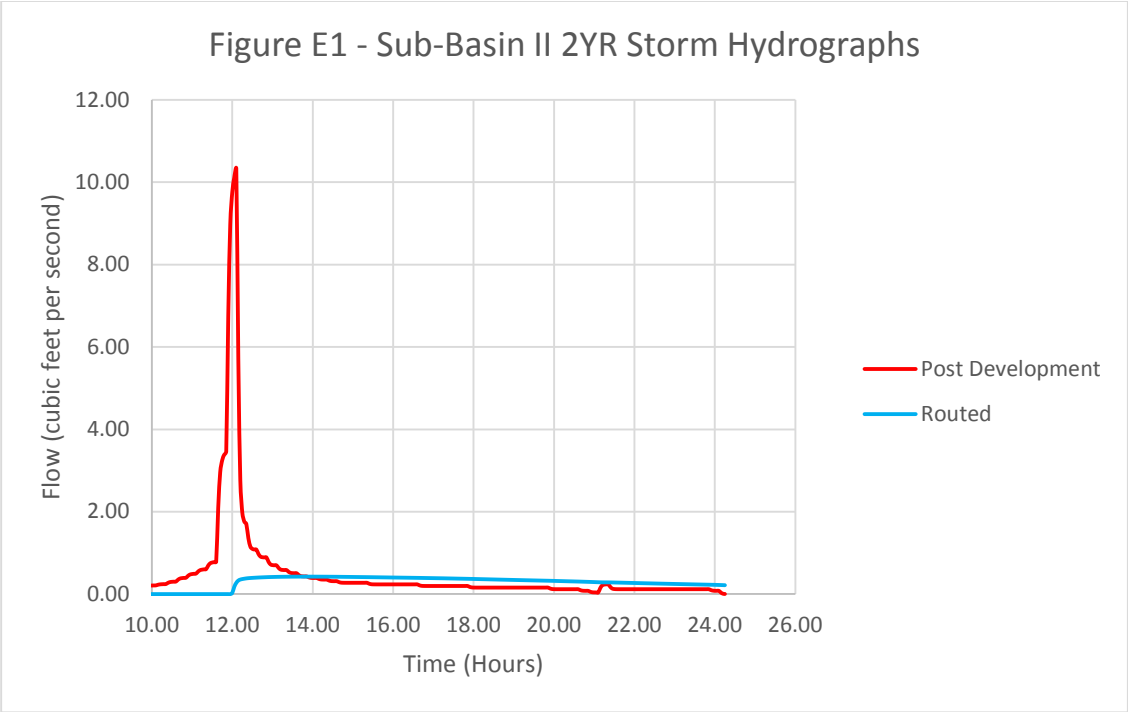

175 RAY AVE NE
NEW PHILADELPHIA, OH 44663

Diversified Engineering Inc.
CONSULTING ENGINEERS & SURVEYORS

PHONE: 330-364-1631
FAX: 330-364-4031
EMAIL: div@div-eng.com

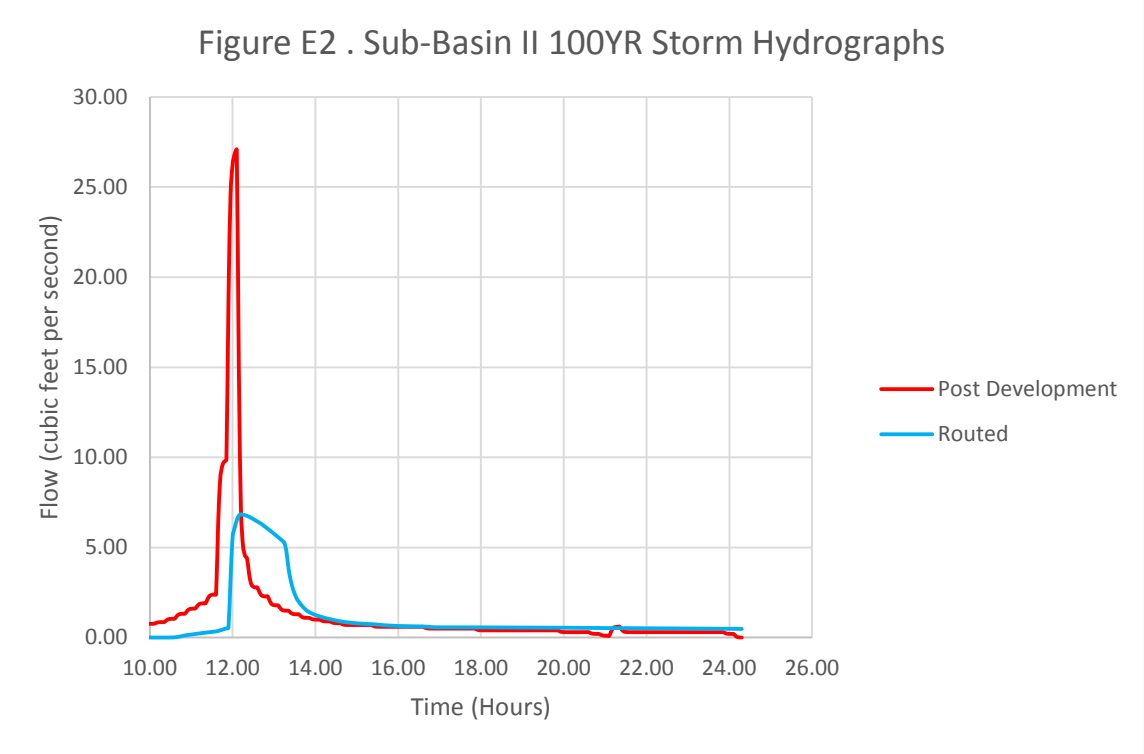

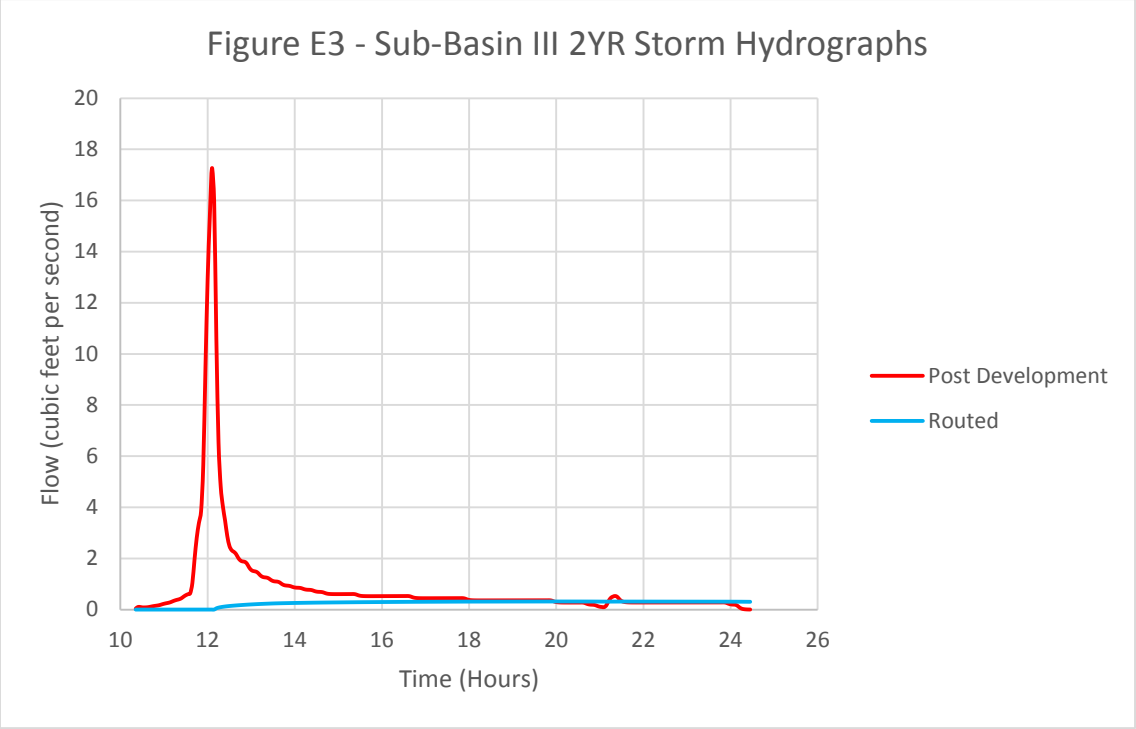

175 RAY AVE NE
NEW PHILADELPHIA, OH 44663

Diversified Engineering Inc.
CONSULTING ENGINEERS & SURVEYORS

PHONE: 330-364-1631
FAX: 330-364-4031
EMAIL: div@div-eng.com

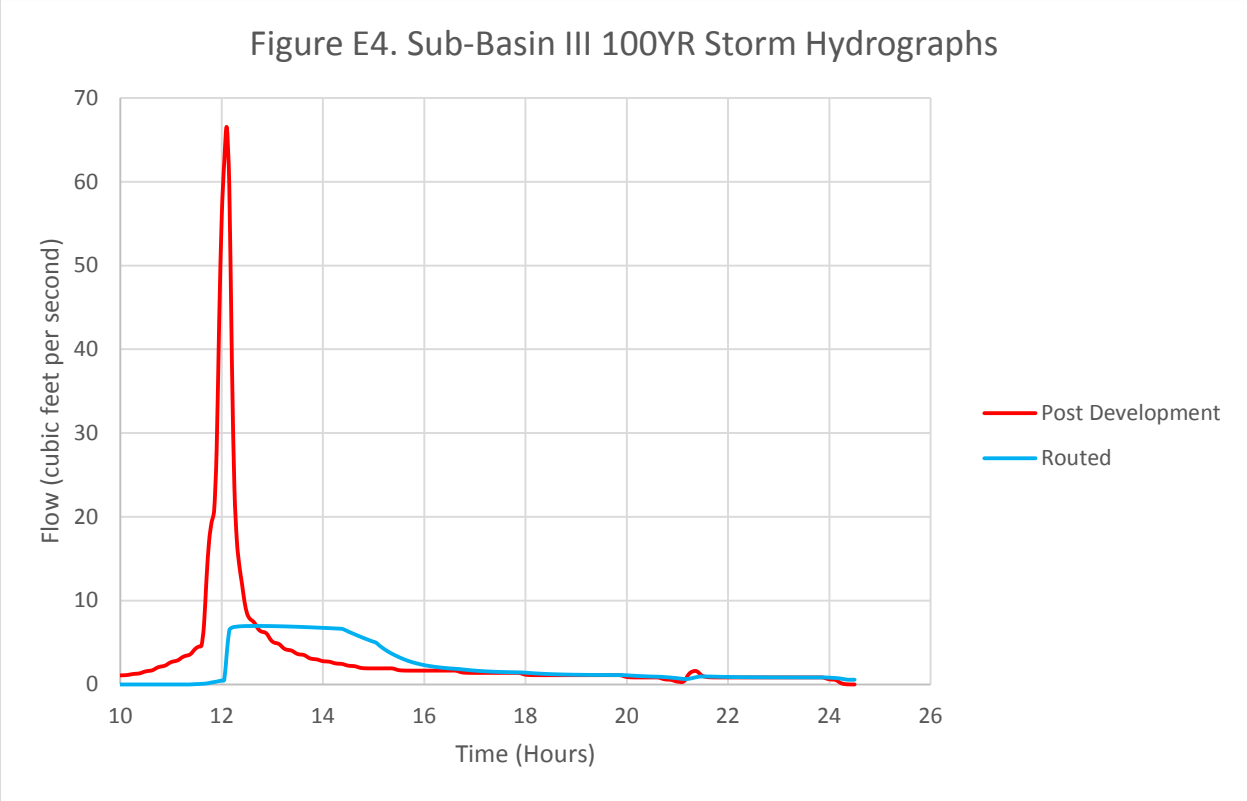

175 RAY AVE NE
NEW PHILADELPHIA, OH 44663

Diversified Engineering Inc.
CONSULTING ENGINEERS & SURVEYORS

PHONE: 330-364-1631
FAX: 330-364-4031
EMAIL: div@div-eng.com

Appendix F –Post-Development Detention & WQ Results

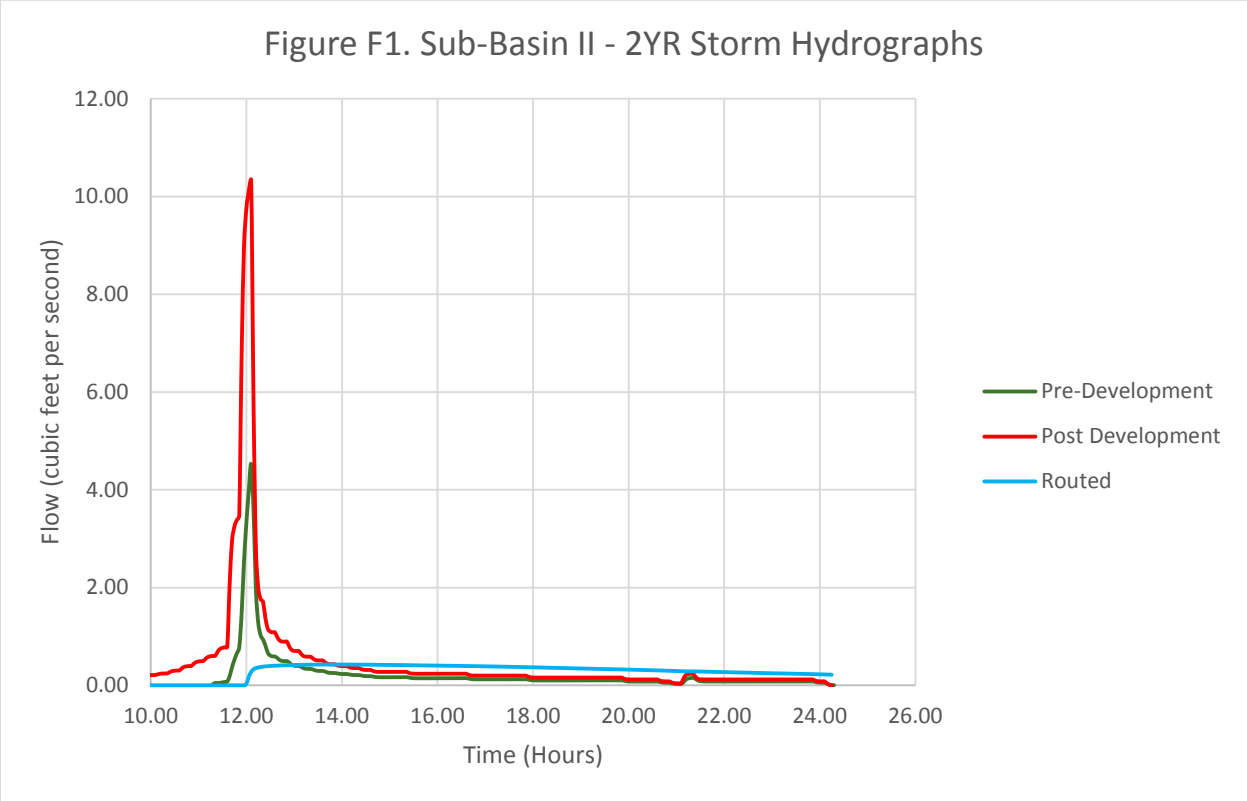

Table F1. Sub-Basin II 2YR Storm Results		
Description	Quantity	Units
Existing Peak Flow Rate	4.52	cfs
Developed Peak Flow Rate	10.33	cfs
Routed Peak Flow Rate	0.42	cfs
Max Pond Water Elevation	774.19	ft-msl
Existing Volumetric Runoff	0.27	ac-ft
Routed Volumetric Runoff	0.24	ac-ft
Critical Time Duration	9.5	hrs

175 RAY AVE NE
NEW PHILADELPHIA, OH 44663

Diversified Engineering Inc.
CONSULTING ENGINEERS & SURVEYORS

PHONE: 330-364-1631
FAX: 330-364-4031
EMAIL: div@div-eng.com

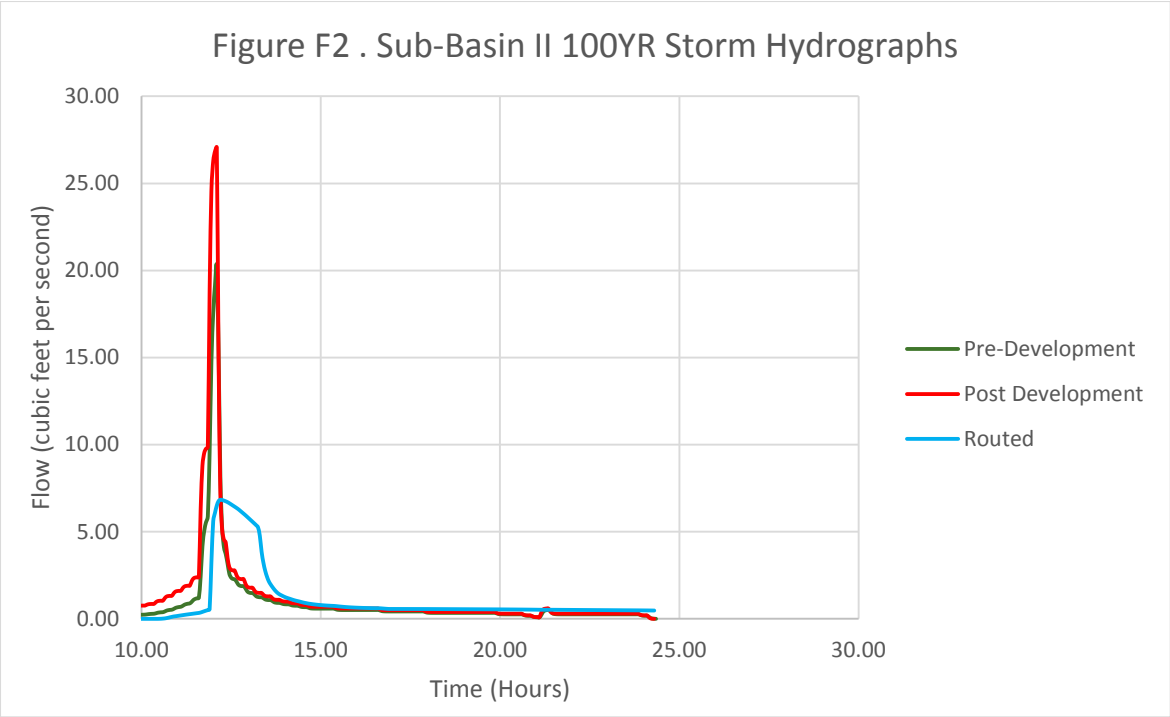

Table F2. Sub-Basin II 100YR Storm Results		
Description	Quantity	Units
Existing Peak Flow Rate	20.24	cfs
Developed Peak Flow Rate	27.07	cfs
Routed Peak Flow Rate	6.83	cfs
Max Pond Water Elevation	776.41	ft-msl
Existing Volumetric Runoff	1.19	ac-ft
Routed Volumetric Runoff	1.08	ac-ft
Critical Time Duration	9.5	hrs

175 RAY AVE NE
NEW PHILADELPHIA, OH 44663

Diversified Engineering Inc.
CONSULTING ENGINEERS & SURVEYORS

PHONE: 330-364-1631
FAX: 330-364-4031
EMAIL: div@div-eng.com

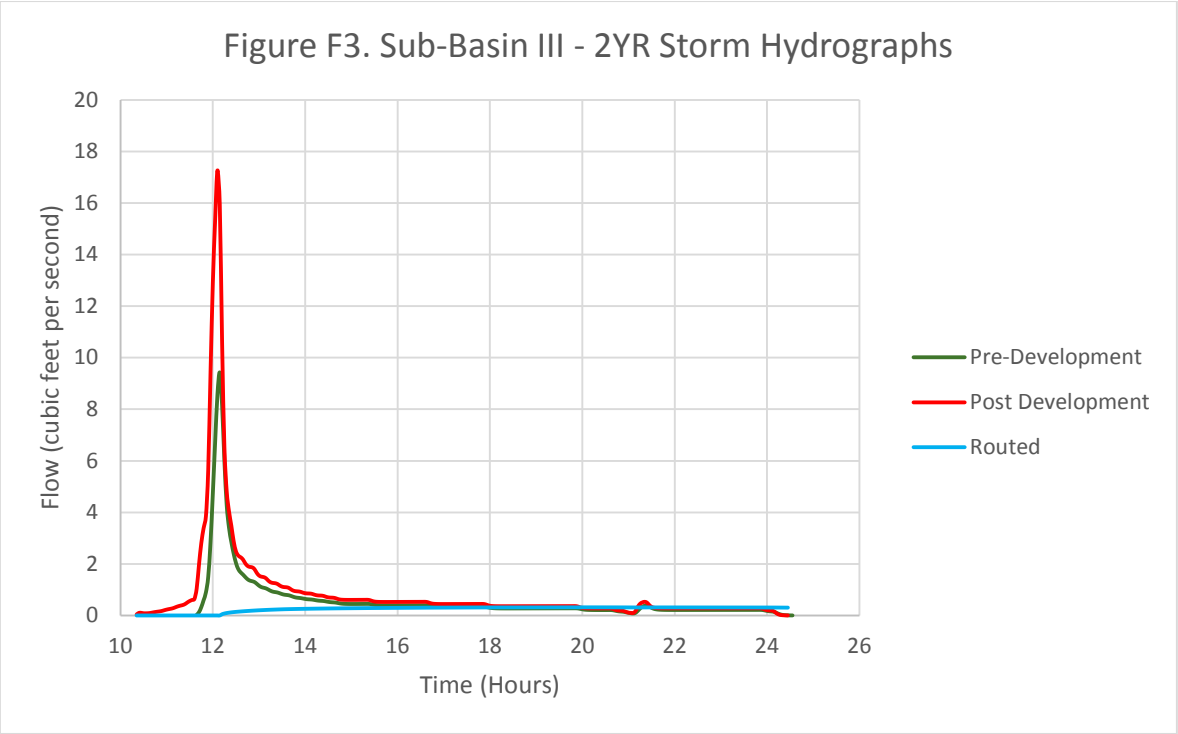

Table F3. Sub-Basin III 2YR Storm Results		
Description	Quantity	Units
Existing Peak Flow Rate	9.43	cfs
Developed Peak Flow Rate	17.27	cfs
Routed Peak Flow Rate	0.32	cfs
Max Pond Water Elevation	784.74	ft-msl
Existing Volumetric Runoff	0.58	ac-ft
Routed Volumetric Runoff	0.19	ac-ft
Critical Time Duration	9.5	hrs

175 RAY AVE NE
NEW PHILADELPHIA, OH 44663

Diversified Engineering Inc.
CONSULTING ENGINEERS & SURVEYORS

PHONE: 330-364-1631
FAX: 330-364-4031
EMAIL: div@div-eng.com

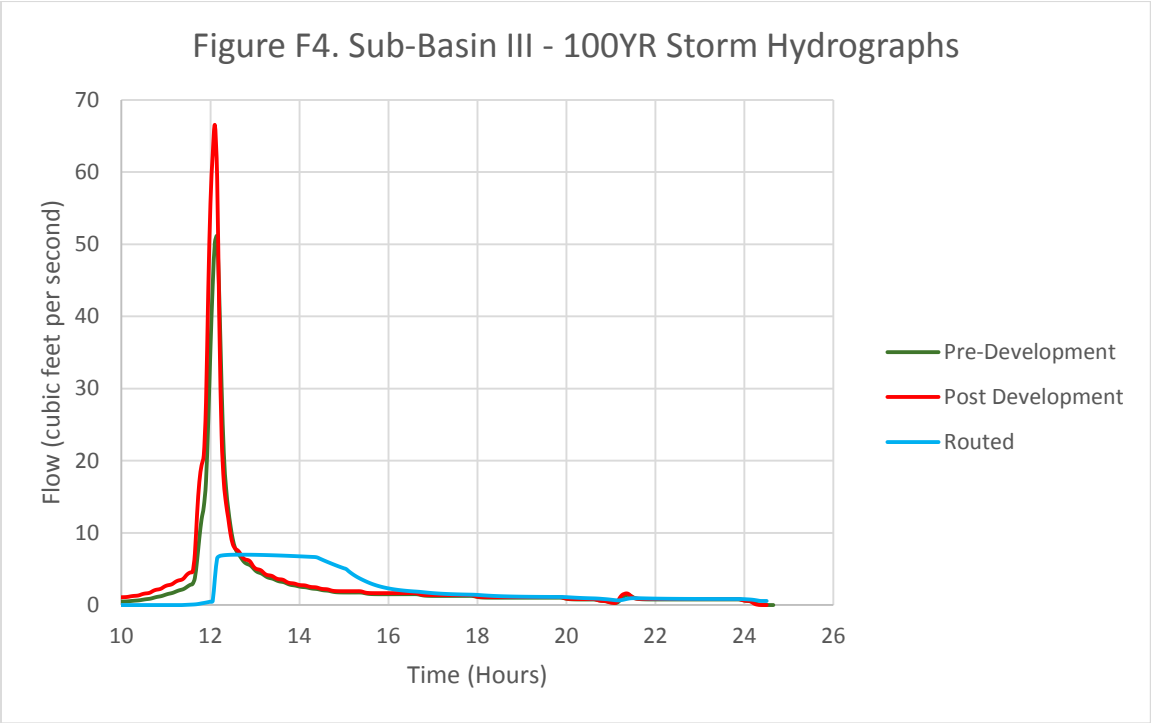

Table F4. Sub-Basin III 100YR Storm Results		
Description	Quantity	Units
Existing Peak Flow Rate	51.05	cfs
Developed Peak Flow Rate	66.49	cfs
Routed Peak Flow Rate	6.98	cfs
Max Pond Water Elevation	787.19	ft-msl
Existing Volumetric Runoff	3.08	ac-ft
Routed Volumetric Runoff	2.41	ac-ft
Critical Time Duration	9.5	hrs

Appendix A. Existing Site Conditions

EXISTING CONDITIONS PLAN

Scale: 1" = 100'

NORTH

Scale: 1 in. = 100 ft.

0' 100' 200' 300'

Graphic Scale

Coordinate System: State Plane NAD83 Wisconsin South

GENERAL NOTES:

A. *All existing utilities are shown herein as reference only and are based on record of the various utility companies and a field survey. Contractor is responsible for determining the exact locations of all utilities prior to any construction activities.*

B. *All existing conditions, topography, utilities, and property information are taken from a survey of land situated in the City of Sterling, county of Loudoun, State of Virginia, by surveyors: Construction Quality Management, Inc., 2679 Continental Drive, Green Bay, WI. 54311, ph: (920) 465-3911, fx: (920) 465-3913 and Diversified Engineering, Inc., 175 Ray Avenue, NE, New Philadelphia, OH. 44663. ph: (330) 364-1631, fx: (330) 364-4031.*

ISSUE DATE	01/04/2018	SCALE	1" = 100'	CTR INT.	2'
SURVEYED BY		CHECKED BY		KJB	
DRAWN BY	COM	APPROVED BY		MJB	
	EDW				

REV	DATE	DESCRIPTION	DWN BY	DES BY	CHK BY	APP BY

Diversified Engineering Inc.
CONSULTING ENGINEERS & SURVEYORS
175 RAY AVENUE, N.E.
NEW PHILADELPHIA, OH 44663
Phone: (330) 364-1631
Fax: (330) 364-4031
e-mail: diei@diei-eng.com
Web: www.diei-eng.com

WASTE MANAGEMENT

PROJECT: *TRUCK MAINTENANCE FACILITY GERMANTOWN, WI*

SHEET TITLE: *EXISTING CONDITIONS PLAN*

SHEET NO: **1/1**

JOB NO: ENG-1465

Appendix A. SWMP Site Plan

NORTH
Scale: 1 in. = 50 ft.
0' 50' 100' 150'
Graphic Scale
Coordinate System:
State Plane NAD83 Wisconsin South

LEGEND:

- Silt Fence
- Inlet Protection
- Construction Entrance
- Staging / Stockpile Area
- Material Stockpile
- Riprap Outlet Protection
- Concrete Wash-out Area
- Concrete Wash-out Area

DRAINAGE AREA SUB-BASIN II ~ 3.82 ACRES

DRAINAGE AREA SUB-BASIN III ~ 11.83 ACRES

DRAINAGE AREA SUB-BASIN I ~ 5.78 ACRES

L.F.P. SUB-BASIN I

L.F.P. SUB-BASIN III

COUNTY LINE ROAD, C.T.H. Q

RETENTION POND

RETENTION POND FOREBAY

OFFICE 75' x 130'

TRUCK MAINTENANCE 250' x 100'

TRUCK INSPECTION CANOPY 120' x 30'

CNG COMPOUND 40' x 70'

Proposed Perimeter Silt Fence

Maintain Existing Entrance for Construction Entrance

Construction Staging / Material Stockpile Area

Outlet Protection: Minimum 20 LF along ditch Extend sides to top of ditch or 12" above outlet elevation

110 LF @ 2.4% - 18" SDR-35 CULVERT

FL ELEV. @ OUTLET 774.50

Concrete Emergency Spill-way Elev. 776.00

Rip Rap Line Emergency Spill-way Channel Outlet

Detention Pond Outlet Structure To Daylight Into Proposed Spillway Ditch ~ Elev. 772.00

±40 LF - 12" SDR-35 Storm

Prop. 2x2 Outlet Structure (OS-01) Top Grate = 775.00 Inv. In = 773.00 (4" Orifice - E) Inv. Out = 772.30 (12" - S) Bottom of Sump = 771.00

High-Performance Turf Reinforcement Mat (HPTRM)

Stormwater Retention Pond Top Berm Elev: 777.00 Top Water Elev: 774.00 Bottom Elev: 769.00 Storage Capacity: 0.87 Ac-Ft

FL ELEV. @ OUTLET 780.00

±50 LF - 12" SDR-35 Storm

Prop. 4' Ø Manhole (MH-01) Top Grate = 790.70 Inv. In = 785.00 (12" - S) Inv. In = 781.50 (12" - N) Inv. Out = 780.75 (12" - W) Bottom of Sump = 780.70

Prop. 2x2 Catch Basin (CB-06) Top Grate = 791.00 Inv. In = 786.00 (12" - S) Inv. Out = 786.00 (12" - N) Bottom of Sump = 785.00

±185 LF - 12" SDR-35 Storm

±25 LF - 12" SDR-35 Storm

Prop. 2x2 Catch Basin (CB-07) Top Grate = 785.75 Inv. Out = 782.00 (12" - S) Bottom of Sump = 781.75

Prop. 2x2 Catch Basin (CB-04) Top Grate = 778.65 Inv. In = 775.25 (12" - E) Inv. In = 775.25 (12" - N) Inv. Out = 775.15 (12" - W) Bottom of Sump = 774.65

Prop. 2x2 Catch Basin (CB-03) Top Grate = 781.77 Inv. In = 777.00 (12" - E) Inv. Out = 776.25 (12" - S) Bottom of Sump = 775.77

Prop. 2x2 Catch Basin (CB-02) Top Grate = 782.80 Inv. Out = 779.80 (12" - W) Bottom of Sump = 778.80

±160 LF - 12" SDR-35 Storm

±110 LF - 12" SDR-35 Storm

±150 LF - 12" SDR-35 Storm

Prop. 2x2 Catch Basin (CB-05) Top Grate = 790.00 Inv. Out = 787.00 (12" - W) Bottom of Sump = 786.00

Prop. 2x2 Catch Basin (CB-01) Top Grate = 779.25 Inv. Out = 776.25 (12" - W) Bottom of Sump = 776.00

Ex. Sanitary Manhole Top Rim = 779.85 Inv. Out = 753.56 (48" - E) Inv. In = 753.58 (48" - W)

Ex. Sanitary Manhole Top Rim = 793.99 Inv. Out = 752.90 (48" - E) Inv. In = 784.06 (8" - NE) Inv. In = 752.92 (48" - W)

Silt Fence

Ex. 3/4" Gas Service

Ex. Lawn

Ex. Flare

Ex. Shed

Ex. Wooded Area

Approx. Ex. Wetland Area Boundary Per Wisconsin Wetland Inventory

Approx. Ex. Wetland Area Boundary 25' Offset

Prop. 2x2 Catch Basin (CB-09) Top Grate = 793.50 Inv. In = 789.75 (12" - S) Inv. In = 789.75 (12" - E) Inv. Out = 789.75 (12" - S) Bottom of Sump = 789.50

Prop. 2x2 Catch Basin (CB-08) Top Grate = 794.00 Inv. Out = 791.00 (12" - N) Bottom of Sump = 790.00

Prop. 2x2 Catch Basin (CB-10) Top Grate = 794.70 Inv. In = 788.75 (12" - E) Inv. Out = 788.75 (12" - S) Bottom of Sump = 788.70

±195 LF - 12" SDR-35 Storm

±200 LF - 12" SDR-35 Storm

±250 LF - 12" SDR-35 Storm

±7 LF - 12" SDR-35 Storm

Prop. 4' Ø Manhole (MH-02) Top Grate = 801.10 Inv. Out = 789.85 (12" - W) Bottom of Sump = 789.10

Ex. Asphalt

Ex. Building

Ex. Structures

Ex. Conc.

Ex. Gravel

EXISTING SURFACE WATER FLOW LINES (OFF-SITE)

Rip Rap Line Emergency Spill-way Channel Outlet

Detention Pond Outlet Structure To Daylight Into Proposed Spillway Ditch ~ Elev. 782.00

±75 LF - 12" SDR-35 Storm

Prop. 2x2 Outlet Structure (OS-02) Top Grate = 785.00 Inv. In = 784.00 (4" Orifice - E) Inv. Out = 783.50 (12" - S) Bottom of Sump = 782.00

Concrete Emergency Spill-way Elev. 787.00

Proposed Retention Pond to be used as temporary sediment basin during construction. Sediment build-up to be removed and slopes re-seeded.

Construction Staging / Material Stockpile Area

Proposed Concrete Wash-out Area

FL ELEV. @ OUTLET 787.00

Outlet Protection: Minimum 20 LF along ditch Extend sides to top of ditch or 12" above outlet elevation

58 LF @ 2.6% - 18" SDR-35 CULVERT W/ HDPE FLARED ENDS

Stormwater Retention Pond Top Berm Elev: 791.00 Top Water Elev: 786.00 Bottom Elev: 779.00 Storage Capacity: 1.54 Ac-Ft

REV	DATE	DESCRIPTION	DWN BY	DES BY	CHK BY	APP BY

ISSUE DATE 01/04/2016 SCALE 1" = 50' CTR INT. 2'
SURVEYED BY COM CHECKED BY KJB
DRAWN BY ATC APPROVED BY MJB

Diversified Engineering Inc.
CONSULTING ENGINEERS & SURVEYORS
175 RAY AVENUE, N.E.
NEW PHILADELPHIA, OH 44663
Phone: (330) 364-5531
Fax: (330) 364-5532
e-mail: diei@diei-eng.com
Web: www.diei-eng.com

WASTE MANAGEMENT

PROJECT: TRUCK MAINTENANCE FACILITY GERMANTOWN, WI

SHEET TITLE: STORM WATER MANAGEMENT PLAN

SHEET NO: 1/1

JOB NO: ENG-1465

D-Series Size 1

LED Area Luminaire

Catalog Number

Notes

Type

Hit the Tab key or mouse over the page to see all interactive elements.

Specifications

EPA:	1.01 ft² (0.09 m²)
Length:	33″ (83.8 cm)
Width:	13″ (33.0 cm)
Height:	7-1/2″ (19.0 cm)
Weight (max):	27 lbs (12.2 kg)

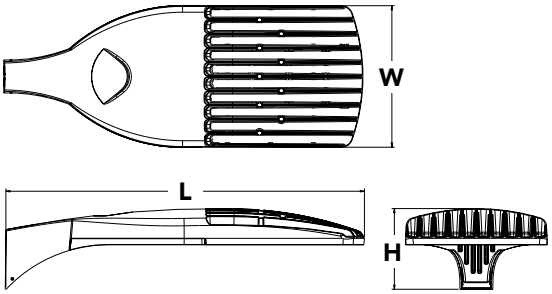

A+ Capable Luminaire

This item is an A+ capable luminaire, which has been designed and tested to provide consistent color appearance and system-level interoperability.

- All configurations of this luminaire meet the Acuity Brands' specification for chromatic consistency
- This luminaire is A+ Certified when ordered with DTL® controls marked by a shaded background. DTL DLL equipped luminaires meet the A+ specification for luminaire to photocontrol interoperability1
- This luminaire is part of an A+ Certified solution for ROAM® or XPoint™ Wireless control networks, providing out-of-the-box control compatibility with simple commissioning, when ordered with drivers and control options marked by a shaded background[1]

To learn more about A+, visit www.acuitybrands.com/aplus.

1. See ordering tree for details.
2. A+ Certified Solutions for ROAM require the order of one ROAM node per luminaire. Sold Separately: Link to Roam; Link to DTL DLL

A+ Capable options indicated by this color background.

Ordering Information

EXAMPLE: DSX1 LED P7 40K T3M MVOLT SPA DDBXD

DSX1LED

Series

DSX1 LED

LEDs

Forward optics

P1	P4	P7
P2	P5	P8
P3	P6	P9

Rotated optics

P10[1]	P12[1]
P11[1]	P13[1]

Color temperature

30K	3000 K
40K	4000 K
50K	5000 K
AMBPC	Amber phosphor converted[2]

Distribution

T1S	Type I short	T5S	Type V short
T2S	Type II short	T5M	Type V medium
T2M	Type II medium	T5W	Type V wide
T3S	Type III short	BLC	Backlight control[2,3]
T3M	Type III medium	LCCO	Left corner cutoff[2,3]
T4M	Type IV medium	RCCO	Right corner cutoff[2,3]
TFTM	Forward throw medium		
T5VS	Type V very short		

Voltage

MVOLT[4,5]	
120[6]	
208[5,6]	
240[5,6]	
277[6]	
347[5,6,7]	
480[5,6,7]	

Mounting

Shipped included

SPA	Square pole mounting
RPA	Round pole mounting
WBA	Wall bracket
SPUMBA	Square pole universal mounting adaptor[8]
RPUMBA	Round pole universal mounting adaptor[8]

Shipped separately

KMA8 DDBXD U	Mast arm mounting bracket adaptor (specify finish)[9]

Control options

Shipped installed

NLTAIR2	nLight AIR generation 2 enabled[10]
PER	NEMA twist-lock receptacle only (controls ordered separate)[11]
PER5	Five-wire receptacle only (controls ordered separate)[11,12]
PER7	Seven-wire receptacle only (controls ordered separate)[11,12]
DMG	0-10V dimming extend out back of honsing for external control (leads exit fixture)
DS	Dual switching[13,14]
PIR	Bi-level, motion/ambient sensor, 8-15' mounting height, ambient sensor enabled at 5fc[5,15,16]
PIRH	Bi-level, motion/ambient sensor, 15-30' mounting height, ambient sensor enabled at 5fc[5,15,16]
PIRHN	Network, Bi-Level motion/ambient sensor[17]
PIR1FC3V	Bi-level, motion/ambient sensor, 8-15' mounting height, ambient sensor enabled at 1fc[5,15,16]
PIRH1FC3V	Bi-level, motion/ambient sensor, 15-30' mounting height, ambient sensor enabled at 1fc[5,15,16]
BL30	Bi-level switched dimming, 30%[5,14,18]
BL50	Bi-level switched dimming, 50%[5,14,18]
PNMTDD3	Part night, dim till dawn[5,19]
PNMT5D3	Part night, dim 5 hrs[5,19]
PNMT6D3	Part night, dim 6 hrs[5,19]
PNMT7D3	Part night, dim 7 hrs[5,19]
FAO	Field adjustable output[20]

Other options

Shipped installed

HS	House-side shield[21]
SF	Single fuse (120, 277, 347V)[6]
DF	Double fuse (208, 240, 480V)[6]
L90	Left rotated optics[1]
R90	Right rotated optics[1]

Shipped separately

BS	Bird spikes[22]
EGS	External glare shield[22]

Finish *(required)*

DDBXD	Dark bronze
DBLXD	Black
DNAXD	Natural aluminum
DWHXD	White
DDBTXD	Textured dark bronze
DBLBXD	Textured black
DNATXD	Textured natural aluminum
DWHGXD	Textured white

© 2011-2018 Acuity Brands Lighting, Inc. All rights reserved.

Ordering Information

Accessories

Ordered and shipped separately.

DLL127F 1.5 JU	Photocell - SSL twist-lock (120-277V) [23]
DLL347F 1.5 CUL JU	Photocell - SSL twist-lock (347V) [23]
DLL480F 1.5 CUL JU	Photocell - SSL twist-lock (480V) [23]
DSHORT SBK U	Shorting cap [23]
DSX1HS 30C U	House-side shield for 30 LED unit[21]
DSX1HS 40C U	House-side shield for 40 LED unit[21]
DSX1HS 60C U	House-side shield for 60 LED unit[21]
PUMBA DDBXD U*	Square and round pole universal mounting bracket (specify finish)[24]
KMA8 DDBXD U	Mast arm mounting bracket adaptor (specify finish) [8]

For more control options, visit DTL and ROAM online.

NOTES
1 P10, P11, P12 or P13 and rotated optics (L90, R90) only available together.
2 AMBPC is not available with BLC, LCCO, RCCO or P4, P7, P8, P9 or P13.
3 Not available with HS.
4 MVOLT driver operates on any line voltage from 120-277V (50/60 Hz).
5 Any PIRx with BL30, BL50 or PNMT, is not available with 208V, 240V, 347V, 480V or MVOLT. It is only available in 120V or 277V specified.
6 Single fuse (SF) requires 120V, 277V or 347V. Double fuse (DF) requires 208V, 240V or 480V.
7 Not available in P1 or P10. Not available with BL30, BL50 or PNMT options.
8 Existing drilled pole only. Available as a separate combination accessory; for retrofit use only: PUMBA (finish) U; 1.5 G vibration load rating per ANCI C136.31.
9 Must order fixture with SPA option. Must be ordered as a separate accessory; see Accessories information. For use with 2-3/8" mast arm (not included).
10 Must be ordered with PIRHN.
11 Photocell ordered and shipped as a separate line item from Acuity Brands Controls. See accessories. Not available with DS option. Shorting cap included.
12 If ROAM® node required, it must be ordered and shipped as a separate line item from Acuity Brands Controls. Not available with DCR. Node with integral dimming. Shorting cap included.
13 Provides 50/50fixture operation via (2) independent drivers. Not available with PER, PER5, PER7, PIR or PIRH. Not available P1, P2, P3, P4 or P5.
14 Requires (2) separately switched circuits.
15 Reference Motion Sensor table on page 3.
16 Reference PER table on page 3 to see functionality.
17 Must be ordered with NLTAIR2. For more information on nLight Air 2 visit this link.
18 Not available with 347V, 480V, PNMT, DS. For PER5 or PER7, see PER Table on page 3. Requires isolated neutral.
19 Not available with 347V, 480V, DS, BL30, BL50. For PER5 or PER7, see PER Table on page 3. Separate Dusk to Dawn required.
20 Not available with other dimming controls options
21 Not available with BLC, LCCO and RCCO distribution. Also available as a separate accessory; see Accessories information.
22 Must be ordered with fixture for factory pre-drilling.
23 Requires luminaire to be specified with PER, PER5 or PER7 option. See PER Table on page 3.
24 For retrofit use only.

External Glare Shield

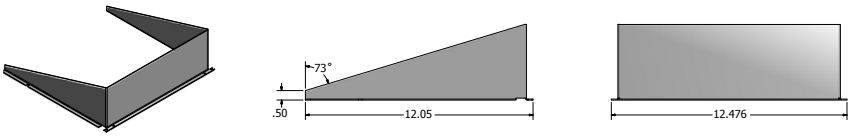

Drilling

HANDHOLE ORIENTATION

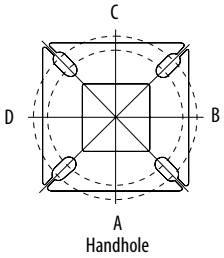

Template #8

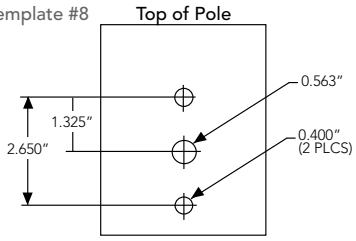

Tenon Mounting Slipfitter **

Tenon O.D.	Single Unit	2 at 180°	2 at 90°	3 at 120°	3 at 90°	4 at 90°
2-3/8"	AST20-190	AST20-280	AST20-290	AST20-320	AST20-390	AST20-490
2-7/8"	AST25-190	AST25-280	AST25-290	AST25-320	AST25-390	AST25-490
4"	AST35-190	AST35-280	AST35-290	AST35-320	AST35-390	AST35-490

Pole drilling nomenclature: # of heads at degree from handhole (default side A)					
DM19AS	DM28AS	DM29AS	DM32AS	DM39AS	DM49AS
1 @ 90°	2 @ 280°	2 @ 90°	3 @ 120°	3 @ 90°	4 @ 90°
Side B	Side B & D	Side B & C	Round pole only	Side B, C, & D	Sides A, B, C, D
Note: Review luminaire spec sheet for specific nomenclature					

Pole top or tenon O.D.	4.5" @ 90°	4" @ 90°	3.5" @ 90°	3" @ 90°	4.5" @ 120°	4" @ 120°	3.5" @ 120°	3" @ 120°
DSX SPA	Y	Y	Y	N	-	-	-	-
DSX RPA	Y	Y	N	N	Y	Y	Y	Y
DSX SPUMBA	Y	N	N	N	-	-	-	-
DSX RPUMBA	N	N	N	N	Y	Y	Y	N
					*3 fixtures @120 require round pole top/tenon.			

Photometric Diagrams

To see complete photometric reports or download .ies files for this product, visit Lithonia Lighting's D-Series Area Size 1 homepage.

Isofootcandle plots for the DSX1 LED 60C 1000 40K. Distances are in units of mounting height (25').

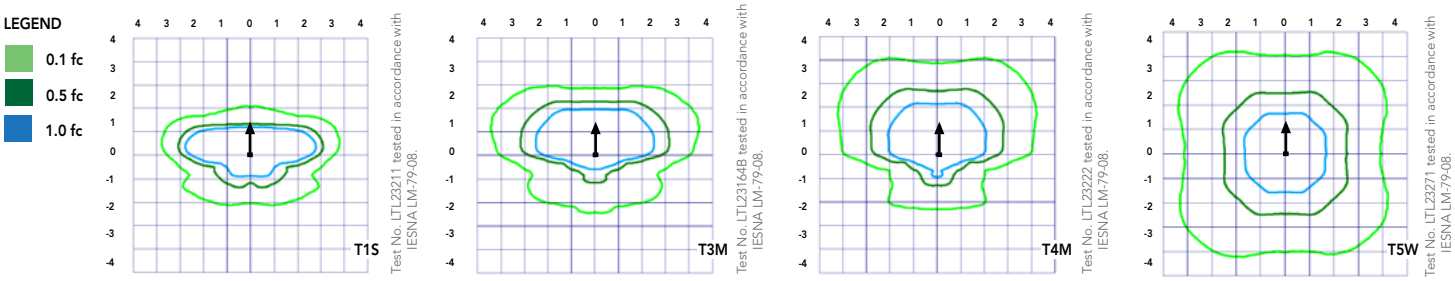

© 2011-2018 Acuity Brands Lighting, Inc. All rights reserved.

Performance Data

Lumen Ambient Temperature (LAT) Multipliers

Use these factors to determine relative lumen output for average ambient temperatures from 0-40°C (32-104°F).

Ambient		Lumen Multiplier
0°C	32°F	1.04
5°C	41°F	1.04
10°C	50°F	1.03
15°C	50°F	1.02
20°C	68°F	1.01
25°C	**77°F**	**1.00**
30°C	86°F	0.99
35°C	95°F	0.98
40°C	104°F	0.97

Projected LED Lumen Maintenance

Data references the extrapolated performance projections for the platforms noted in a **25°C ambient**, based on 10,000 hours of LED testing (tested per IESNA LM-80-08 and projected per IESNA TM-21-11).

To calculate LLF, use the lumen maintenance factor that corresponds to the desired number of operating hours below. For other lumen maintenance values, contact factory.

Operating Hours	0	25000	50000	100000
Lumen Maintenance Factor	1.00	0.96	0.92	0.85

Electrical Load

					Current (A)					
	Performance Package	LED Count	Drive Current	Wattage	120	208	240	277	347	480
Forward Optics (Non-Rotated)	P1	30	530	54	0.45	0.26	0.23	0.19	0.10	0.12
	P2	30	700	70	0.59	0.34	0.30	0.25	0.20	0.16
	P3	30	1050	102	0.86	0.50	0.44	0.38	0.30	0.22
	P4	30	1250	125	1.06	0.60	0.52	0.46	0.37	0.27
	P5	30	1400	138	1.16	0.67	0.58	0.51	0.40	0.29
	P6	40	1250	163	1.36	0.78	0.68	0.59	0.47	0.34
	P7	40	1400	183	1.53	0.88	0.76	0.66	0.53	0.38
	P8	60	1050	207	1.74	0.98	0.87	0.76	0.64	0.49
	P9	60	1250	241	2.01	1.16	1.01	0.89	0.70	0.51
Rotated Optics (Requires L90 or R90)	P10	60	530	106	0.90	0.52	0.47	0.43	0.33	0.27
	P11	60	700	137	1.15	0.67	0.60	0.53	0.42	0.32
	P12	60	1050	207	1.74	0.99	0.87	0.76	0.60	0.46
	P13	60	1250	231	1.93	1.12	0.97	0.86	0.67	0.49

Motion Sensor Default Settings						
Option	Dimmed State	High Level (when triggered)	Phototcell Operation	Dwell Time	Ramp-up Time	Ramp-down Time
PIR or PIRH	3V (37%) Output	10V (100%) Output	Enabled @ 5FC	5 min	3 sec	5 min
*PIR1FC3V or PIRH1FC3V	3V (37%) Output	10V (100%) Output	Enabled @ 1FC	5 min	3 sec	5 min
*for use with Inline Dusk to Dawn or timer.						

PER Table						
Control	PER (3 wire)	PER5 (5 wire)		PER7 (7 wire)		
			Wire 4/Wire5		Wire 4/Wire5	Wire 6/Wire7
Photocontrol Only (On/Off)	✔	⚠	Wired to dimming leads on driver	⚠	Wired to dimming leads on driver	Wires Capped inside fixture
ROAM	⊘	✔	Wired to dimming leads on driver	⚠	Wired to dimming leads on driver	Wires Capped inside fixture
ROAM with Motion (ROAM on/off only)	⊘	⚠	Wires Capped inside fixture	⚠	Wires Capped inside fixture	Wires Capped inside fixture
Future-proof*	⊘	⚠	Wired to dimming leads on driver	✔	Wired to dimming leads on driver	Wires Capped inside fixture
Future-proof* with Motion	⊘	⚠	Wires Capped inside fixture	✔	Wires Capped inside fixture	Wires Capped inside fixture

✔ Recommended
⊘ Will not work
⚠ Alternate

*Future-proof means: Ability to change controls in the future.

© 2011-2018 Acuity Brands Lighting, Inc. All rights reserved.

Performance Data

Lumen Output

Lumen values are from photometric tests performed in accordance with IESNA LM-79-08. Data is considered to be representative of the configurations shown, within the tolerances allowed by Lighting Facts. Contact factory for performance data on any configurations not shown here.

Forward Optics

LED Count	Drive Current	Power Package	System Watts	Dist. Type	30K (3000 K, 70 CRI)					40K (4000 K, 70 CRI)					50K (5000 K, 70 CRI)					AMBPC (Amber Phosphor Converted)				
					Lumens	B	U	G	LPW	Lumens	B	U	G	LPW	Lumens	B	U	G	LPW	Lumens	B	U	G	LPW
30	530	P1	54W	T1S	6,457	2	0	2	120	6,956	2	0	2	129	7,044	2	0	2	130	3,640	1	0	1	70
				T2S	6,450	2	0	2	119	6,949	2	0	2	129	7,037	2	0	2	130	3,813	1	0	1	73
				T2M	6,483	1	0	1	120	6,984	2	0	2	129	7,073	2	0	2	131	3,689	1	0	1	71
				T3S	6,279	2	0	2	116	6,764	2	0	2	125	6,850	2	0	2	127	3,770	1	0	1	73
				T3M	6,468	1	0	2	120	6,967	1	0	2	129	7,056	1	0	2	131	3,752	1	0	1	72
				T4M	6,327	1	0	2	117	6,816	1	0	2	126	6,902	1	0	2	128	3,758	1	0	1	72
				TFTM	6,464	1	0	2	120	6,963	1	0	2	129	7,051	1	0	2	131	3,701	1	0	1	71
				T5VS	6,722	2	0	0	124	7,242	3	0	0	134	7,334	3	0	0	136	3,928	2	0	0	76
				T5S	6,728	2	0	1	125	7,248	2	0	1	134	7,340	2	0	1	136	3,881	2	0	0	75
				T5M	6,711	3	0	1	124	7,229	3	0	1	134	7,321	3	0	2	136	3,930	2	0	1	76
				T5W	6,667	3	0	2	123	7,182	3	0	2	133	7,273	3	0	2	135	3,820	3	0	1	73
				BLC	5,299	1	0	1	98	5,709	1	0	2	106	5,781	1	0	2	107					
				LCCO	3,943	1	0	2	73	4,248	1	0	2	79	4,302	1	0	2	80					
				RCCO	3,943	1	0	2	73	4,248	1	0	2	79	4,302	1	0	2	80					
30	700	P2	70W	T1S	8,249	2	0	2	118	8,886	2	0	2	127	8,999	2	0	2	129	4,561	1	0	1	67
				T2S	8,240	2	0	2	118	8,877	2	0	2	127	8,989	2	0	2	128	4,777	1	0	1	70
				T2M	8,283	2	0	2	118	8,923	2	0	2	127	9,036	2	0	2	129	4,622	1	0	2	68
				T3S	8,021	2	0	2	115	8,641	2	0	2	123	8,751	2	0	2	125	4,724	1	0	1	69
				T3M	8,263	2	0	2	118	8,901	2	0	2	127	9,014	2	0	2	129	4,701	1	0	2	69
				T4M	8,083	2	0	2	115	8,708	2	0	2	124	8,818	2	0	2	126	4,709	1	0	2	69
				TFTM	8,257	2	0	2	118	8,896	2	0	2	127	9,008	2	0	2	129	4,638	1	0	2	68
				T5VS	8,588	3	0	0	123	9,252	3	0	0	132	9,369	3	0	0	134	4,922	2	0	0	72
				T5S	8,595	3	0	1	123	9,259	3	0	1	132	9,376	3	0	1	134	4,863	2	0	0	72
				T5M	8,573	3	0	2	122	9,236	3	0	2	132	9,353	3	0	2	134	4,924	3	0	1	72
				T5W	8,517	3	0	2	122	9,175	4	0	2	131	9,291	4	0	2	133	4,787	3	0	1	70
				BLC	6,770	1	0	2	97	7,293	1	0	2	104	7,386	1	0	2	106					
				LCCO	5,038	1	0	2	72	5,427	1	0	2	78	5,496	1	0	2	79					
				RCCO	5,038	1	0	2	72	5,427	1	0	2	78	5,496	1	0	2	79					
30	1050	P3	102W	T1S	11,661	2	0	2	114	12,562	3	0	3	123	12,721	3	0	3	125					
				T2S	11,648	2	0	2	114	12,548	3	0	3	123	12,707	3	0	3	125					
				T2M	11,708	2	0	2	115	12,613	2	0	2	124	12,773	2	0	2	125					
				T3S	11,339	2	0	2	111	12,215	3	0	3	120	12,370	3	0	3	121					
				T3M	11,680	2	0	2	115	12,582	2	0	2	123	12,742	2	0	2	125					
				T4M	11,426	2	0	3	112	12,309	2	0	3	121	12,465	2	0	3	122					
				TFTM	11,673	2	0	2	114	12,575	2	0	3	123	12,734	2	0	3	125					
				T5VS	12,140	3	0	1	119	13,078	3	0	1	128	13,244	3	0	1	130					
				T5S	12,150	3	0	1	119	13,089	3	0	1	128	13,254	3	0	1	130					
				T5M	12,119	4	0	2	119	13,056	4	0	2	128	13,221	4	0	2	130					
				T5W	12,040	4	0	3	118	12,970	4	0	3	127	13,134	4	0	3	129					
				BLC	9,570	1	0	2	94	10,310	1	0	2	101	10,440	1	0	2	102					
				LCCO	7,121	1	0	3	70	7,671	1	0	3	75	7,768	1	0	3	76					
				RCCO	7,121	1	0	3	70	7,671	1	0	3	75	7,768	1	0	3	76					
30	1250	P4	125W	T1S	13,435	3	0	3	107	14,473	3	0	3	116	14,657	3	0	3	117					
				T2S	13,421	3	0	3	107	14,458	3	0	3	116	14,641	3	0	3	117					
				T2M	13,490	2	0	2	108	14,532	3	0	3	116	14,716	3	0	3	118					
				T3S	13,064	3	0	3	105	14,074	3	0	3	113	14,252	3	0	3	114					
				T3M	13,457	2	0	2	108	14,497	2	0	2	116	14,681	2	0	2	117					
				T4M	13,165	2	0	3	105	14,182	2	0	3	113	14,362	2	0	3	115					
				TFTM	13,449	2	0	3	108	14,488	2	0	3	116	14,672	2	0	3	117					
				T5VS	13,987	4	0	1	112	15,068	4	0	1	121	15,259	4	0	1	122					
				T5S	13,999	3	0	1	112	15,080	3	0	1	121	15,271	3	0	1	122					
				T5M	13,963	4	0	2	112	15,042	4	0	2	120	15,233	4	0	2	122					
				T5W	13,872	4	0	3	111	14,944	4	0	3	120	15,133	4	0	3	121					
				BLC	11,027	1	0	2	88	11,879	1	0	2	95	12,029	1	0	2	96					
				LCCO	8,205	1	0	3	66	8,839	1	0	3	71	8,951	1	0	3	72					
				RCCO	8,205	1	0	3	66	8,839	1	0	3	71	8,951	1	0	3	72					
30	1400	P5	138W	T1S	14,679	3	0	3	106	15,814	3	0	3	115	16,014	3	0	3	116					
				T2S	14,664	3	0	3	106	15,797	3	0	3	114	15,997	3	0	3	116					
				T2M	14,739	3	0	3	107	15,878	3	0	3	115	16,079	3	0	3	117					
				T3S	14,274	3	0	3	103	15,377	3	0	3	111	15,572	3	0	3	113					
				T3M	14,704	2	0	3	107	15,840	3	0	3	115	16,040	3	0	3	116					
				T4M	14,384	2	0	3	104	15,496	3	0	3	112	15,692	3	0	3	114					
				TFTM	14,695	2	0	3	106	15,830	3	0	3	115	16,030	3	0	3	116					
				T5VS	15,283	4	0	1	111	16,464	4	0	1	119	16,672	4	0	1	121					
				T5S	15,295	3	0	1	111	16,477	4	0	1	119	16,686	4	0	1	121					
				T5M	15,257	4	0	2	111	16,435	4	0	2	119	16,644	4	0	2	121					
				T5W	15,157	4	0	3	110	16,328	4	0	3	118	16,534	4	0	3	120					
				BLC	12,048	1	0	2	87	12,979	1	0	2	94	13,143	1	0	2	95					
				LCCO	8,965	1	0	3	65	9,657	1	0	3	70	9,780	1	0	3	71					
					8,965	1	0	3	65	9,657	1	0	3	70	9,780	1	0	3	71					

© 2011-2018 Acuity Brands Lighting, Inc. All rights reserved.

Performance Data

Lumen Output

Lumen values are from photometric tests performed in accordance with IESNA LM-79-08. Data is considered to be representative of the configurations shown, within the tolerances allowed by Lighting Facts. Contact factory for performance data on any configurations not shown here.

Forward Optics

LED Count	Drive Current	Power Package	System Watts	Dist. Type	30K (3000 K, 70 CRI)					40K (4000 K, 70 CRI)					50K (5000 K, 70 CRI)					AMBPC (Amber Phosphor Converted)				
					Lumens	B	U	G	LPW	Lumens	B	U	G	LPW	Lumens	B	U	G	LPW	Lu-mens	B	U	G	LPW
40	1250	**P6**	163W	T1S	17,654	3	0	3	108	19,018	3	0	3	117	19,259	3	0	3	118					
				T2S	17,635	3	0	3	108	18,998	3	0	3	117	19,238	3	0	3	118					
				T2M	17,726	3	0	3	109	19,096	3	0	3	117	19,337	3	0	3	119					
				T3S	17,167	3	0	3	105	18,493	3	0	3	113	18,727	3	0	3	115					
				T3M	17,683	3	0	3	108	19,049	3	0	3	117	19,290	3	0	3	118					
				T4M	17,299	3	0	3	106	18,635	3	0	4	114	18,871	3	0	4	116					
				TFTM	17,672	3	0	3	108	19,038	3	0	4	117	19,279	3	0	4	118					
				T5VS	18,379	4	0	1	113	19,800	4	0	1	121	20,050	4	0	1	123					
				T5S	18,394	4	0	2	113	19,816	4	0	2	122	20,066	4	0	2	123					
				T5M	18,348	4	0	2	113	19,766	4	0	2	121	20,016	4	0	2	123					
				T5W	18,228	5	0	3	112	19,636	5	0	3	120	19,885	5	0	3	122					
				BLC	14,489	2	0	2	89	15,609	2	0	3	96	15,806	2	0	3	97					
				LCCO	10,781	1	0	3	66	11,614	1	0	3	71	11,761	2	0	3	72					
				RCCO	10,781	1	0	3	66	11,614	1	0	3	71	11,761	2	0	3	72					
40	1400	**P7**	183W	T1S	19,227	3	0	3	105	20,712	3	0	3	113	20,975	3	0	3	115					
				T2S	19,206	3	0	3	105	20,690	3	0	3	113	20,952	3	0	3	114					
				T2M	19,305	3	0	3	105	20,797	3	0	3	114	21,060	3	0	3	115					
				T3S	18,696	3	0	3	102	20,141	3	0	3	110	20,396	3	0	4	111					
				T3M	19,258	3	0	3	105	20,746	3	0	3	113	21,009	3	0	3	115					
				T4M	18,840	3	0	4	103	20,296	3	0	4	111	20,553	3	0	4	112					
				TFTM	19,246	3	0	4	105	20,734	3	0	4	113	20,996	3	0	4	115					
				T5VS	20,017	4	0	1	109	21,564	4	0	1	118	21,837	4	0	1	119					
				T5S	20,033	4	0	2	109	21,581	4	0	2	118	21,854	4	0	2	119					
				T5M	19,983	4	0	2	109	21,527	5	0	3	118	21,799	5	0	3	119					
				T5W	19,852	5	0	3	108	21,386	5	0	3	117	21,656	5	0	3	118					
				BLC	15,780	2	0	3	86	16,999	2	0	3	93	17,214	2	0	3	94					
				LCCO	11,742	2	0	3	64	12,649	2	0	3	69	12,809	2	0	3	70					
				RCCO	11,742	2	0	3	64	12,649	2	0	3	69	12,809	2	0	3	70					
60	1050	**P8**	207W	T1S	22,490	3	0	3	109	24,228	3	0	3	117	24,535	3	0	3	119					
				T2S	22,466	3	0	4	109	24,202	3	0	4	117	24,509	3	0	4	118					
				T2M	22,582	3	0	3	109	24,327	3	0	3	118	24,635	3	0	3	119					
				T3S	21,870	3	0	4	106	23,560	3	0	4	114	23,858	3	0	4	115					
				T3M	22,527	3	0	4	109	24,268	3	0	4	117	24,575	3	0	4	119					
				T4M	22,038	3	0	4	106	23,741	3	0	4	115	24,041	3	0	4	116					
				TFTM	22,513	3	0	4	109	24,253	3	0	4	117	24,560	3	0	4	119					
				T5VS	23,415	5	0	1	113	25,224	5	0	1	122	25,543	5	0	1	123					
				T5S	23,434	4	0	2	113	25,244	4	0	2	122	25,564	4	0	2	123					
				T5M	23,374	5	0	3	113	25,181	5	0	3	122	25,499	5	0	3	123					
				T5W	23,221	5	0	4	112	25,016	5	0	4	121	25,332	5	0	4	122					
				BLC	18,458	2	0	3	89	19,885	2	0	3	96	20,136	2	0	3	97					
				LCCO	13,735	2	0	3	66	14,796	2	0	4	71	14,983	2	0	4	72					
				RCCO	13,735	2	0	3	66	14,796	2	0	4	71	14,983	2	0	4	72					
60	1250	**P9**	241W	T1S	25,575	3	0	3	106	27,551	3	0	3	114	27,900	3	0	3	116					
				T2S	25,548	3	0	4	106	27,522	3	0	4	114	27,871	3	0	4	116					
				T2M	25,680	3	0	3	107	27,664	3	0	3	115	28,014	3	0	3	116					
				T3S	24,870	3	0	4	103	26,791	3	0	4	111	27,130	3	0	4	113					
				T3M	25,617	3	0	4	106	27,597	3	0	4	115	27,946	3	0	4	116					
				T4M	25,061	3	0	4	104	26,997	3	0	4	112	27,339	3	0	4	113					
				TFTM	25,602	3	0	4	106	27,580	3	0	4	114	27,929	3	0	4	116					
				T5VS	26,626	5	0	1	110	28,684	5	0	1	119	29,047	5	0	1	121					
				T5S	26,648	4	0	2	111	28,707	5	0	2	119	29,070	5	0	2	121					
				T5M	26,581	5	0	3	110	28,635	5	0	3	119	28,997	5	0	3	120					
				T5W	26,406	5	0	4	110	28,447	5	0	4	118	28,807	5	0	4	120					
				BLC	20,990	2	0	3	87	22,612	2	0	3	94	22,898	2	0	3	95					
				LCCO	15,619	2	0	4	65	16,825	2	0	4	70	17,038	2	0	4	71					
					15,619	2	0	4	65	16,825	2	0	4	70	17,038	2	0	4	71					

© 2011-2018 Acuity Brands Lighting, Inc. All rights reserved.

Lumen Output

Lumen values are from photometric tests performed in accordance with IESNA LM-79-08. Data is considered to be representative of the configurations shown, within the tolerances allowed by Lighting Facts. Contact factory for performance data on any configurations not shown here.

Rotated Optics

LED Count	Drive Current	Power Package	System Watts	Dist. Type	30K (3000 K, 70 CRI)					40K (4000 K, 70 CRI)					50K (5000 K, 70 CRI)					AMBPC (Amber Phosphor Converted)				
					Lumens	B	U	G	LPW	Lumens	B	U	G	LPW	Lumens	B	U	G	LPW	Lumens	B	U	G	LPW
60	530	**P10**	106W	T1S	13,042	3	0	3	123	14,050	3	0	3	133	14,228	3	0	3	134	7,167	2	0	2	72
				T2S	12,967	4	0	4	122	13,969	4	0	4	132	14,146	4	0	4	133	7,507	2	0	2	76
				T2M	13,201	3	0	3	125	14,221	3	0	3	134	14,401	3	0	3	136	7,263	2	0	2	73
				T3S	12,766	4	0	4	120	13,752	4	0	4	130	13,926	4	0	4	131	7,424	2	0	2	75
				T3M	13,193	4	0	4	124	14,213	4	0	4	134	14,393	4	0	4	136	7,387	2	0	2	75
				T4M	12,944	4	0	4	122	13,945	4	0	4	132	14,121	4	0	4	133	7,400	2	0	2	75
				TFTM	13,279	4	0	4	125	14,305	4	0	4	135	14,486	4	0	4	137	7,288	1	0	2	74
				T5VS	13,372	3	0	1	126	14,405	4	0	1	136	14,588	4	0	1	138	7,734	3	0	1	78
				T5S	13,260	3	0	1	125	14,284	3	0	1	135	14,465	3	0	1	136	7,641	3	0	0	77
				T5M	13,256	4	0	2	125	14,281	4	0	2	135	14,462	4	0	2	136	7,737	3	0	2	78
				T5W	13,137	4	0	3	124	14,153	4	0	3	134	14,332	4	0	3	135	7,522	3	0	2	76
				BLC	10,906	3	0	3	103	11,749	3	0	3	111	11,898	3	0	3	112					
				LCCO	7,789	1	0	3	73	8,391	1	0	3	79	8,497	1	0	3	80					
				RCCO	7,779	4	0	4	73	8,380	4	0	4	79	8,486	4	0	4	80					
60	700	**P11**	137W	T1S	16,556	3	0	3	121	17,835	3	0	3	130	18,061	4	0	4	132	8,952	2	0	2	68
				T2S	16,461	4	0	4	120	17,733	4	0	4	129	17,957	4	0	4	131	9,377	2	0	2	72
				T2M	16,758	4	0	4	122	18,053	4	0	4	132	18,281	4	0	4	133	9,072	2	0	2	69
				T3S	16,205	4	0	4	118	17,457	4	0	4	127	17,678	4	0	4	129	9,273	2	0	2	71
				T3M	16,748	4	0	4	122	18,042	4	0	4	132	18,271	4	0	4	133	9,227	2	0	2	70
				T4M	16,432	4	0	4	120	17,702	4	0	4	129	17,926	4	0	4	131	9,243	2	0	2	71
				TFTM	16,857	4	0	4	123	18,159	4	0	4	133	18,389	4	0	4	134	9,103	2	0	2	69
				T5VS	16,975	4	0	1	124	18,287	4	0	1	133	18,518	4	0	1	135	9,661	3	0	1	74
				T5S	16,832	4	0	1	123	18,133	4	0	2	132	18,362	4	0	2	134	9,544	3	0	1	73
				T5M	16,828	4	0	2	123	18,128	4	0	2	132	18,358	4	0	2	134	9,665	3	0	2	74
				T5W	16,677	4	0	3	122	17,966	5	0	3	131	18,193	5	0	3	133	9,395	4	0	2	72
				BLC	13,845	3	0	3	101	14,915	3	0	3	109	15,103	3	0	3	110					
				LCCO	9,888	1	0	3	72	10,652	2	0	3	78	10,787	2	0	3	79					
				RCCO	9,875	4	0	4	72	10,638	4	0	4	78	10,773	4	0	4	79					
60	1050	**P12**	207W	T1S	22,996	4	0	4	111	24,773	4	0	4	120	25,087	4	0	4	121					
				T2S	22,864	4	0	4	110	24,631	5	0	5	119	24,943	5	0	5	120					
				T2M	23,277	4	0	4	112	25,075	4	0	4	121	25,393	4	0	4	123					
				T3S	22,509	4	0	4	109	24,248	5	0	5	117	24,555	5	0	5	119					
				T3M	23,263	4	0	4	112	25,061	4	0	4	121	25,378	4	0	4	123					
				T4M	22,824	5	0	5	110	24,588	5	0	5	119	24,899	5	0	5	120					
				TFTM	23,414	5	0	5	113	25,223	5	0	5	122	25,543	5	0	5	123					
				T5VS	23,579	5	0	1	114	25,401	5	0	1	123	25,722	5	0	1	124					
				T5S	23,380	4	0	2	113	25,187	4	0	2	122	25,506	4	0	2	123					
				T5M	23,374	5	0	3	113	25,181	5	0	3	122	25,499	5	0	3	123					
				T5W	23,165	5	0	4	112	24,955	5	0	4	121	25,271	5	0	4	122					
				BLC	19,231	4	0	4	93	20,717	4	0	4	100	20,979	4	0	4	101					
				LCCO	13,734	2	0	3	66	14,796	2	0	4	71	14,983	2	0	4	72					
				RCCO	13,716	4	0	4	66	14,776	4	0	4	71	14,963	4	0	4	72					
60	1250	**P13**	231W	T1S	25,400	4	0	4	110	27,363	4	0	4	118	27,709	4	0	4	120					
				T2S	25,254	5	0	5	109	27,205	5	0	5	118	27,550	5	0	5	119					
				T2M	25,710	4	0	4	111	27,696	4	0	4	120	28,047	4	0	4	121					
				T3S	24,862	5	0	5	108	26,783	5	0	5	116	27,122	5	0	5	117					
				T3M	25,695	5	0	5	111	27,680	5	0	5	120	28,031	5	0	5	121					
				T4M	25,210	5	0	5	109	27,158	5	0	5	118	27,502	5	0	5	119					
				TFTM	25,861	5	0	5	112	27,860	5	0	5	121	28,212	5	0	5	122					
				T5VS	26,043	5	0	1	113	28,056	5	0	1	121	28,411	5	0	1	123					
				T5S	25,824	4	0	2	112	27,819	5	0	2	120	28,172	5	0	2	122					
				T5M	25,818	5	0	3	112	27,813	5	0	3	120	28,165	5	0	3	122					
				T5W	25,586	5	0	4	111	27,563	5	0	4	119	27,912	5	0	4	121					
				BLC	21,241	4	0	4	92	22,882	4	0	4	99	23,172	4	0	4	100					
				LCCO	15,170	2	0	4	66	16,342	2	0	4	71	16,549	2	0	4	72					
					15,150	5	0	5	66	16,321	5	0	5	71	16,527	5	0	5	72					

© 2011-2018 Acuity Brands Lighting, Inc. All rights reserved.

FEATURES & SPECIFICATIONS

INTENDED USE
The sleek design of the D-Series Size 1 reflects the embedded high performance LED technology. It is ideal for many commercial and municipal applications, such as parking lots, plazas, campuses, and streetscapes.

CONSTRUCTION
Single-piece die-cast aluminum housing has integral heat sink fins to optimize thermal management through conductive and convective cooling. Modular design allows for ease of maintenance and future light engine upgrades. The LED drivers are mounted in direct contact with the casting to promote low operating temperature and long life. Housing is completely sealed against moisture and environmental contaminants (IP65). Low EPA (1.01 ft^2) for optimized pole wind loading.

FINISH
Exterior parts are protected by a zinc-infused Super Durable TGIC thermoset powder coat finish that provides superior resistance to corrosion and weathering. A tightly controlled multi-stage process ensures a minimum 3 mils thickness for a finish that can withstand extreme climate changes without cracking or peeling. Available in both textured and non-textured finishes.

OPTICS
Precision-molded proprietary acrylic lenses are engineered for superior area lighting distribution, uniformity, and pole spacing. Light engines are available in standard 3000 K, 4000 K and 5000 K (70 CRI) configurations. The D-Series Size 1 has zero uplight and qualifies as a Nighttime Friendly™ product, meaning it is consistent with the LEED® and Green Globes™ criteria for eliminating wasteful uplight.

ELECTRICAL
Light engine configurations consist of high-efficacy LEDs mounted to metal-core circuit boards to maximize heat dissipation and promote long life (up to L85/100,000 hours at 25°C). Class 1 electronic drivers are designed to have a power factor >90%, THD <20%, and an expected life of 100,000 hours with <1% failure rate. Easily serviceable 10kV surge protection device meets a minimum Category C Low operation (per ANSI/IEEE C62.41.2).

INSTALLATION
Included mounting block and integral arm facilitate quick and easy installation. Stainless steel bolts fasten the mounting block securely to poles and walls, enabling the D-Series Size 1 to withstand up to a 3.0 G vibration load rating per ANSI C136.31. The D-Series Size 1 utilizes the AERIS™ series pole drilling pattern (template #8). Optional terminal block and NEMA photocontrol receptacle are also available.

LISTINGS
UL Listed for wet locations. Light engines are IP66 rated; luminaire is IP65 rated. Rated for -40°C minimum ambient. U.S. Patent No. D672,492 S. International patent pending.

DesignLights Consortium® (DLC) Premium qualified product and DLC qualified product. Not all versions of this product may be DLC Premium qualified or DLC qualified. Please check the DLC Qualified Products List at www.designlights.org/QPL to confirm which versions are qualified.

International Dark-Sky Association (IDA) Fixture Seal of Approval (FSA) is available for all products on this page utilizing 3000K color temperature only.

WARRANTY
5-year limited warranty. Complete warranty terms located at:
www.acuitybrands.com/CustomerResources/Terms_and_conditions.aspx

Note: Actual performance may differ as a result of end-user environment and application. All values are design or typical values, measured under laboratory conditions at 25 °C. Specifications subject to change without notice.

© 2011-2018 Acuity Brands Lighting, Inc. All rights reserved.

D-Series Size 1

LED Area Luminaire

Catalog Number

Notes

Type

Hit the Tab key or mouse over the page to see all interactive elements.

Specifications

EPA:	1.01 ft² (0.09 m²)
Length:	33″ (83.8 cm)
Width:	13″ (33.0 cm)
Height:	7-1/2″ (19.0 cm)
Weight (max):	27 lbs (12.2 kg)

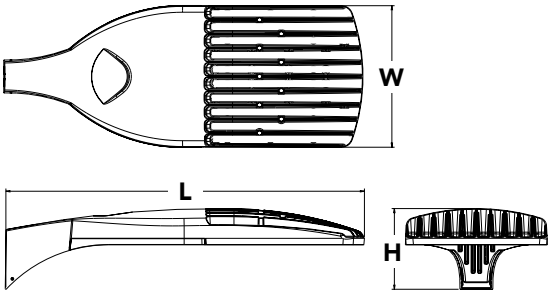

A+ Capable Luminaire

This item is an A+ capable luminaire, which has been designed and tested to provide consistent color appearance and system-level interoperability.

- All configurations of this luminaire meet the Acuity Brands' specification for chromatic consistency
- This luminaire is A+ Certified when ordered with DTL® controls marked by a shaded background. DTL DLL equipped luminaires meet the A+ specification for luminaire to photocontrol interoperability1
- This luminaire is part of an A+ Certified solution for ROAM® or XPoint™ Wireless control networks, providing out-of-the-box control compatibility with simple commissioning, when ordered with drivers and control options marked by a shaded background[1]

To learn more about A+, visit www.acuitybrands.com/aplus.

1. See ordering tree for details.
2. A+ Certified Solutions for ROAM require the order of one ROAM node per luminaire. Sold Separately: Link to Roam; Link to DTL DLL

A+ Capable options indicated by this color background.

Ordering Information

EXAMPLE: DSX1 LED P7 40K T3M MVOLT SPA DDBXD

DSX1LED

Series

DSX1 LED

LEDs

Forward optics

P1 P4 P7
P2 P5 P8
P3 P6 P9

Rotated optics

P10[1] P12[1]
P11[1] P13[1]

Color temperature

30K	3000 K
40K	4000 K
50K	5000 K
AMBPC	Amber phosphor converted[2]

Distribution

T1S	Type I short	T5S	Type V short
T2S	Type II short	T5M	Type V medium
T2M	Type II medium	T5W	Type V wide
T3S	Type III short	BLC	Backlight control[2,3]
T3M	Type III medium	LCCO	Left corner cutoff[2,3]
T4M	Type IV medium	RCCO	Right corner cutoff[2,3]
TFTM	Forward throw medium		
T5VS	Type V very short		

Voltage

MVOLT[4,5]
120[6]
208[5,6]
240[5,6]
277[6]
347[5,6,7]
480[5,6,7]

Mounting

Shipped included

SPA	Square pole mounting
RPA	Round pole mounting
WBA	Wall bracket
SPUMBA	Square pole universal mounting adaptor[8]
RPUMBA	Round pole universal mounting adaptor[8]

Shipped separately

KMA8 DDBXD U	Mast arm mounting bracket adaptor (specify finish)[9]

Control options

Shipped installed

NLTAIR2	nLight AIR generation 2 enabled[10]
PER	NEMA twist-lock receptacle only (controls ordered separate)[11]
PER5	Five-wire receptacle only (controls ordered separate)[11,12]
PER7	Seven-wire receptacle only (controls ordered separate)[11,12]
DMG	0-10V dimming extend out back of honsing for external control (leads exit fixture)
DS	Dual switching[13,14]
PIR	Bi-level, motion/ambient sensor, 8-15' mounting height, ambient sensor enabled at 5fc[5,15,16]
PIRH	Bi-level, motion/ambient sensor, 15-30' mounting height, ambient sensor enabled at 5fc[5,15,16]
PIRHN	Network, Bi-Level motion/ambient sensor[17]
PIR1FC3V	Bi-level, motion/ambient sensor, 8-15' mounting height, ambient sensor enabled at 1fc[5,15,16]
PIRH1FC3V	Bi-level, motion/ambient sensor, 15-30' mounting height, ambient sensor enabled at 1fc[5,15,16]
BL30	Bi-level switched dimming, 30%[5,14,18]
BL50	Bi-level switched dimming, 50%[5,14,18]
PNMTDD3	Part night, dim till dawn[5,19]
PNMT5D3	Part night, dim 5 hrs[5,19]
PNMT6D3	Part night, dim 6 hrs[5,19]
PNMT7D3	Part night, dim 7 hrs[5,19]
FAO	Field adjustable output[20]

Other options

Shipped installed

HS	House-side shield[21]
SF	Single fuse (120, 277, 347V)[6]
DF	Double fuse (208, 240, 480V)[6]
L90	Left rotated optics[1]
R90	Right rotated optics[1]

Shipped separately

BS	Bird spikes[22]
EGS	External glare shield[22]

Finish *(required)*

DDBXD	Dark bronze
DBLXD	Black
DNAXD	Natural aluminum
DWHXD	White
DDBTXD	Textured dark bronze
DBLBXD	Textured black
DNATXD	Textured natural aluminum
DWHGXD	Textured white

© 2011-2018 Acuity Brands Lighting, Inc. All rights reserved.

Ordering Information

Accessories

Ordered and shipped separately.

DLL127F 1.5 JU	Photocell - SSL twist-lock (120-277V) [23]
DLL347F 1.5 CUL JU	Photocell - SSL twist-lock (347V) [23]
DLL480F 1.5 CUL JU	Photocell - SSL twist-lock (480V) [23]
DSHORT SBK U	Shorting cap [23]
DSX1HS 30C U	House-side shield for 30 LED unit[21]
DSX1HS 40C U	House-side shield for 40 LED unit[21]
DSX1HS 60C U	House-side shield for 60 LED unit[21]
PUMBA DDBXD U*	Square and round pole universal mounting bracket (specify finish)[24]
KMA8 DDBXD U	Mast arm mounting bracket adaptor (specify finish) [8]

For more control options, visit DTL and ROAM online.

NOTES
1 P10, P11, P12 or P13 and rotated optics (L90, R90) only available together.
2 AMBPC is not available with BLC, LCCO, RCCO or P4, P7, P8, P9 or P13.
3 Not available with HS.
4 MVOLT driver operates on any line voltage from 120-277V (50/60 Hz).
5 Any PIRx with BL30, BL50 or PNMT, is not available with 208V, 240V, 347V, 480V or MVOLT. It is only available in 120V or 277V specified.
6 Single fuse (SF) requires 120V, 277V or 347V. Double fuse (DF) requires 208V, 240V or 480V.
7 Not available in P1 or P10. Not available with BL30, BL50 or PNMT options.
8 Existing drilled pole only. Available as a separate combination accessory; for retrofit use only: PUMBA (finish) U; 1.5 G vibration load rating per ANCI C136.31.
9 Must order fixture with SPA option. Must be ordered as a separate accessory; see Accessories information. For use with 2-3/8" mast arm (not included).
10 Must be ordered with PIRHN.
11 Photocell ordered and shipped as a separate line item from Acuity Brands Controls. See accessories. Not available with DS option. Shorting cap included.
12 If ROAM® node required, it must be ordered and shipped as a separate line item from Acuity Brands Controls. Not available with DCR. Node with integral dimming. Shorting cap included.
13 Provides 50/50fixture operation via (2) independent drivers. Not available with PER, PER5, PER7, PIR or PIRH. Not available P1, P2, P3, P4 or P5.
14 Requires (2) separately switched circuits.
15 Reference Motion Sensor table on page 3.
16 Reference PER table on page 3 to see functionality.
17 Must be ordered with NLTAIR2. For more information on nLight Air 2 visit this link.
18 Not available with 347V, 480V, PNMT, DS. For PER5 or PER7, see PER Table on page 3. Requires isolated neutral.
19 Not available with 347V, 480V, DS, BL30, BL50. For PER5 or PER7, see PER Table on page 3. Separate Dusk to Dawn required.
20 Not available with other dimming controls options
21 Not available with BLC, LCCO and RCCO distribution. Also available as a separate accessory; see Accessories information.
22 Must be ordered with fixture for factory pre-drilling.
23 Requires luminaire to be specified with PER, PER5 or PER7 option. See PER Table on page 3.
24 For retrofit use only.

External Glare Shield

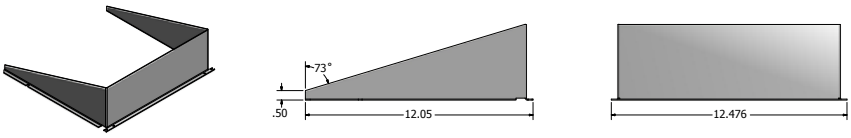

Drilling

HANDHOLE ORIENTATION

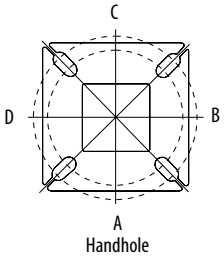

Template #8

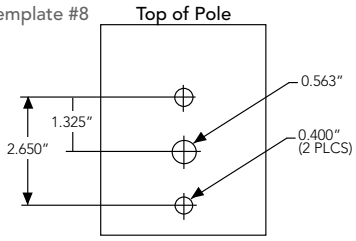

Tenon Mounting Slipfitter **

Tenon O.D.	Single Unit	2 at 180°	2 at 90°	3 at 120°	3 at 90°	4 at 90°
2-3/8"	AST20-190	AST20-280	AST20-290	AST20-320	AST20-390	AST20-490
2-7/8"	AST25-190	AST25-280	AST25-290	AST25-320	AST25-390	AST25-490
4"	AST35-190	AST35-280	AST35-290	AST35-320	AST35-390	AST35-490

Pole drilling nomenclature: # of heads at degree from handhole (default side A)					
DM19AS	DM28AS	DM29AS	DM32AS	DM39AS	DM49AS
1 @ 90°	2 @ 280°	2 @ 90°	3 @ 120°	3 @ 90°	4 @ 90°
Side B	Side B & D	Side B & C	Round pole only	Side B, C, & D	Sides A, B, C, D
Note: Review luminaire spec sheet for specific nomenclature					

Pole top or tenon O.D.	4.5" @ 90°	4" @ 90°	3.5" @ 90°	3" @ 90°	4.5" @ 120°	4" @ 120°	3.5" @ 120°	3" @ 120°
DSX SPA	Y	Y	Y	N	-	-	-	-
DSX RPA	Y	Y	N	N	Y	Y	Y	Y
DSX SPUMBA	Y	N	N	N	-	-	-	-
DSX RPUMBA	N	N	N	N	Y	Y	Y	N
					*3 fixtures @120 require round pole top/tenon.			

Photometric Diagrams

To see complete photometric reports or download .ies files for this product, visit Lithonia Lighting's D-Series Area Size 1 homepage.

Isofootcandle plots for the DSX1 LED 60C 1000 40K. Distances are in units of mounting height (25').

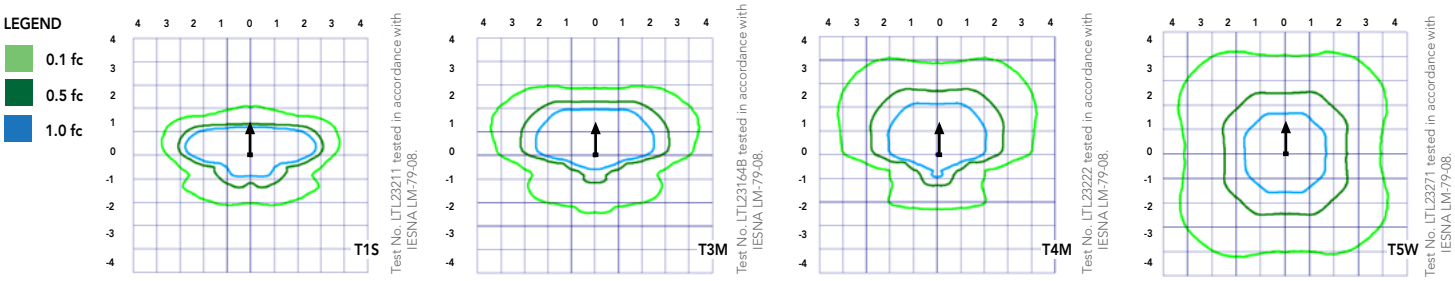

© 2011-2018 Acuity Brands Lighting, Inc. All rights reserved.

Performance Data

Lumen Ambient Temperature (LAT) Multipliers

Use these factors to determine relative lumen output for average ambient temperatures from 0-40°C (32-104°F).

Ambient		Lumen Multiplier
0°C	32°F	1.04
5°C	41°F	1.04
10°C	50°F	1.03
15°C	50°F	1.02
20°C	68°F	1.01
25°C	**77°F**	**1.00**
30°C	86°F	0.99
35°C	95°F	0.98
40°C	104°F	0.97

Projected LED Lumen Maintenance

Data references the extrapolated performance projections for the platforms noted in a **25°C ambient**, based on 10,000 hours of LED testing (tested per IESNA LM-80-08 and projected per IESNA TM-21-11).

To calculate LLF, use the lumen maintenance factor that corresponds to the desired number of operating hours below. For other lumen maintenance values, contact factory.

Operating Hours	0	25000	50000	100000
Lumen Maintenance Factor	1.00	0.96	0.92	0.85

Electrical Load

					Current (A)					
	Performance Package	LED Count	Drive Current	Wattage	120	208	240	277	347	480
Forward Optics (Non-Rotated)	P1	30	530	54	0.45	0.26	0.23	0.19	0.10	0.12
	P2	30	700	70	0.59	0.34	0.30	0.25	0.20	0.16
	P3	30	1050	102	0.86	0.50	0.44	0.38	0.30	0.22
	P4	30	1250	125	1.06	0.60	0.52	0.46	0.37	0.27
	P5	30	1400	138	1.16	0.67	0.58	0.51	0.40	0.29
	P6	40	1250	163	1.36	0.78	0.68	0.59	0.47	0.34
	P7	40	1400	183	1.53	0.88	0.76	0.66	0.53	0.38
	P8	60	1050	207	1.74	0.98	0.87	0.76	0.64	0.49
	P9	60	1250	241	2.01	1.16	1.01	0.89	0.70	0.51
Rotated Optics (Requires L90 or R90)	P10	60	530	106	0.90	0.52	0.47	0.43	0.33	0.27
	P11	60	700	137	1.15	0.67	0.60	0.53	0.42	0.32
	P12	60	1050	207	1.74	0.99	0.87	0.76	0.60	0.46
	P13	60	1250	231	1.93	1.12	0.97	0.86	0.67	0.49

Motion Sensor Default Settings						
Option	Dimmed State	High Level (when triggered)	Phototcell Operation	Dwell Time	Ramp-up Time	Ramp-down Time
PIR or PIRH	3V (37%) Output	10V (100%) Output	Enabled @ 5FC	5 min	3 sec	5 min
*PIR1FC3V or PIRH1FC3V	3V (37%) Output	10V (100%) Output	Enabled @ 1FC	5 min	3 sec	5 min
*for use with Inline Dusk to Dawn or timer.						

PER Table						
Control	PER (3 wire)	PER5 (5 wire)		PER7 (7 wire)		
			Wire 4/Wire5		Wire 4/Wire5	Wire 6/Wire7
Photocontrol Only (On/Off)	✔	⚠	Wired to dimming leads on driver	⚠	Wired to dimming leads on driver	Wires Capped inside fixture
ROAM	⊘	✔	Wired to dimming leads on driver	⚠	Wired to dimming leads on driver	Wires Capped inside fixture
ROAM with Motion (ROAM on/off only)	⊘	⚠	Wires Capped inside fixture	⚠	Wires Capped inside fixture	Wires Capped inside fixture
Future-proof*	⊘	⚠	Wired to dimming leads on driver	✔	Wired to dimming leads on driver	Wires Capped inside fixture
Future-proof* with Motion	⊘	⚠	Wires Capped inside fixture	✔	Wires Capped inside fixture	Wires Capped inside fixture

✔ Recommended
⊘ Will not work
⚠ Alternate

*Future-proof means: Ability to change controls in the future.

© 2011-2018 Acuity Brands Lighting, Inc. All rights reserved.

Performance Data

Lumen Output

Lumen values are from photometric tests performed in accordance with IESNA LM-79-08. Data is considered to be representative of the configurations shown, within the tolerances allowed by Lighting Facts. Contact factory for performance data on any configurations not shown here.

Forward Optics

LED Count	Drive Current	Power Package	System Watts	Dist. Type	30K (3000 K, 70 CRI)					40K (4000 K, 70 CRI)					50K (5000 K, 70 CRI)					AMBPC (Amber Phosphor Converted)				
					Lumens	B	U	G	LPW	Lumens	B	U	G	LPW	Lumens	B	U	G	LPW	Lumens	B	U	G	LPW
30	530	P1	54W	T1S	6,457	2	0	2	120	6,956	2	0	2	129	7,044	2	0	2	130	3,640	1	0	1	70
				T2S	6,450	2	0	2	119	6,949	2	0	2	129	7,037	2	0	2	130	3,813	1	0	1	73
				T2M	6,483	1	0	1	120	6,984	2	0	2	129	7,073	2	0	2	131	3,689	1	0	1	71
				T3S	6,279	2	0	2	116	6,764	2	0	2	125	6,850	2	0	2	127	3,770	1	0	1	73
				T3M	6,468	1	0	2	120	6,967	1	0	2	129	7,056	1	0	2	131	3,752	1	0	1	72
				T4M	6,327	1	0	2	117	6,816	1	0	2	126	6,902	1	0	2	128	3,758	1	0	1	72
				TFTM	6,464	1	0	2	120	6,963	1	0	2	129	7,051	1	0	2	131	3,701	1	0	1	71
				T5VS	6,722	2	0	0	124	7,242	3	0	0	134	7,334	3	0	0	136	3,928	2	0	0	76
				T5S	6,728	2	0	1	125	7,248	2	0	1	134	7,340	2	0	1	136	3,881	2	0	0	75
				T5M	6,711	3	0	1	124	7,229	3	0	1	134	7,321	3	0	2	136	3,930	2	0	1	76
				T5W	6,667	3	0	2	123	7,182	3	0	2	133	7,273	3	0	2	135	3,820	3	0	1	73
				BLC	5,299	1	0	1	98	5,709	1	0	2	106	5,781	1	0	2	107					
				LCCO	3,943	1	0	2	73	4,248	1	0	2	79	4,302	1	0	2	80					
				RCCO	3,943	1	0	2	73	4,248	1	0	2	79	4,302	1	0	2	80					
30	700	P2	70W	T1S	8,249	2	0	2	118	8,886	2	0	2	127	8,999	2	0	2	129	4,561	1	0	1	67
				T2S	8,240	2	0	2	118	8,877	2	0	2	127	8,989	2	0	2	128	4,777	1	0	1	70
				T2M	8,283	2	0	2	118	8,923	2	0	2	127	9,036	2	0	2	129	4,622	1	0	2	68
				T3S	8,021	2	0	2	115	8,641	2	0	2	123	8,751	2	0	2	125	4,724	1	0	1	69
				T3M	8,263	2	0	2	118	8,901	2	0	2	127	9,014	2	0	2	129	4,701	1	0	2	69
				T4M	8,083	2	0	2	115	8,708	2	0	2	124	8,818	2	0	2	126	4,709	1	0	2	69
				TFTM	8,257	2	0	2	118	8,896	2	0	2	127	9,008	2	0	2	129	4,638	1	0	2	68
				T5VS	8,588	3	0	0	123	9,252	3	0	0	132	9,369	3	0	0	134	4,922	2	0	0	72
				T5S	8,595	3	0	1	123	9,259	3	0	1	132	9,376	3	0	1	134	4,863	2	0	0	72
				T5M	8,573	3	0	2	122	9,236	3	0	2	132	9,353	3	0	2	134	4,924	3	0	1	72
				T5W	8,517	3	0	2	122	9,175	4	0	2	131	9,291	4	0	2	133	4,787	3	0	1	70
				BLC	6,770	1	0	2	97	7,293	1	0	2	104	7,386	1	0	2	106					
				LCCO	5,038	1	0	2	72	5,427	1	0	2	78	5,496	1	0	2	79					
				RCCO	5,038	1	0	2	72	5,427	1	0	2	78	5,496	1	0	2	79					
30	1050	P3	102W	T1S	11,661	2	0	2	114	12,562	3	0	3	123	12,721	3	0	3	125					
				T2S	11,648	2	0	2	114	12,548	3	0	3	123	12,707	3	0	3	125					
				T2M	11,708	2	0	2	115	12,613	2	0	2	124	12,773	2	0	2	125					
				T3S	11,339	2	0	2	111	12,215	3	0	3	120	12,370	3	0	3	121					
				T3M	11,680	2	0	2	115	12,582	2	0	2	123	12,742	2	0	2	125					
				T4M	11,426	2	0	3	112	12,309	2	0	3	121	12,465	2	0	3	122					
				TFTM	11,673	2	0	2	114	12,575	2	0	3	123	12,734	2	0	3	125					
				T5VS	12,140	3	0	1	119	13,078	3	0	1	128	13,244	3	0	1	130					
				T5S	12,150	3	0	1	119	13,089	3	0	1	128	13,254	3	0	1	130					
				T5M	12,119	4	0	2	119	13,056	4	0	2	128	13,221	4	0	2	130					
				T5W	12,040	4	0	3	118	12,970	4	0	3	127	13,134	4	0	3	129					
				BLC	9,570	1	0	2	94	10,310	1	0	2	101	10,440	1	0	2	102					
				LCCO	7,121	1	0	3	70	7,671	1	0	3	75	7,768	1	0	3	76					
				RCCO	7,121	1	0	3	70	7,671	1	0	3	75	7,768	1	0	3	76					
30	1250	P4	125W	T1S	13,435	3	0	3	107	14,473	3	0	3	116	14,657	3	0	3	117					
				T2S	13,421	3	0	3	107	14,458	3	0	3	116	14,641	3	0	3	117					
				T2M	13,490	2	0	2	108	14,532	3	0	3	116	14,716	3	0	3	118					
				T3S	13,064	3	0	3	105	14,074	3	0	3	113	14,252	3	0	3	114					
				T3M	13,457	2	0	2	108	14,497	2	0	2	116	14,681	2	0	2	117					
				T4M	13,165	2	0	3	105	14,182	2	0	3	113	14,362	2	0	3	115					
				TFTM	13,449	2	0	3	108	14,488	2	0	3	116	14,672	2	0	3	117					
				T5VS	13,987	4	0	1	112	15,068	4	0	1	121	15,259	4	0	1	122					
				T5S	13,999	3	0	1	112	15,080	3	0	1	121	15,271	3	0	1	122					
				T5M	13,963	4	0	2	112	15,042	4	0	2	120	15,233	4	0	2	122					
				T5W	13,872	4	0	3	111	14,944	4	0	3	120	15,133	4	0	3	121					
				BLC	11,027	1	0	2	88	11,879	1	0	2	95	12,029	1	0	2	96					
				LCCO	8,205	1	0	3	66	8,839	1	0	3	71	8,951	1	0	3	72					
				RCCO	8,205	1	0	3	66	8,839	1	0	3	71	8,951	1	0	3	72					
30	1400	P5	138W	T1S	14,679	3	0	3	106	15,814	3	0	3	115	16,014	3	0	3	116					
				T2S	14,664	3	0	3	106	15,797	3	0	3	114	15,997	3	0	3	116					
				T2M	14,739	3	0	3	107	15,878	3	0	3	115	16,079	3	0	3	117					
				T3S	14,274	3	0	3	103	15,377	3	0	3	111	15,572	3	0	3	113					
				T3M	14,704	2	0	3	107	15,840	3	0	3	115	16,040	3	0	3	116					
				T4M	14,384	2	0	3	104	15,496	3	0	3	112	15,692	3	0	3	114					
				TFTM	14,695	2	0	3	106	15,830	3	0	3	115	16,030	3	0	3	116					
				T5VS	15,283	4	0	1	111	16,464	4	0	1	119	16,672	4	0	1	121					
				T5S	15,295	3	0	1	111	16,477	4	0	1	119	16,686	4	0	1	121					
				T5M	15,257	4	0	2	111	16,435	4	0	2	119	16,644	4	0	2	121					
				T5W	15,157	4	0	3	110	16,328	4	0	3	118	16,534	4	0	3	120					
				BLC	12,048	1	0	2	87	12,979	1	0	2	94	13,143	1	0	2	95					
				LCCO	8,965	1	0	3	65	9,657	1	0	3	70	9,780	1	0	3	71					
					8,965	1	0	3	65	9,657	1	0	3	70	9,780	1	0	3	71					

© 2011-2018 Acuity Brands Lighting, Inc. All rights reserved.

Lumen Output

Lumen values are from photometric tests performed in accordance with IESNA LM-79-08. Data is considered to be representative of the configurations shown, within the tolerances allowed by Lighting Facts. Contact factory for performance data on any configurations not shown here.

Forward Optics

LED Count	Drive Current	Power Package	System Watts	Dist. Type	30K (3000 K, 70 CRI)					40K (4000 K, 70 CRI)					50K (5000 K, 70 CRI)					AMBPC (Amber Phosphor Converted)				
					Lumens	B	U	G	LPW	Lumens	B	U	G	LPW	Lumens	B	U	G	LPW	Lu-mens	B	U	G	LPW
40	1250	**P6**	163W	T1S	17,654	3	0	3	108	19,018	3	0	3	117	19,259	3	0	3	118					
				T2S	17,635	3	0	3	108	18,998	3	0	3	117	19,238	3	0	3	118					
				T2M	17,726	3	0	3	109	19,096	3	0	3	117	19,337	3	0	3	119					
				T3S	17,167	3	0	3	105	18,493	3	0	3	113	18,727	3	0	3	115					
				T3M	17,683	3	0	3	108	19,049	3	0	3	117	19,290	3	0	3	118					
				T4M	17,299	3	0	3	106	18,635	3	0	4	114	18,871	3	0	4	116					
				TFTM	17,672	3	0	3	108	19,038	3	0	4	117	19,279	3	0	4	118					
				T5VS	18,379	4	0	1	113	19,800	4	0	1	121	20,050	4	0	1	123					
				T5S	18,394	4	0	2	113	19,816	4	0	2	122	20,066	4	0	2	123					
				T5M	18,348	4	0	2	113	19,766	4	0	2	121	20,016	4	0	2	123					
				T5W	18,228	5	0	3	112	19,636	5	0	3	120	19,885	5	0	3	122					
				BLC	14,489	2	0	2	89	15,609	2	0	3	96	15,806	2	0	3	97					
				LCCO	10,781	1	0	3	66	11,614	1	0	3	71	11,761	2	0	3	72					
				RCCO	10,781	1	0	3	66	11,614	1	0	3	71	11,761	2	0	3	72					
40	1400	**P7**	183W	T1S	19,227	3	0	3	105	20,712	3	0	3	113	20,975	3	0	3	115					
				T2S	19,206	3	0	3	105	20,690	3	0	3	113	20,952	3	0	3	114					
				T2M	19,305	3	0	3	105	20,797	3	0	3	114	21,060	3	0	3	115					
				T3S	18,696	3	0	3	102	20,141	3	0	3	110	20,396	3	0	4	111					
				T3M	19,258	3	0	3	105	20,746	3	0	3	113	21,009	3	0	3	115					
				T4M	18,840	3	0	4	103	20,296	3	0	4	111	20,553	3	0	4	112					
				TFTM	19,246	3	0	4	105	20,734	3	0	4	113	20,996	3	0	4	115					
				T5VS	20,017	4	0	1	109	21,564	4	0	1	118	21,837	4	0	1	119					
				T5S	20,033	4	0	2	109	21,581	4	0	2	118	21,854	4	0	2	119					
				T5M	19,983	4	0	2	109	21,527	5	0	3	118	21,799	5	0	3	119					
				T5W	19,852	5	0	3	108	21,386	5	0	3	117	21,656	5	0	3	118					
				BLC	15,780	2	0	3	86	16,999	2	0	3	93	17,214	2	0	3	94					
				LCCO	11,742	2	0	3	64	12,649	2	0	3	69	12,809	2	0	3	70					
				RCCO	11,742	2	0	3	64	12,649	2	0	3	69	12,809	2	0	3	70					
60	1050	**P8**	207W	T1S	22,490	3	0	3	109	24,228	3	0	3	117	24,535	3	0	3	119					
				T2S	22,466	3	0	4	109	24,202	3	0	4	117	24,509	3	0	4	118					
				T2M	22,582	3	0	3	109	24,327	3	0	3	118	24,635	3	0	3	119					
				T3S	21,870	3	0	4	106	23,560	3	0	4	114	23,858	3	0	4	115					
				T3M	22,527	3	0	4	109	24,268	3	0	4	117	24,575	3	0	4	119					
				T4M	22,038	3	0	4	106	23,741	3	0	4	115	24,041	3	0	4	116					
				TFTM	22,513	3	0	4	109	24,253	3	0	4	117	24,560	3	0	4	119					
				T5VS	23,415	5	0	1	113	25,224	5	0	1	122	25,543	5	0	1	123					
				T5S	23,434	4	0	2	113	25,244	4	0	2	122	25,564	4	0	2	123					
				T5M	23,374	5	0	3	113	25,181	5	0	3	122	25,499	5	0	3	123					
				T5W	23,221	5	0	4	112	25,016	5	0	4	121	25,332	5	0	4	122					
				BLC	18,458	2	0	3	89	19,885	2	0	3	96	20,136	2	0	3	97					
				LCCO	13,735	2	0	3	66	14,796	2	0	4	71	14,983	2	0	4	72					
				RCCO	13,735	2	0	3	66	14,796	2	0	4	71	14,983	2	0	4	72					
60	1250	**P9**	241W	T1S	25,575	3	0	3	106	27,551	3	0	3	114	27,900	3	0	3	116					
				T2S	25,548	3	0	4	106	27,522	3	0	4	114	27,871	3	0	4	116					
				T2M	25,680	3	0	3	107	27,664	3	0	3	115	28,014	3	0	3	116					
				T3S	24,870	3	0	4	103	26,791	3	0	4	111	27,130	3	0	4	113					
				T3M	25,617	3	0	4	106	27,597	3	0	4	115	27,946	3	0	4	116					
				T4M	25,061	3	0	4	104	26,997	3	0	4	112	27,339	3	0	4	113					
				TFTM	25,602	3	0	4	106	27,580	3	0	4	114	27,929	3	0	4	116					
				T5VS	26,626	5	0	1	110	28,684	5	0	1	119	29,047	5	0	1	121					
				T5S	26,648	4	0	2	111	28,707	5	0	2	119	29,070	5	0	2	121					
				T5M	26,581	5	0	3	110	28,635	5	0	3	119	28,997	5	0	3	120					
				T5W	26,406	5	0	4	110	28,447	5	0	4	118	28,807	5	0	4	120					
				BLC	20,990	2	0	3	87	22,612	2	0	3	94	22,898	2	0	3	95					
				LCCO	15,619	2	0	4	65	16,825	2	0	4	70	17,038	2	0	4	71					
					15,619	2	0	4	65	16,825	2	0	4	70	17,038	2	0	4	71					

© 2011-2018 Acuity Brands Lighting, Inc. All rights reserved.

Lumen Output

Lumen values are from photometric tests performed in accordance with IESNA LM-79-08. Data is considered to be representative of the configurations shown, within the tolerances allowed by Lighting Facts. Contact factory for performance data on any configurations not shown here.

Rotated Optics

LED Count	Drive Current	Power Package	System Watts	Dist. Type	30K (3000 K, 70 CRI)					40K (4000 K, 70 CRI)					50K (5000 K, 70 CRI)					AMBPC (Amber Phosphor Converted)				
					Lumens	B	U	G	LPW	Lumens	B	U	G	LPW	Lumens	B	U	G	LPW	Lumens	B	U	G	LPW
60	530	**P10**	106W	T1S	13,042	3	0	3	123	14,050	3	0	3	133	14,228	3	0	3	134	7,167	2	0	2	72
				T2S	12,967	4	0	4	122	13,969	4	0	4	132	14,146	4	0	4	133	7,507	2	0	2	76
				T2M	13,201	3	0	3	125	14,221	3	0	3	134	14,401	3	0	3	136	7,263	2	0	2	73
				T3S	12,766	4	0	4	120	13,752	4	0	4	130	13,926	4	0	4	131	7,424	2	0	2	75
				T3M	13,193	4	0	4	124	14,213	4	0	4	134	14,393	4	0	4	136	7,387	2	0	2	75
				T4M	12,944	4	0	4	122	13,945	4	0	4	132	14,121	4	0	4	133	7,400	2	0	2	75
				TFTM	13,279	4	0	4	125	14,305	4	0	4	135	14,486	4	0	4	137	7,288	1	0	2	74
				T5VS	13,372	3	0	1	126	14,405	4	0	1	136	14,588	4	0	1	138	7,734	3	0	1	78
				T5S	13,260	3	0	1	125	14,284	3	0	1	135	14,465	3	0	1	136	7,641	3	0	0	77
				T5M	13,256	4	0	2	125	14,281	4	0	2	135	14,462	4	0	2	136	7,737	3	0	2	78
				T5W	13,137	4	0	3	124	14,153	4	0	3	134	14,332	4	0	3	135	7,522	3	0	2	76
				BLC	10,906	3	0	3	103	11,749	3	0	3	111	11,898	3	0	3	112					
				LCCO	7,789	1	0	3	73	8,391	1	0	3	79	8,497	1	0	3	80					
				RCCO	7,779	4	0	4	73	8,380	4	0	4	79	8,486	4	0	4	80					
60	700	**P11**	137W	T1S	16,556	3	0	3	121	17,835	3	0	3	130	18,061	4	0	4	132	8,952	2	0	2	68
				T2S	16,461	4	0	4	120	17,733	4	0	4	129	17,957	4	0	4	131	9,377	2	0	2	72
				T2M	16,758	4	0	4	122	18,053	4	0	4	132	18,281	4	0	4	133	9,072	2	0	2	69
				T3S	16,205	4	0	4	118	17,457	4	0	4	127	17,678	4	0	4	129	9,273	2	0	2	71
				T3M	16,748	4	0	4	122	18,042	4	0	4	132	18,271	4	0	4	133	9,227	2	0	2	70
				T4M	16,432	4	0	4	120	17,702	4	0	4	129	17,926	4	0	4	131	9,243	2	0	2	71
				TFTM	16,857	4	0	4	123	18,159	4	0	4	133	18,389	4	0	4	134	9,103	2	0	2	69
				T5VS	16,975	4	0	1	124	18,287	4	0	1	133	18,518	4	0	1	135	9,661	3	0	1	74
				T5S	16,832	4	0	1	123	18,133	4	0	2	132	18,362	4	0	2	134	9,544	3	0	1	73
				T5M	16,828	4	0	2	123	18,128	4	0	2	132	18,358	4	0	2	134	9,665	3	0	2	74
				T5W	16,677	4	0	3	122	17,966	5	0	3	131	18,193	5	0	3	133	9,395	4	0	2	72
				BLC	13,845	3	0	3	101	14,915	3	0	3	109	15,103	3	0	3	110					
				LCCO	9,888	1	0	3	72	10,652	2	0	3	78	10,787	2	0	3	79					
				RCCO	9,875	4	0	4	72	10,638	4	0	4	78	10,773	4	0	4	79					
60	1050	**P12**	207W	T1S	22,996	4	0	4	111	24,773	4	0	4	120	25,087	4	0	4	121					
				T2S	22,864	4	0	4	110	24,631	5	0	5	119	24,943	5	0	5	120					
				T2M	23,277	4	0	4	112	25,075	4	0	4	121	25,393	4	0	4	123					
				T3S	22,509	4	0	4	109	24,248	5	0	5	117	24,555	5	0	5	119					
				T3M	23,263	4	0	4	112	25,061	4	0	4	121	25,378	4	0	4	123					
				T4M	22,824	5	0	5	110	24,588	5	0	5	119	24,899	5	0	5	120					
				TFTM	23,414	5	0	5	113	25,223	5	0	5	122	25,543	5	0	5	123					
				T5VS	23,579	5	0	1	114	25,401	5	0	1	123	25,722	5	0	1	124					
				T5S	23,380	4	0	2	113	25,187	4	0	2	122	25,506	4	0	2	123					
				T5M	23,374	5	0	3	113	25,181	5	0	3	122	25,499	5	0	3	123					
				T5W	23,165	5	0	4	112	24,955	5	0	4	121	25,271	5	0	4	122					
				BLC	19,231	4	0	4	93	20,717	4	0	4	100	20,979	4	0	4	101					
				LCCO	13,734	2	0	3	66	14,796	2	0	4	71	14,983	2	0	4	72					
				RCCO	13,716	4	0	4	66	14,776	4	0	4	71	14,963	4	0	4	72					
60	1250	**P13**	231W	T1S	25,400	4	0	4	110	27,363	4	0	4	118	27,709	4	0	4	120					
				T2S	25,254	5	0	5	109	27,205	5	0	5	118	27,550	5	0	5	119					
				T2M	25,710	4	0	4	111	27,696	4	0	4	120	28,047	4	0	4	121					
				T3S	24,862	5	0	5	108	26,783	5	0	5	116	27,122	5	0	5	117					
				T3M	25,695	5	0	5	111	27,680	5	0	5	120	28,031	5	0	5	121					
				T4M	25,210	5	0	5	109	27,158	5	0	5	118	27,502	5	0	5	119					
				TFTM	25,861	5	0	5	112	27,860	5	0	5	121	28,212	5	0	5	122					
				T5VS	26,043	5	0	1	113	28,056	5	0	1	121	28,411	5	0	1	123					
				T5S	25,824	4	0	2	112	27,819	5	0	2	120	28,172	5	0	2	122					
				T5M	25,818	5	0	3	112	27,813	5	0	3	120	28,165	5	0	3	122					
				T5W	25,586	5	0	4	111	27,563	5	0	4	119	27,912	5	0	4	121					
				BLC	21,241	4	0	4	92	22,882	4	0	4	99	23,172	4	0	4	100					
				LCCO	15,170	2	0	4	66	16,342	2	0	4	71	16,549	2	0	4	72					
					15,150	5	0	5	66	16,321	5	0	5	71	16,527	5	0	5	72					

© 2011-2018 Acuity Brands Lighting, Inc. All rights reserved.

FEATURES & SPECIFICATIONS

INTENDED USE
The sleek design of the D-Series Size 1 reflects the embedded high performance LED technology. It is ideal for many commercial and municipal applications, such as parking lots, plazas, campuses, and streetscapes.

CONSTRUCTION
Single-piece die-cast aluminum housing has integral heat sink fins to optimize thermal management through conductive and convective cooling. Modular design allows for ease of maintenance and future light engine upgrades. The LED drivers are mounted in direct contact with the casting to promote low operating temperature and long life. Housing is completely sealed against moisture and environmental contaminants (IP65). Low EPA (1.01 ft^2) for optimized pole wind loading.

FINISH
Exterior parts are protected by a zinc-infused Super Durable TGIC thermoset powder coat finish that provides superior resistance to corrosion and weathering. A tightly controlled multi-stage process ensures a minimum 3 mils thickness for a finish that can withstand extreme climate changes without cracking or peeling. Available in both textured and non-textured finishes.

OPTICS
Precision-molded proprietary acrylic lenses are engineered for superior area lighting distribution, uniformity, and pole spacing. Light engines are available in standard 3000 K, 4000 K and 5000 K (70 CRI) configurations. The D-Series Size 1 has zero uplight and qualifies as a Nighttime Friendly™ product, meaning it is consistent with the LEED® and Green Globes™ criteria for eliminating wasteful uplight.

ELECTRICAL
Light engine configurations consist of high-efficacy LEDs mounted to metal-core circuit boards to maximize heat dissipation and promote long life (up to L85/100,000 hours at 25°C). Class 1 electronic drivers are designed to have a power factor >90%, THD <20%, and an expected life of 100,000 hours with <1% failure rate. Easily serviceable 10kV surge protection device meets a minimum Category C Low operation (per ANSI/IEEE C62.41.2).

INSTALLATION
Included mounting block and integral arm facilitate quick and easy installation. Stainless steel bolts fasten the mounting block securely to poles and walls, enabling the D-Series Size 1 to withstand up to a 3.0 G vibration load rating per ANSI C136.31. The D-Series Size 1 utilizes the AERIS™ series pole drilling pattern (template #8). Optional terminal block and NEMA photocontrol receptacle are also available.

LISTINGS
UL Listed for wet locations. Light engines are IP66 rated; luminaire is IP65 rated. Rated for -40°C minimum ambient. U.S. Patent No. D672,492 S. International patent pending.

DesignLights Consortium® (DLC) Premium qualified product and DLC qualified product. Not all versions of this product may be DLC Premium qualified or DLC qualified. Please check the DLC Qualified Products List at www.designlights.org/QPL to confirm which versions are qualified.

International Dark-Sky Association (IDA) Fixture Seal of Approval (FSA) is available for all products on this page utilizing 3000K color temperature only.

WARRANTY
5-year limited warranty. Complete warranty terms located at:
www.acuitybrands.com/CustomerResources/Terms_and_conditions.aspx

Note: Actual performance may differ as a result of end-user environment and application. All values are design or typical values, measured under laboratory conditions at 25 °C. Specifications subject to change without notice.

© 2011-2018 Acuity Brands Lighting, Inc. All rights reserved.

D-Series Size 1

LED Area Luminaire

Catalog Number

Notes

Type

Hit the Tab key or mouse over the page to see all interactive elements.

Specifications

EPA:	1.01 ft² (0.09 m²)
Length:	33″ (83.8 cm)
Width:	13″ (33.0 cm)
Height:	7-1/2″ (19.0 cm)
Weight (max):	27 lbs (12.2 kg)

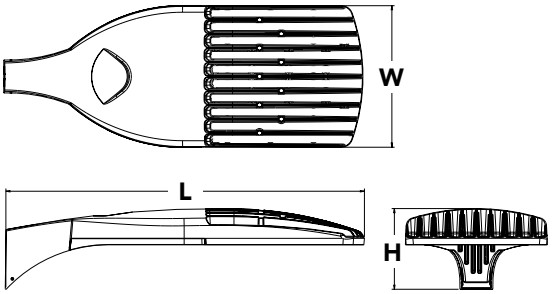

A+ Capable Luminaire

This item is an A+ capable luminaire, which has been designed and tested to provide consistent color appearance and system-level interoperability.

- All configurations of this luminaire meet the Acuity Brands' specification for chromatic consistency
- This luminaire is A+ Certified when ordered with DTL® controls marked by a shaded background. DTL DLL equipped luminaires meet the A+ specification for luminaire to photocontrol interoperability1
- This luminaire is part of an A+ Certified solution for ROAM® or XPoint™ Wireless control networks, providing out-of-the-box control compatibility with simple commissioning, when ordered with drivers and control options marked by a shaded background[1]

To learn more about A+, visit www.acuitybrands.com/aplus.

1. See ordering tree for details.
2. A+ Certified Solutions for ROAM require the order of one ROAM node per luminaire. Sold Separately: Link to Roam; Link to DTL DLL

A+ Capable options indicated by this color background.

Ordering Information

EXAMPLE: DSX1 LED P7 40K T3M MVOLT SPA DDBXD

DSX1LED

Series

DSX1 LED

LEDs

Forward optics

P1	P4	P7
P2	P5	P8
P3	P6	P9

Rotated optics

P10[1]	P12[1]
P11[1]	P13[1]

Color temperature

30K	3000 K
40K	4000 K
50K	5000 K
AMBPC	Amber phosphor converted[2]

Distribution

T1S	Type I short	T5S	Type V short
T2S	Type II short	T5M	Type V medium
T2M	Type II medium	T5W	Type V wide
T3S	Type III short	BLC	Backlight control[2,3]
T3M	Type III medium	LCCO	Left corner cutoff[2,3]
T4M	Type IV medium	RCCO	Right corner cutoff[2,3]
TFTM	Forward throw medium		
T5VS	Type V very short		

Voltage

MVOLT[4,5]
120[6]
208[5,6]
240[5,6]
277[6]
347[5,6,7]
480[5,6,7]

Mounting

Shipped included

SPA	Square pole mounting
RPA	Round pole mounting
WBA	Wall bracket
SPUMBA	Square pole universal mounting adaptor[8]
RPUMBA	Round pole universal mounting adaptor[8]

Shipped separately

KMA8 DDBXD U	Mast arm mounting bracket adaptor (specify finish)[9]

Control options

Shipped installed

NLTAIR2	nLight AIR generation 2 enabled[10]
PER	NEMA twist-lock receptacle only (controls ordered separate)[11]
PER5	Five-wire receptacle only (controls ordered separate)[11,12]
PER7	Seven-wire receptacle only (controls ordered separate)[11,12]
DMG	0-10V dimming extend out back of honsing for external control (leads exit fixture)
DS	Dual switching[13,14]
PIR	Bi-level, motion/ambient sensor, 8-15' mounting height, ambient sensor enabled at 5fc[5,15,16]
PIRH	Bi-level, motion/ambient sensor, 15-30' mounting height, ambient sensor enabled at 5fc[5,15,16]
PIRHN	Network, Bi-Level motion/ambient sensor[17]
PIR1FC3V	Bi-level, motion/ambient sensor, 8-15' mounting height, ambient sensor enabled at 1fc[5,15,16]
PIRH1FC3V	Bi-level, motion/ambient sensor, 15-30' mounting height, ambient sensor enabled at 1fc[5,15,16]
BL30	Bi-level switched dimming, 30%[5,14,18]
BL50	Bi-level switched dimming, 50%[5,14,18]
PNMTDD3	Part night, dim till dawn[5,19]
PNMT5D3	Part night, dim 5 hrs[5,19]
PNMT6D3	Part night, dim 6 hrs[5,19]
PNMT7D3	Part night, dim 7 hrs[5,19]
FAO	Field adjustable output[20]

Other options

Shipped installed

HS	House-side shield[21]
SF	Single fuse (120, 277, 347V)[6]
DF	Double fuse (208, 240, 480V)[6]
L90	Left rotated optics[1]
R90	Right rotated optics[1]

Shipped separately

BS	Bird spikes[22]
EGS	External glare shield[22]

Finish *(required)*

DDBXD	Dark bronze
DBLXD	Black
DNAXD	Natural aluminum
DWHXD	White
DDBTXD	Textured dark bronze
DBLBXD	Textured black
DNATXD	Textured natural aluminum
DWHGXD	Textured white

© 2011-2018 Acuity Brands Lighting, Inc. All rights reserved.

Ordering Information

Accessories

Ordered and shipped separately.

DLL127F 1.5 JU	Photocell - SSL twist-lock (120-277V) [23]
DLL347F 1.5 CUL JU	Photocell - SSL twist-lock (347V) [23]
DLL480F 1.5 CUL JU	Photocell - SSL twist-lock (480V) [23]
DSHORT SBK U	Shorting cap [23]
DSX1HS 30C U	House-side shield for 30 LED unit[21]
DSX1HS 40C U	House-side shield for 40 LED unit[21]
DSX1HS 60C U	House-side shield for 60 LED unit[21]
PUMBA DDBXD U*	Square and round pole universal mounting bracket (specify finish)[24]
KMA8 DDBXD U	Mast arm mounting bracket adaptor (specify finish) [8]

For more control options, visit DTL and ROAM online.

NOTES
1 P10, P11, P12 or P13 and rotated optics (L90, R90) only available together.
2 AMBPC is not available with BLC, LCCO, RCCO or P4, P7, P8, P9 or P13.
3 Not available with HS.
4 MVOLT driver operates on any line voltage from 120-277V (50/60 Hz).
5 Any PIRx with BL30, BL50 or PNMT, is not available with 208V, 240V, 347V, 480V or MVOLT. It is only available in 120V or 277V specified.
6 Single fuse (SF) requires 120V, 277V or 347V. Double fuse (DF) requires 208V, 240V or 480V.
7 Not available in P1 or P10. Not available with BL30, BL50 or PNMT options.
8 Existing drilled pole only. Available as a separate combination accessory; for retrofit use only: PUMBA (finish) U; 1.5 G vibration load rating per ANCI C136.31.
9 Must order fixture with SPA option. Must be ordered as a separate accessory; see Accessories information. For use with 2-3/8" mast arm (not included).
10 Must be ordered with PIRHN.
11 Photocell ordered and shipped as a separate line item from Acuity Brands Controls. See accessories. Not available with DS option. Shorting cap included.
12 If ROAM® node required, it must be ordered and shipped as a separate line item from Acuity Brands Controls. Not available with DCR. Node with integral dimming. Shorting cap included.
13 Provides 50/50fixture operation via (2) independent drivers. Not available with PER, PER5, PER7, PIR or PIRH. Not available P1, P2, P3, P4 or P5.
14 Requires (2) separately switched circuits.
15 Reference Motion Sensor table on page 3.
16 Reference PER table on page 3 to see functionality.
17 Must be ordered with NLTAIR2. For more information on nLight Air 2 visit this link.
18 Not available with 347V, 480V, PNMT, DS. For PER5 or PER7, see PER Table on page 3. Requires isolated neutral.
19 Not available with 347V, 480V, DS, BL30, BL50. For PER5 or PER7, see PER Table on page 3. Separate Dusk to Dawn required.
20 Not available with other dimming controls options
21 Not available with BLC, LCCO and RCCO distribution. Also available as a separate accessory; see Accessories information.
22 Must be ordered with fixture for factory pre-drilling.
23 Requires luminaire to be specified with PER, PER5 or PER7 option. See PER Table on page 3.
24 For retrofit use only.

External Glare Shield

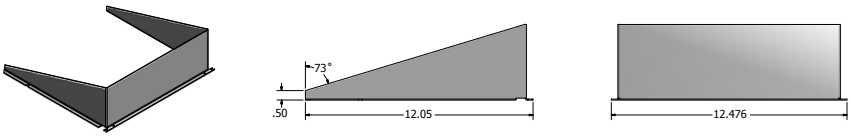

Drilling

HANDHOLE ORIENTATION

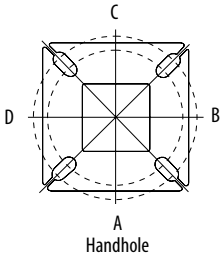

Template #8

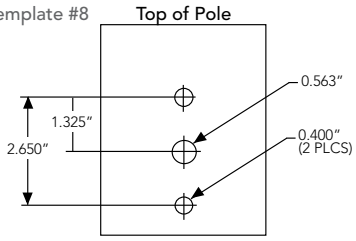

Tenon Mounting Slipfitter **

Tenon O.D.	Single Unit	2 at 180°	2 at 90°	3 at 120°	3 at 90°	4 at 90°
2-3/8"	AST20-190	AST20-280	AST20-290	AST20-320	AST20-390	AST20-490
2-7/8"	AST25-190	AST25-280	AST25-290	AST25-320	AST25-390	AST25-490
4"	AST35-190	AST35-280	AST35-290	AST35-320	AST35-390	AST35-490

Pole drilling nomenclature: # of heads at degree from handhole (default side A)					
DM19AS	DM28AS	DM29AS	DM32AS	DM39AS	DM49AS
1 @ 90°	2 @ 280°	2 @ 90°	3 @ 120°	3 @ 90°	4 @ 90°
Side B	Side B & D	Side B & C	Round pole only	Side B, C, & D	Sides A, B, C, D
Note: Review luminaire spec sheet for specific nomenclature					

Pole top or tenon O.D.	4.5" @ 90°	4" @ 90°	3.5" @ 90°	3" @ 90°	4.5" @ 120°	4" @ 120°	3.5" @ 120°	3" @ 120°
DSX SPA	Y	Y	Y	N	-	-	-	-
DSX RPA	Y	Y	N	N	Y	Y	Y	Y
DSX SPUMBA	Y	N	N	N	-	-	-	-
DSX RPUMBA	N	N	N	N	Y	Y	Y	N
					*3 fixtures @120 require round pole top/tenon.			

Photometric Diagrams

To see complete photometric reports or download .ies files for this product, visit Lithonia Lighting's D-Series Area Size 1 homepage.

Isofootcandle plots for the DSX1 LED 60C 1000 40K. Distances are in units of mounting height (25').

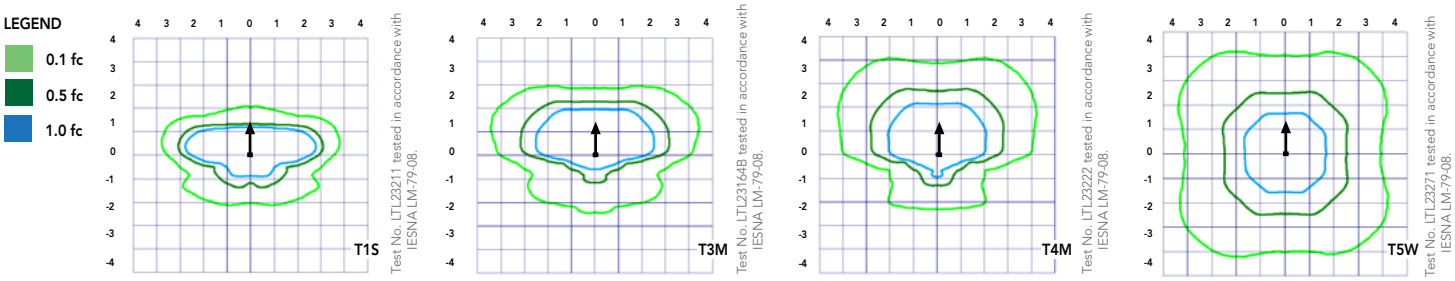

© 2011-2018 Acuity Brands Lighting, Inc. All rights reserved.

Performance Data

Lumen Ambient Temperature (LAT) Multipliers

Use these factors to determine relative lumen output for average ambient temperatures from 0-40°C (32-104°F).

Ambient		Lumen Multiplier
0°C	32°F	1.04
5°C	41°F	1.04
10°C	50°F	1.03
15°C	50°F	1.02
20°C	68°F	1.01
25°C	**77°F**	**1.00**
30°C	86°F	0.99
35°C	95°F	0.98
40°C	104°F	0.97

Projected LED Lumen Maintenance

Data references the extrapolated performance projections for the platforms noted in a **25°C ambient**, based on 10,000 hours of LED testing (tested per IESNA LM-80-08 and projected per IESNA TM-21-11).

To calculate LLF, use the lumen maintenance factor that corresponds to the desired number of operating hours below. For other lumen maintenance values, contact factory.

Operating Hours	0	25000	50000	100000
Lumen Maintenance Factor	1.00	0.96	0.92	0.85

Electrical Load

					Current (A)					
	Performance Package	LED Count	Drive Current	Wattage	120	208	240	277	347	480
Forward Optics (Non-Rotated)	P1	30	530	54	0.45	0.26	0.23	0.19	0.10	0.12
	P2	30	700	70	0.59	0.34	0.30	0.25	0.20	0.16
	P3	30	1050	102	0.86	0.50	0.44	0.38	0.30	0.22
	P4	30	1250	125	1.06	0.60	0.52	0.46	0.37	0.27
	P5	30	1400	138	1.16	0.67	0.58	0.51	0.40	0.29
	P6	40	1250	163	1.36	0.78	0.68	0.59	0.47	0.34
	P7	40	1400	183	1.53	0.88	0.76	0.66	0.53	0.38
	P8	60	1050	207	1.74	0.98	0.87	0.76	0.64	0.49
	P9	60	1250	241	2.01	1.16	1.01	0.89	0.70	0.51
Rotated Optics (Requires L90 or R90)	P10	60	530	106	0.90	0.52	0.47	0.43	0.33	0.27
	P11	60	700	137	1.15	0.67	0.60	0.53	0.42	0.32
	P12	60	1050	207	1.74	0.99	0.87	0.76	0.60	0.46
	P13	60	1250	231	1.93	1.12	0.97	0.86	0.67	0.49

Motion Sensor Default Settings						
Option	Dimmed State	High Level (when triggered)	Phototcell Operation	Dwell Time	Ramp-up Time	Ramp-down Time
PIR or PIRH	3V (37%) Output	10V (100%) Output	Enabled @ 5FC	5 min	3 sec	5 min
*PIR1FC3V or PIRH1FC3V	3V (37%) Output	10V (100%) Output	Enabled @ 1FC	5 min	3 sec	5 min
*for use with Inline Dusk to Dawn or timer.						

PER Table						
Control	PER (3 wire)	PER5 (5 wire)		PER7 (7 wire)		
			Wire 4/Wire5		Wire 4/Wire5	Wire 6/Wire7
Photocontrol Only (On/Off)	✔	⚠	Wired to dimming leads on driver	⚠	Wired to dimming leads on driver	Wires Capped inside fixture
ROAM	⊘	✔	Wired to dimming leads on driver	⚠	Wired to dimming leads on driver	Wires Capped inside fixture
ROAM with Motion (ROAM on/off only)	⊘	⚠	Wires Capped inside fixture	⚠	Wires Capped inside fixture	Wires Capped inside fixture
Future-proof*	⊘	⚠	Wired to dimming leads on driver	✔	Wired to dimming leads on driver	Wires Capped inside fixture
Future-proof* with Motion	⊘	⚠	Wires Capped inside fixture	✔	Wires Capped inside fixture	Wires Capped inside fixture

✔ Recommended
⊘ Will not work
⚠ Alternate

*Future-proof means: Ability to change controls in the future.

© 2011-2018 Acuity Brands Lighting, Inc. All rights reserved.

Performance Data

Lumen Output

Lumen values are from photometric tests performed in accordance with IESNA LM-79-08. Data is considered to be representative of the configurations shown, within the tolerances allowed by Lighting Facts. Contact factory for performance data on any configurations not shown here.

Forward Optics

LED Count	Drive Current	Power Package	System Watts	Dist. Type	30K (3000 K, 70 CRI)					40K (4000 K, 70 CRI)					50K (5000 K, 70 CRI)					AMBPC (Amber Phosphor Converted)				
					Lumens	B	U	G	LPW	Lumens	B	U	G	LPW	Lumens	B	U	G	LPW	Lumens	B	U	G	LPW
30	530	P1	54W	T1S	6,457	2	0	2	120	6,956	2	0	2	129	7,044	2	0	2	130	3,640	1	0	1	70
				T2S	6,450	2	0	2	119	6,949	2	0	2	129	7,037	2	0	2	130	3,813	1	0	1	73
				T2M	6,483	1	0	1	120	6,984	2	0	2	129	7,073	2	0	2	131	3,689	1	0	1	71
				T3S	6,279	2	0	2	116	6,764	2	0	2	125	6,850	2	0	2	127	3,770	1	0	1	73
				T3M	6,468	1	0	2	120	6,967	1	0	2	129	7,056	1	0	2	131	3,752	1	0	1	72
				T4M	6,327	1	0	2	117	6,816	1	0	2	126	6,902	1	0	2	128	3,758	1	0	1	72
				TFTM	6,464	1	0	2	120	6,963	1	0	2	129	7,051	1	0	2	131	3,701	1	0	1	71
				T5VS	6,722	2	0	0	124	7,242	3	0	0	134	7,334	3	0	0	136	3,928	2	0	0	76
				T5S	6,728	2	0	1	125	7,248	2	0	1	134	7,340	2	0	1	136	3,881	2	0	0	75
				T5M	6,711	3	0	1	124	7,229	3	0	1	134	7,321	3	0	2	136	3,930	2	0	1	76
				T5W	6,667	3	0	2	123	7,182	3	0	2	133	7,273	3	0	2	135	3,820	3	0	1	73
				BLC	5,299	1	0	1	98	5,709	1	0	2	106	5,781	1	0	2	107					
				LCCO	3,943	1	0	2	73	4,248	1	0	2	79	4,302	1	0	2	80					
				RCCO	3,943	1	0	2	73	4,248	1	0	2	79	4,302	1	0	2	80					
30	700	P2	70W	T1S	8,249	2	0	2	118	8,886	2	0	2	127	8,999	2	0	2	129	4,561	1	0	1	67
				T2S	8,240	2	0	2	118	8,877	2	0	2	127	8,989	2	0	2	128	4,777	1	0	1	70
				T2M	8,283	2	0	2	118	8,923	2	0	2	127	9,036	2	0	2	129	4,622	1	0	2	68
				T3S	8,021	2	0	2	115	8,641	2	0	2	123	8,751	2	0	2	125	4,724	1	0	1	69
				T3M	8,263	2	0	2	118	8,901	2	0	2	127	9,014	2	0	2	129	4,701	1	0	2	69
				T4M	8,083	2	0	2	115	8,708	2	0	2	124	8,818	2	0	2	126	4,709	1	0	2	69
				TFTM	8,257	2	0	2	118	8,896	2	0	2	127	9,008	2	0	2	129	4,638	1	0	2	68
				T5VS	8,588	3	0	0	123	9,252	3	0	0	132	9,369	3	0	0	134	4,922	2	0	0	72
				T5S	8,595	3	0	1	123	9,259	3	0	1	132	9,376	3	0	1	134	4,863	2	0	0	72
				T5M	8,573	3	0	2	122	9,236	3	0	2	132	9,353	3	0	2	134	4,924	3	0	1	72
				T5W	8,517	3	0	2	122	9,175	4	0	2	131	9,291	4	0	2	133	4,787	3	0	1	70
				BLC	6,770	1	0	2	97	7,293	1	0	2	104	7,386	1	0	2	106					
				LCCO	5,038	1	0	2	72	5,427	1	0	2	78	5,496	1	0	2	79					
				RCCO	5,038	1	0	2	72	5,427	1	0	2	78	5,496	1	0	2	79					
30	1050	P3	102W	T1S	11,661	2	0	2	114	12,562	3	0	3	123	12,721	3	0	3	125					
				T2S	11,648	2	0	2	114	12,548	3	0	3	123	12,707	3	0	3	125					
				T2M	11,708	2	0	2	115	12,613	2	0	2	124	12,773	2	0	2	125					
				T3S	11,339	2	0	2	111	12,215	3	0	3	120	12,370	3	0	3	121					
				T3M	11,680	2	0	2	115	12,582	2	0	2	123	12,742	2	0	2	125					
				T4M	11,426	2	0	3	112	12,309	2	0	3	121	12,465	2	0	3	122					
				TFTM	11,673	2	0	2	114	12,575	2	0	3	123	12,734	2	0	3	125					
				T5VS	12,140	3	0	1	119	13,078	3	0	1	128	13,244	3	0	1	130					
				T5S	12,150	3	0	1	119	13,089	3	0	1	128	13,254	3	0	1	130					
				T5M	12,119	4	0	2	119	13,056	4	0	2	128	13,221	4	0	2	130					
				T5W	12,040	4	0	3	118	12,970	4	0	3	127	13,134	4	0	3	129					
				BLC	9,570	1	0	2	94	10,310	1	0	2	101	10,440	1	0	2	102					
				LCCO	7,121	1	0	3	70	7,671	1	0	3	75	7,768	1	0	3	76					
				RCCO	7,121	1	0	3	70	7,671	1	0	3	75	7,768	1	0	3	76					
30	1250	P4	125W	T1S	13,435	3	0	3	107	14,473	3	0	3	116	14,657	3	0	3	117					
				T2S	13,421	3	0	3	107	14,458	3	0	3	116	14,641	3	0	3	117					
				T2M	13,490	2	0	2	108	14,532	3	0	3	116	14,716	3	0	3	118					
				T3S	13,064	3	0	3	105	14,074	3	0	3	113	14,252	3	0	3	114					
				T3M	13,457	2	0	2	108	14,497	2	0	2	116	14,681	2	0	2	117					
				T4M	13,165	2	0	3	105	14,182	2	0	3	113	14,362	2	0	3	115					
				TFTM	13,449	2	0	3	108	14,488	2	0	3	116	14,672	2	0	3	117					
				T5VS	13,987	4	0	1	112	15,068	4	0	1	121	15,259	4	0	1	122					
				T5S	13,999	3	0	1	112	15,080	3	0	1	121	15,271	3	0	1	122					
				T5M	13,963	4	0	2	112	15,042	4	0	2	120	15,233	4	0	2	122					
				T5W	13,872	4	0	3	111	14,944	4	0	3	120	15,133	4	0	3	121					
				BLC	11,027	1	0	2	88	11,879	1	0	2	95	12,029	1	0	2	96					
				LCCO	8,205	1	0	3	66	8,839	1	0	3	71	8,951	1	0	3	72					
				RCCO	8,205	1	0	3	66	8,839	1	0	3	71	8,951	1	0	3	72					
30	1400	P5	138W	T1S	14,679	3	0	3	106	15,814	3	0	3	115	16,014	3	0	3	116					
				T2S	14,664	3	0	3	106	15,797	3	0	3	114	15,997	3	0	3	116					
				T2M	14,739	3	0	3	107	15,878	3	0	3	115	16,079	3	0	3	117					
				T3S	14,274	3	0	3	103	15,377	3	0	3	111	15,572	3	0	3	113					
				T3M	14,704	2	0	3	107	15,840	3	0	3	115	16,040	3	0	3	116					
				T4M	14,384	2	0	3	104	15,496	3	0	3	112	15,692	3	0	3	114					
				TFTM	14,695	2	0	3	106	15,830	3	0	3	115	16,030	3	0	3	116					
				T5VS	15,283	4	0	1	111	16,464	4	0	1	119	16,672	4	0	1	121					
				T5S	15,295	3	0	1	111	16,477	4	0	1	119	16,686	4	0	1	121					
				T5M	15,257	4	0	2	111	16,435	4	0	2	119	16,644	4	0	2	121					
				T5W	15,157	4	0	3	110	16,328	4	0	3	118	16,534	4	0	3	120					
				BLC	12,048	1	0	2	87	12,979	1	0	2	94	13,143	1	0	2	95					
				LCCO	8,965	1	0	3	65	9,657	1	0	3	70	9,780	1	0	3	71					
					8,965	1	0	3	65	9,657	1	0	3	70	9,780	1	0	3	71					

© 2011-2018 Acuity Brands Lighting, Inc. All rights reserved.

Lumen Output

Lumen values are from photometric tests performed in accordance with IESNA LM-79-08. Data is considered to be representative of the configurations shown, within the tolerances allowed by Lighting Facts. Contact factory for performance data on any configurations not shown here.

Forward Optics

LED Count	Drive Current	Power Package	System Watts	Dist. Type	30K (3000 K, 70 CRI)					40K (4000 K, 70 CRI)					50K (5000 K, 70 CRI)					AMBPC (Amber Phosphor Converted)				
					Lumens	B	U	G	LPW	Lumens	B	U	G	LPW	Lumens	B	U	G	LPW	Lu-mens	B	U	G	LPW
40	1250	**P6**	163W	T1S	17,654	3	0	3	108	19,018	3	0	3	117	19,259	3	0	3	118					
				T2S	17,635	3	0	3	108	18,998	3	0	3	117	19,238	3	0	3	118					
				T2M	17,726	3	0	3	109	19,096	3	0	3	117	19,337	3	0	3	119					
				T3S	17,167	3	0	3	105	18,493	3	0	3	113	18,727	3	0	3	115					
				T3M	17,683	3	0	3	108	19,049	3	0	3	117	19,290	3	0	3	118					
				T4M	17,299	3	0	3	106	18,635	3	0	4	114	18,871	3	0	4	116					
				TFTM	17,672	3	0	3	108	19,038	3	0	4	117	19,279	3	0	4	118					
				T5VS	18,379	4	0	1	113	19,800	4	0	1	121	20,050	4	0	1	123					
				T5S	18,394	4	0	2	113	19,816	4	0	2	122	20,066	4	0	2	123					
				T5M	18,348	4	0	2	113	19,766	4	0	2	121	20,016	4	0	2	123					
				T5W	18,228	5	0	3	112	19,636	5	0	3	120	19,885	5	0	3	122					
				BLC	14,489	2	0	2	89	15,609	2	0	3	96	15,806	2	0	3	97					
				LCCO	10,781	1	0	3	66	11,614	1	0	3	71	11,761	2	0	3	72					
				RCCO	10,781	1	0	3	66	11,614	1	0	3	71	11,761	2	0	3	72					
40	1400	**P7**	183W	T1S	19,227	3	0	3	105	20,712	3	0	3	113	20,975	3	0	3	115					
				T2S	19,206	3	0	3	105	20,690	3	0	3	113	20,952	3	0	3	114					
				T2M	19,305	3	0	3	105	20,797	3	0	3	114	21,060	3	0	3	115					
				T3S	18,696	3	0	3	102	20,141	3	0	3	110	20,396	3	0	4	111					
				T3M	19,258	3	0	3	105	20,746	3	0	3	113	21,009	3	0	3	115					
				T4M	18,840	3	0	4	103	20,296	3	0	4	111	20,553	3	0	4	112					
				TFTM	19,246	3	0	4	105	20,734	3	0	4	113	20,996	3	0	4	115					
				T5VS	20,017	4	0	1	109	21,564	4	0	1	118	21,837	4	0	1	119					
				T5S	20,033	4	0	2	109	21,581	4	0	2	118	21,854	4	0	2	119					
				T5M	19,983	4	0	2	109	21,527	5	0	3	118	21,799	5	0	3	119					
				T5W	19,852	5	0	3	108	21,386	5	0	3	117	21,656	5	0	3	118					
				BLC	15,780	2	0	3	86	16,999	2	0	3	93	17,214	2	0	3	94					
				LCCO	11,742	2	0	3	64	12,649	2	0	3	69	12,809	2	0	3	70					
				RCCO	11,742	2	0	3	64	12,649	2	0	3	69	12,809	2	0	3	70					
60	1050	**P8**	207W	T1S	22,490	3	0	3	109	24,228	3	0	3	117	24,535	3	0	3	119					
				T2S	22,466	3	0	4	109	24,202	3	0	4	117	24,509	3	0	4	118					
				T2M	22,582	3	0	3	109	24,327	3	0	3	118	24,635	3	0	3	119					
				T3S	21,870	3	0	4	106	23,560	3	0	4	114	23,858	3	0	4	115					
				T3M	22,527	3	0	4	109	24,268	3	0	4	117	24,575	3	0	4	119					
				T4M	22,038	3	0	4	106	23,741	3	0	4	115	24,041	3	0	4	116					
				TFTM	22,513	3	0	4	109	24,253	3	0	4	117	24,560	3	0	4	119					
				T5VS	23,415	5	0	1	113	25,224	5	0	1	122	25,543	5	0	1	123					
				T5S	23,434	4	0	2	113	25,244	4	0	2	122	25,564	4	0	2	123					
				T5M	23,374	5	0	3	113	25,181	5	0	3	122	25,499	5	0	3	123					
				T5W	23,221	5	0	4	112	25,016	5	0	4	121	25,332	5	0	4	122					
				BLC	18,458	2	0	3	89	19,885	2	0	3	96	20,136	2	0	3	97					
				LCCO	13,735	2	0	3	66	14,796	2	0	4	71	14,983	2	0	4	72					
				RCCO	13,735	2	0	3	66	14,796	2	0	4	71	14,983	2	0	4	72					
60	1250	**P9**	241W	T1S	25,575	3	0	3	106	27,551	3	0	3	114	27,900	3	0	3	116					
				T2S	25,548	3	0	4	106	27,522	3	0	4	114	27,871	3	0	4	116					
				T2M	25,680	3	0	3	107	27,664	3	0	3	115	28,014	3	0	3	116					
				T3S	24,870	3	0	4	103	26,791	3	0	4	111	27,130	3	0	4	113					
				T3M	25,617	3	0	4	106	27,597	3	0	4	115	27,946	3	0	4	116					
				T4M	25,061	3	0	4	104	26,997	3	0	4	112	27,339	3	0	4	113					
				TFTM	25,602	3	0	4	106	27,580	3	0	4	114	27,929	3	0	4	116					
				T5VS	26,626	5	0	1	110	28,684	5	0	1	119	29,047	5	0	1	121					
				T5S	26,648	4	0	2	111	28,707	5	0	2	119	29,070	5	0	2	121					
				T5M	26,581	5	0	3	110	28,635	5	0	3	119	28,997	5	0	3	120					
				T5W	26,406	5	0	4	110	28,447	5	0	4	118	28,807	5	0	4	120					
				BLC	20,990	2	0	3	87	22,612	2	0	3	94	22,898	2	0	3	95					
				LCCO	15,619	2	0	4	65	16,825	2	0	4	70	17,038	2	0	4	71					
					15,619	2	0	4	65	16,825	2	0	4	70	17,038	2	0	4	71					

© 2011-2018 Acuity Brands Lighting, Inc. All rights reserved.

Lumen Output

Lumen values are from photometric tests performed in accordance with IESNA LM-79-08. Data is considered to be representative of the configurations shown, within the tolerances allowed by Lighting Facts. Contact factory for performance data on any configurations not shown here.

Rotated Optics

LED Count	Drive Current	Power Package	System Watts	Dist. Type	30K (3000 K, 70 CRI)					40K (4000 K, 70 CRI)					50K (5000 K, 70 CRI)					AMBPC (Amber Phosphor Converted)				
					Lumens	B	U	G	LPW	Lumens	B	U	G	LPW	Lumens	B	U	G	LPW	Lumens	B	U	G	LPW
60	530	**P10**	106W	T1S	13,042	3	0	3	123	14,050	3	0	3	133	14,228	3	0	3	134	7,167	2	0	2	72
				T2S	12,967	4	0	4	122	13,969	4	0	4	132	14,146	4	0	4	133	7,507	2	0	2	76
				T2M	13,201	3	0	3	125	14,221	3	0	3	134	14,401	3	0	3	136	7,263	2	0	2	73
				T3S	12,766	4	0	4	120	13,752	4	0	4	130	13,926	4	0	4	131	7,424	2	0	2	75
				T3M	13,193	4	0	4	124	14,213	4	0	4	134	14,393	4	0	4	136	7,387	2	0	2	75
				T4M	12,944	4	0	4	122	13,945	4	0	4	132	14,121	4	0	4	133	7,400	2	0	2	75
				TFTM	13,279	4	0	4	125	14,305	4	0	4	135	14,486	4	0	4	137	7,288	1	0	2	74
				T5VS	13,372	3	0	1	126	14,405	4	0	1	136	14,588	4	0	1	138	7,734	3	0	1	78
				T5S	13,260	3	0	1	125	14,284	3	0	1	135	14,465	3	0	1	136	7,641	3	0	0	77
				T5M	13,256	4	0	2	125	14,281	4	0	2	135	14,462	4	0	2	136	7,737	3	0	2	78
				T5W	13,137	4	0	3	124	14,153	4	0	3	134	14,332	4	0	3	135	7,522	3	0	2	76
				BLC	10,906	3	0	3	103	11,749	3	0	3	111	11,898	3	0	3	112					
				LCCO	7,789	1	0	3	73	8,391	1	0	3	79	8,497	1	0	3	80					
				RCCO	7,779	4	0	4	73	8,380	4	0	4	79	8,486	4	0	4	80					
60	700	**P11**	137W	T1S	16,556	3	0	3	121	17,835	3	0	3	130	18,061	4	0	4	132	8,952	2	0	2	68
				T2S	16,461	4	0	4	120	17,733	4	0	4	129	17,957	4	0	4	131	9,377	2	0	2	72
				T2M	16,758	4	0	4	122	18,053	4	0	4	132	18,281	4	0	4	133	9,072	2	0	2	69
				T3S	16,205	4	0	4	118	17,457	4	0	4	127	17,678	4	0	4	129	9,273	2	0	2	71
				T3M	16,748	4	0	4	122	18,042	4	0	4	132	18,271	4	0	4	133	9,227	2	0	2	70
				T4M	16,432	4	0	4	120	17,702	4	0	4	129	17,926	4	0	4	131	9,243	2	0	2	71
				TFTM	16,857	4	0	4	123	18,159	4	0	4	133	18,389	4	0	4	134	9,103	2	0	2	69
				T5VS	16,975	4	0	1	124	18,287	4	0	1	133	18,518	4	0	1	135	9,661	3	0	1	74
				T5S	16,832	4	0	1	123	18,133	4	0	2	132	18,362	4	0	2	134	9,544	3	0	1	73
				T5M	16,828	4	0	2	123	18,128	4	0	2	132	18,358	4	0	2	134	9,665	3	0	2	74
				T5W	16,677	4	0	3	122	17,966	5	0	3	131	18,193	5	0	3	133	9,395	4	0	2	72
				BLC	13,845	3	0	3	101	14,915	3	0	3	109	15,103	3	0	3	110					
				LCCO	9,888	1	0	3	72	10,652	2	0	3	78	10,787	2	0	3	79					
				RCCO	9,875	4	0	4	72	10,638	4	0	4	78	10,773	4	0	4	79					
60	1050	**P12**	207W	T1S	22,996	4	0	4	111	24,773	4	0	4	120	25,087	4	0	4	121					
				T2S	22,864	4	0	4	110	24,631	5	0	5	119	24,943	5	0	5	120					
				T2M	23,277	4	0	4	112	25,075	4	0	4	121	25,393	4	0	4	123					
				T3S	22,509	4	0	4	109	24,248	5	0	5	117	24,555	5	0	5	119					
				T3M	23,263	4	0	4	112	25,061	4	0	4	121	25,378	4	0	4	123					
				T4M	22,824	5	0	5	110	24,588	5	0	5	119	24,899	5	0	5	120					
				TFTM	23,414	5	0	5	113	25,223	5	0	5	122	25,543	5	0	5	123					
				T5VS	23,579	5	0	1	114	25,401	5	0	1	123	25,722	5	0	1	124					
				T5S	23,380	4	0	2	113	25,187	4	0	2	122	25,506	4	0	2	123					
				T5M	23,374	5	0	3	113	25,181	5	0	3	122	25,499	5	0	3	123					
				T5W	23,165	5	0	4	112	24,955	5	0	4	121	25,271	5	0	4	122					
				BLC	19,231	4	0	4	93	20,717	4	0	4	100	20,979	4	0	4	101					
				LCCO	13,734	2	0	3	66	14,796	2	0	4	71	14,983	2	0	4	72					
				RCCO	13,716	4	0	4	66	14,776	4	0	4	71	14,963	4	0	4	72					
60	1250	**P13**	231W	T1S	25,400	4	0	4	110	27,363	4	0	4	118	27,709	4	0	4	120					
				T2S	25,254	5	0	5	109	27,205	5	0	5	118	27,550	5	0	5	119					
				T2M	25,710	4	0	4	111	27,696	4	0	4	120	28,047	4	0	4	121					
				T3S	24,862	5	0	5	108	26,783	5	0	5	116	27,122	5	0	5	117					
				T3M	25,695	5	0	5	111	27,680	5	0	5	120	28,031	5	0	5	121					
				T4M	25,210	5	0	5	109	27,158	5	0	5	118	27,502	5	0	5	119					
				TFTM	25,861	5	0	5	112	27,860	5	0	5	121	28,212	5	0	5	122					
				T5VS	26,043	5	0	1	113	28,056	5	0	1	121	28,411	5	0	1	123					
				T5S	25,824	4	0	2	112	27,819	5	0	2	120	28,172	5	0	2	122					
				T5M	25,818	5	0	3	112	27,813	5	0	3	120	28,165	5	0	3	122					
				T5W	25,586	5	0	4	111	27,563	5	0	4	119	27,912	5	0	4	121					
				BLC	21,241	4	0	4	92	22,882	4	0	4	99	23,172	4	0	4	100					
				LCCO	15,170	2	0	4	66	16,342	2	0	4	71	16,549	2	0	4	72					
					15,150	5	0	5	66	16,321	5	0	5	71	16,527	5	0	5	72					

© 2011-2018 Acuity Brands Lighting, Inc. All rights reserved.

FEATURES & SPECIFICATIONS

INTENDED USE
The sleek design of the D-Series Size 1 reflects the embedded high performance LED technology. It is ideal for many commercial and municipal applications, such as parking lots, plazas, campuses, and streetscapes.

CONSTRUCTION
Single-piece die-cast aluminum housing has integral heat sink fins to optimize thermal management through conductive and convective cooling. Modular design allows for ease of maintenance and future light engine upgrades. The LED drivers are mounted in direct contact with the casting to promote low operating temperature and long life. Housing is completely sealed against moisture and environmental contaminants (IP65). Low EPA (1.01 ft^2) for optimized pole wind loading.

FINISH
Exterior parts are protected by a zinc-infused Super Durable TGIC thermoset powder coat finish that provides superior resistance to corrosion and weathering. A tightly controlled multi-stage process ensures a minimum 3 mils thickness for a finish that can withstand extreme climate changes without cracking or peeling. Available in both textured and non-textured finishes.

OPTICS
Precision-molded proprietary acrylic lenses are engineered for superior area lighting distribution, uniformity, and pole spacing. Light engines are available in standard 3000 K, 4000 K and 5000 K (70 CRI) configurations. The D-Series Size 1 has zero uplight and qualifies as a Nighttime Friendly™ product, meaning it is consistent with the LEED® and Green Globes™ criteria for eliminating wasteful uplight.

ELECTRICAL
Light engine configurations consist of high-efficacy LEDs mounted to metal-core circuit boards to maximize heat dissipation and promote long life (up to L85/100,000 hours at 25°C). Class 1 electronic drivers are designed to have a power factor >90%, THD <20%, and an expected life of 100,000 hours with <1% failure rate. Easily serviceable 10kV surge protection device meets a minimum Category C Low operation (per ANSI/IEEE C62.41.2).

INSTALLATION
Included mounting block and integral arm facilitate quick and easy installation. Stainless steel bolts fasten the mounting block securely to poles and walls, enabling the D-Series Size 1 to withstand up to a 3.0 G vibration load rating per ANSI C136.31. The D-Series Size 1 utilizes the AERIS™ series pole drilling pattern (template #8). Optional terminal block and NEMA photocontrol receptacle are also available.

LISTINGS
UL Listed for wet locations. Light engines are IP66 rated; luminaire is IP65 rated. Rated for -40°C minimum ambient. U.S. Patent No. D672,492 S. International patent pending.

DesignLights Consortium® (DLC) Premium qualified product and DLC qualified product. Not all versions of this product may be DLC Premium qualified or DLC qualified. Please check the DLC Qualified Products List at www.designlights.org/QPL to confirm which versions are qualified.

International Dark-Sky Association (IDA) Fixture Seal of Approval (FSA) is available for all products on this page utilizing 3000K color temperature only.

WARRANTY
5-year limited warranty. Complete warranty terms located at:
www.acuitybrands.com/CustomerResources/Terms_and_conditions.aspx

Note: Actual performance may differ as a result of end-user environment and application. All values are design or typical values, measured under laboratory conditions at 25 °C. Specifications subject to change without notice.

© 2011-2018 Acuity Brands Lighting, Inc. All rights reserved.

LED AREA LIGHTS - LSI SLICE LARGE (XLCL)

US patent D726,947 7,828,456 8,002,428 8,177,386 8,434,893 8,567,983 and US & Int'l. patents pending

LIGHT OUTPUT - XLCL

		Lumens (Nominal) Type 3	Type FT	Type 5	FTA	Watts (Nominal)
Cool White	SS	45,800	49,500	50,700	51,300	435
	HO	53,400	57,300	59,200	59,100	542
Neutral White	SS	45,600	48,600	49,600	50,400	435
	HO	52,800	56,300	57,600	57,700	542

LED Chips are frequently updated therefore values may increase.

SMARTTEC™ - LSI drivers feature integral sensor which reduces drive current, when ambient temperatures exceed rated temperature.

ENERGY SAVING CONTROL OPTION - DIM - 0-10 volt dimming enabled. Availabl with integrated LSI Controls wireless modules.

LEDS - Select high-brightness LEDs in Cool White (5000K), or Neutral White (4000K) color temperature, 70 CRI.

DISTRIBUTION/PERFORMANCE - Types 3, 5, FT, FT-L, FT-R and FTA available. Type FTA available for single automotive front row design. FT-L and FT-R allow for D180 mounting configurations with factory set optics for applications such automotive front row. Exceptional uniformity creates bright environment at lower light levels.

HOUSING - One-piece, die-formed aluminum housing contains factory prewired driver in a gasketed, weather-resistant wiring compartment. Hinged wiring access door (with safety lanyard) located underneath. Fixture is IP65 rated.

OPTICAL UNIT - Clear tempered optical-grade flat glass lens permanently sealed to weather-tight aluminum optic frame (includes pressure-stabilizing breather).

MOUNTING - Tapered rear design allows fixtures to be mounted in 90° and 120° configurations. Use with 5" traditional drilling pattern. A round pole plate (RPP2) is required for mounting to round poles. Wall mount available by ordering wall mounting bracket (BKS-BO-WM-*-CLR). Mast Arm mounting available by ordering BKA-NM-MA-5-XLCL-CLR adaptor (for 2" pipe). See Accessories for all brackets.

ELECTRICAL - Two-stage surge protection (including separate surge protection built into electronic driver) meets IEEE C62.41.2-2002, Location Category C. Available with universal voltage power supply 120-277VAC (50/60Hz input) and 347-480 VAC. Optional twistlock photocell receptacle is available. Photocell must be ordered separately.

DRIVER - Available in SS (Super Saver) and HO (High Output) drive currents. Components are fully encased in potting material for moisture resistance. Driver complies with FCC standards. Driver and key electronic components can be easily accessed.

OPERATING TEMPERATURE - -40°C to +50°C (-40°F to +122°F)

FINISH - Fixtures are finished with LSI's DuraGrip® polyester powder coat finishing process. The DuraGrip finish withstands extreme weather changes without cracking or peeling. Available in black, bronze and white. Other standard LSI finishes available. Consult factory.

WARRANTY - LSI LED fixtures carry a limited 5-year warranty.

PHOTOMETRICS - Please visit our web site at www.lsi-industries.com for detailed photometric data.

SHIPPING WEIGHT (in carton) - 55 lbs./24.9Kg

LISTING - UL listed to US and international safety standards. Suitable for wet locations.

This product, or selected versions of this product, meet the standards listed below. Please consult factory for your specific requirements.

ARRA Funding Compliant · DLC · c UL us LISTED wet location · RoHS COMPLIANT · CE · FC · IP65

Fixtures comply with ANSI C136.31-2010 American National Standard for Roadway Lighting Equipment - Luminaire Vibration 1.5G requirements.

Project Name _____ **Fixture Type** _____

Catalog # _____

03/17/17

© 2017
LSI INDUSTRIES INC.

LED AREA LIGHTS - LSI SLICE LARGE (XLCL)

LUMINAIRE ORDERING INFORMATION

TYPICAL ORDER EXAMPLE: **XLCL FT LED HO CW UE WHT PCR**

Prefix	Distribution	Light Source	Drive Current	Color Temperature	Input Voltage	Finish	Optional Controls	Options
XLCL	3 - Type III 5 - Type V FT - Forward Throw FT-L - Forward Optic Rotated for D180 Mount (Left Side) FT-R - Forward Optic Rotated for D180 Mount (Right Side) FTA – Forward Throw Automotive	LED	SS - Super Saver HO -High Output	CW - Cool White (5000K) NW - Neutral White (4000K)	UE - Universal Voltage (120-277V) 347-480 Universal Voltage (347-480V)	BLK - Black BRZ - Bronze WHT - White	Wireless Controls System [5] PCM - Platinum Control System PCMH - Host/Satelite Platinum Control System GCM - Gold Control System GCMH - Host/Satelite Gold Control System	DIM - 0-10V Dimming (from External Signal) PCR - Photoelectric Control Receptacle[1]

LUMINAIRE EPA CHART - XLCL

Single	.7
D180°	1.4
D90°	1.1
T90°	2.3
TN120°	2.3
Q90°	2.6

Note: House Side Shield adds to fixture EPA. Consult Factory.

ACCESSORY ORDERING INFORMATION

(Accessories are field installed)

Description	Order Number	Description	Order Number
BKS-BO-WM-*-CLR Wall Mount Plate	123111CLR	PC208-277 Photocell for use with PCR option (208V, 240V, 277V))	122515[3]
XLCL-3/FT-HSS RM - External House Side Shield (Black only - rear mounted)	610098BLK[2]	PC347 Photocell for use with PCR option (347V)	159516[3]
XLCL-FT-L/FT-R-HSS SM - External House Side Shield (Black only - side mounted)	610100BLK[2]	PC480 Photocell for use with PCR option (480V)	225180[3]
BKA-NM-MA-5-XLCL-CLR Mast Arm Adaptor	617865 CLR	FK120 - Single Fusing (120V)	FK120[4]
RPP2 - Round Pole Plate	162914CLR	FK277 - Single Fusing (277V)	FK277[4]
PC120 Photocell for use with PCR option (120V)	122514[3]	DFK208,240 - Double Fusing (208V, 240V)	DFK208,240[4]
		DFK480 Double Fusing (480V)	DFK480[4]
		FK347 Single Fusing (347V)	FK347[4]

FOOTNOTES:

1- Photocell must be ordered separately. See Accessories.

2- House Side Shields add to fixture EPA. Consult factory.

3- Factory installed PCR option required. See Options.

4- Fusing must be located in hand hole of pole.

5- For wireless controls information and accessories, see Controls Section.

DIMENSIONS

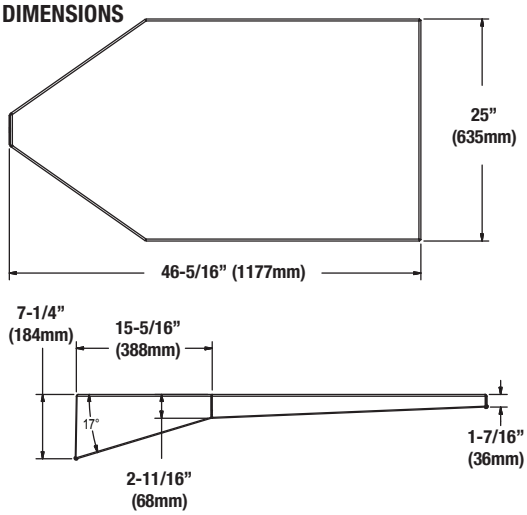

House Side Sheilds

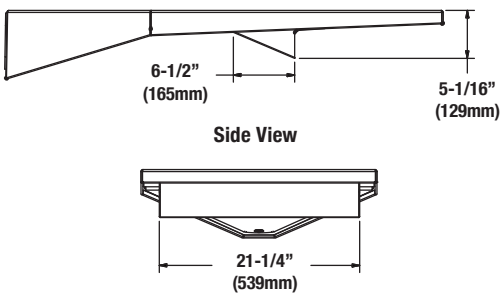

Rear Mount (610098BLK)

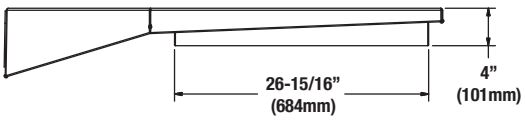

Side Mount (610100BLK)

LEFT AND RIGHT VERSIONS OF TYPE FT REFLECTORS (TOP VIEW)

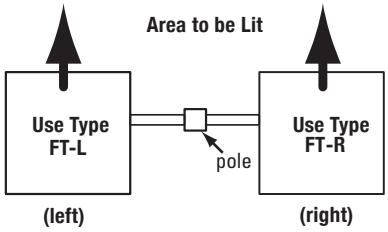

Note: Optics are not field-rotatable. For D180 Forward Throw installations specify left (FT-L) and/or right (FT-R) side mounting. Orientation is based on standing at the pole and looking out at the area to be lit.

Project Name _____ **Fixture Type** _____

Catalog # _____

03/17/17

© 2017
LSI INDUSTRIES INC.

LED AREA LIGHTS - LSI SLICE LARGE (XLCL)

BUG LISTING

XLCL - Type 3

Drive Current	Color Temp.*	Lumens	Watts	LER	BUG Rating
HO	CW	53,365	545	98	B5-U0-G4
	CW-HSS	36,015	543	66	B4-U0-G4
	NW	52,840	544	97	B5-U0-G4
	NW-HSS	35,358	543	65	B4-U0-G4
SS	CW	45,829	424	108	B5-U0-G4
	CW-HSS	31,300	427	73	B4-U0-G3
	NW	45,570	428	106	B5-U0-G4
	NW-HSS	30,512	429	71	B4-U0-G3

XLCL - Type FT-L

Drive Current	Color Temp.*	Lumens	Watts	LER	BUG Rating
HO	CW	58,144	545	107	B5-U0-G5
	CW-HSS	48,083	547	88	B5-U0-G5
	NW	57,001	544	105	B5-U0-G5
	NW-HSS	45,910	544	84	B5-U0-G5
SS	CW	49,913	435	115	B5-U0-G5
	CW-HSS	41,457	428	97	B5-U0-G5
	NW	48,751	434	112	B5-U0-G5
	NW-HSS	39,767	423	94	B5-U0-G5

XLCL - Type 5

Drive Current	Color Temp.*	Lumens	Watts	LER	BUG Rating
HO	CW	59,153	547	108	B5-U0-G4
	CW-HSS	36,076	544	66	B4-U0-G4
	NW	57,636	545	106	B5-U0-G4
	NW-HSS	35,681	544	66	B4-U0-G4
SS	CW	50,680	434	117	B5-U0-G4
	CW-HSS	31,200	427	73	B4-U0-G4
	NW	49,629	434	114	B5-U0-G4
	NW-HSS	29,657	422	70	B4-U0-G4

XLCL - Type FT-R

Drive Current	Color Temp.*	Lumens	Watts	LER	BUG Rating
HO	CW	58,144	545	107	B5-U0-G5
	CW-HSS	48,083	547	88	B5-U0-G5
	NW	57,001	544	105	B5-U0-G5
	NW-HSS	45,910	544	84	B5-U0-G5
SS	CW	49,913	435	115	B5-U0-G5
	CW-HSS	41,457	428	97	B5-U0-G5
	NW	48,751	434	112	B5-U0-G5
	NW-HSS	39,768	423	94	B5-U0-G5

* Color Temperature: NW-4000K, CW-5000K

XLCL - Type FTA

Drive Current	Color Temp.*	Lumens	Watts	LER	BUG Rating
HO	CW	59061	533	111	B4-U0-G3
	CW-HSS	55,330	533	104	B4-U0-G3
	NW	57,718	533	108	B4-U0-G3
	NW-HSS	54,094	533	102	B4-U0-G3
SS	CW	51,332	429	120	B4-U0-G3
	CW-HSS	48,395	429	113	B4-U0-G3
	NW	50,417	429	117	B4-U0-G3
	NW-HSS	47,071	429	110	B4-U0-G2

XLCL - Type FT

Drive Current	Color Temp.*	Lumens	Watts	LER	BUG Rating
HO	CW	57,320	545	105	B4-U0-G5
	CW-HSS	41,895	544	77	B3-U0-G5
	NW	56,282	546	103	B4-U0-G5
	NW-HSS	41,730	544	77	B3-U0-G5
SS	CW	49,499	437	113	B4-U0-G5
	CW-HSS	37,097	427	87	B3-U0-G4
	NW	48,586	437	111	B4-U0-G5
	NW-HSS	35,457	425	83	B3-U0-G4

© 2017
LSI INDUSTRIES INC.

LED SURFACE MOUNT - LEGACY™ (CRUS SM)

US & Int'l. patents pending.

HOUSING - One-piece, die-formed, aluminum housing with powder coated finish. One conduit knockout and four mounting holes. 2x2 housing is formed from zinc-coated steel.

LEDS - Features an array of select, mid-power, high brightness, high efficiency LED chips; 5000K color temperature, 70 CRI.

DRIVE CURRENT - Choice of Very Low Wattage (VLW), Low Wattage (LW), Super Saver (SS), High Output (HO) or Very High Output (VHO).

OPTICS / DISTRIBUTION - Symmetrical, which directs light through a glass lens to provide a uniform distribution of light to vertical and horizontal surfaces.

OPTICAL UNIT - Features an ultra-slim 7/8" profile die cast housing, with a standard flat clear or diffused glass lens. Unit is water-resistant, sealed to an IP67 rating. Integral designed heat sink does not trap dirt and grime, ensuring cool running performance over the life of the fixture.

PRESSURE STABILIZING VENT - Luminaire assembly incorporates a pressure stabilizing vent breather to prevent seal fatigue and failure.

DRIVER- State-of-the-art driver technology superior energy-efficiency and optimum light output. Driver components are fully encased in potting for moisture resistance. Complies with IEC and FCC standards. 0-10 V dimming supplied standard with all drive currents.

ADAPTOR PANEL - Die formed galvanized steel, with powder coat finish.

OPERATING TEMPERATURE - -40°C to 50°C (-40°F to +122°F)

ELECTRICAL - Universal voltage power supply, 120-277 VAC, 50/60 HZ input. Drivers feature two-stage surge protection (including separate surge protection built into electronic driver) meets IEEE C62.41.2-2002, Scenario 1, Location Category C.

FINISH - Standard color is white and is finished with LSI's DuraGrip polyester powder coat process. DuraGrip withstands extreme weather changes without cracking or peeling.

INSTALLATION - Pre-assembled optical unit and mounting panel attaches to fixture housing via 4 fasteners. Driver is pre-mounted to back of optical assembly.

SHIPPING WEIGHT - 35 pounds.

EXPECTED LIFE - Minimum 60,000 to 100,000 hours depending upon the ambient temperature of the installation location. See LSI web site for specific guidance.

WARRANTY - Limited 5-year warranty.

PHOTOMETRICS - Applications layouts are available upon request. Contact LSI Petroleum Lighting or petroleum.apps@lsi-industries.com

LISTING - UL listed to UL 1598, UL 8750 and other U.S. and International safety standards. Suitable for wet locations. For a list of the specific products in this series that are DLC listed, please consult the LED Lighting section of our website or the Design Lights website at www.designlights.org.

This product, or selected versions of this product, meet the standards listed below. Please consult factory for your specific requirements.

Intertek wet location

RoHS COMPLIANT

IP67

Project Name _____ **Fixture Type** _____

Catalog # _____

6/6/17

© 2017
LSI INDUSTRIES INC.

LED SURFACE MOUNT - LEGACY™ (CRUS SM)

LUMINAIRE ORDERING INFORMATION

TYPICAL ORDER EXAMPLE: **CRUS SM SC LED VHO 50 UE WHT**

Prefix	Distribution	Light Source	Drive Current	Color Temperature	Input Voltage	Finish	Options
CRUS SM (Surface Mount)	SC - Standard Symmetric	LED	VLW - Very Low Watt LW - Low Watt SS - Super Saver HO - High Output VHO - Very High Output	50 - 5000K	UE - Universal Voltage (120-277V) 347-480 Volt	WHT - White BRZ - Bronze BLK - Black	DFL - Diffused Lens

ACCESSORY ORDERING INFORMATION

Description	Order Number
SSA Slope Surface Adaptor	52152 CLR
2x2 Shallow Housing Only	545376
10' Toggle Cable Hanger	TCH10

DIMENSIONS

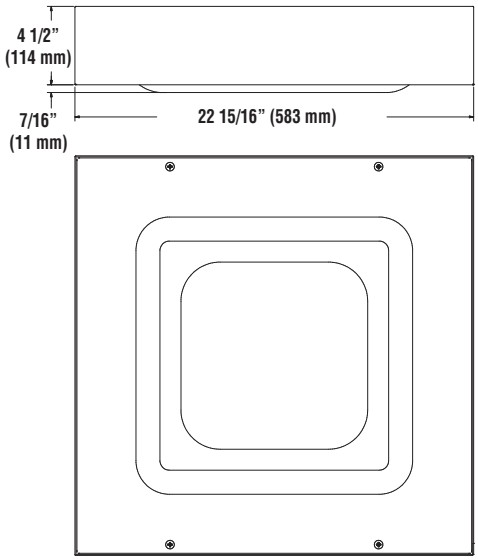

SLOPE SURFACE ADAPTOR – SSA ACCESSORY

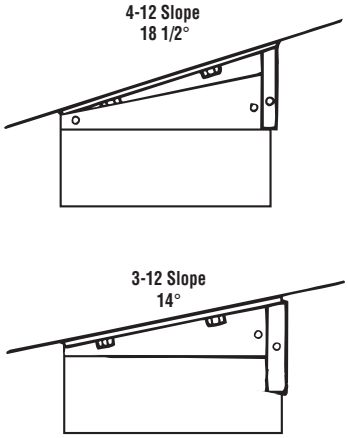

TOGGLE CABLE HANGER

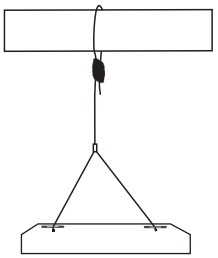

LIGHT OUTPUT - CRUS SM

		Lumens		Watts	LPW	
		SC	AC	SC/AC	SC	AC
Cool White	VLW - Very Low Watt	9055	7632	61	148	125
	LW - Low Watt	10525	8884	74	142	120
	SS - Super Saver	13674	11595	98	140	118
	HO - High Output	18633	15145	132	141	115
	VHO - Very High Output	22418	17262	159	141	109

Project Name _____ Fixture Type _____

Catalog # _____

6/6/17

© 2017
LSI INDUSTRIES INC.

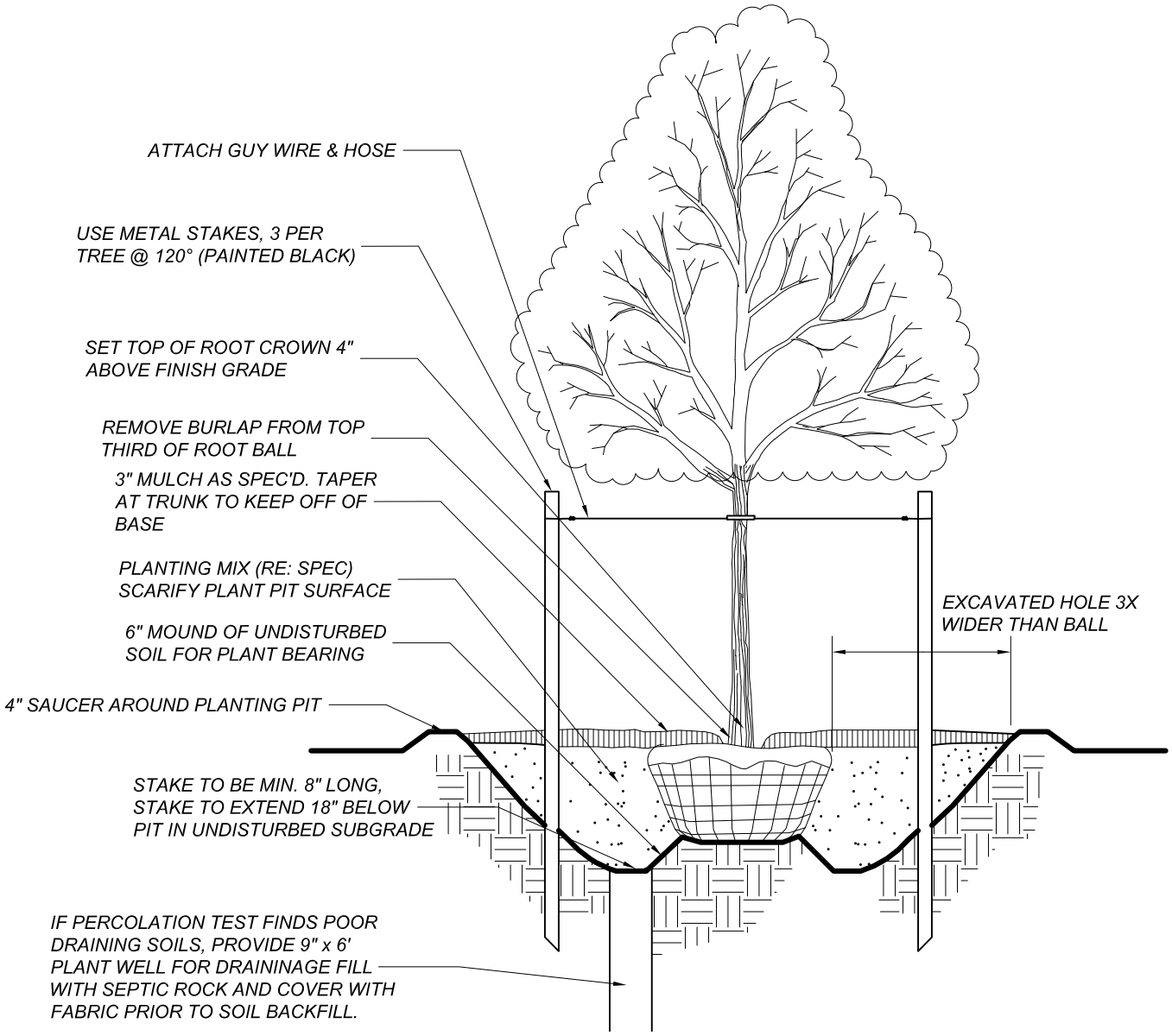

TYPICAL LANDSCAPING DETAIL

TREE PLANTING

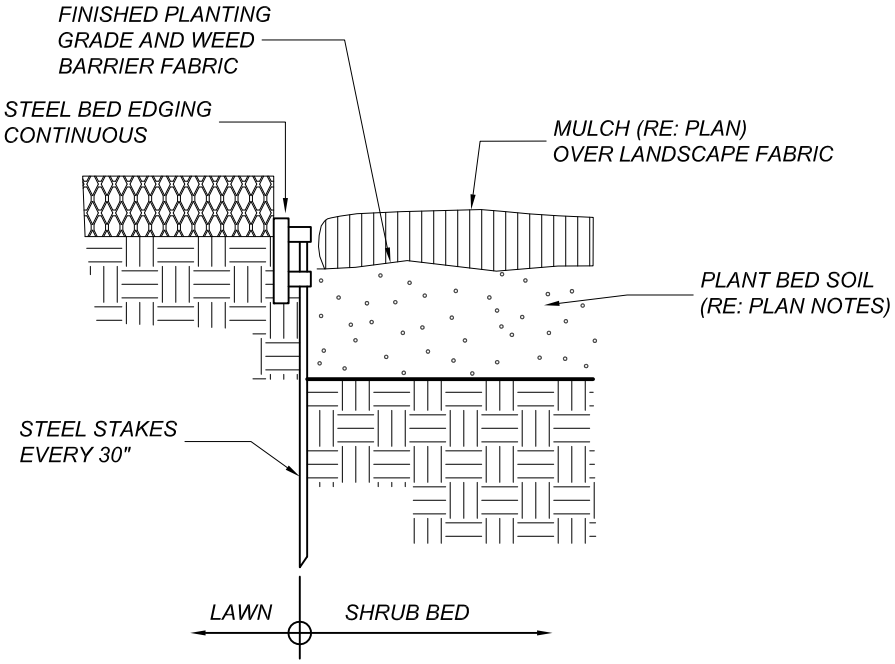

TYPICAL LANDSCAPING DETAIL

STEEL BED EDGING

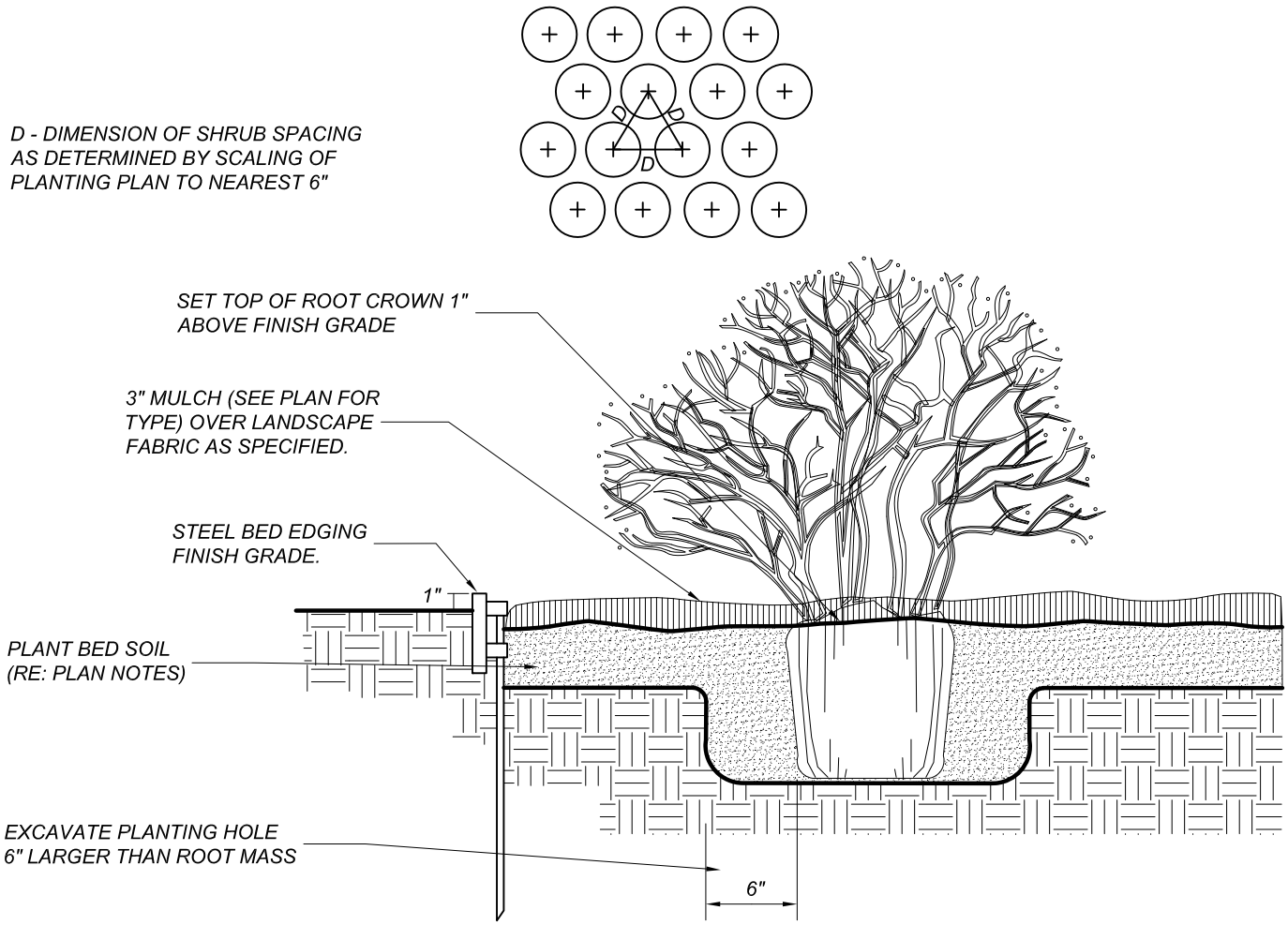

TYPICAL LANDSCAPING DETAIL

SHRUB PLANTING

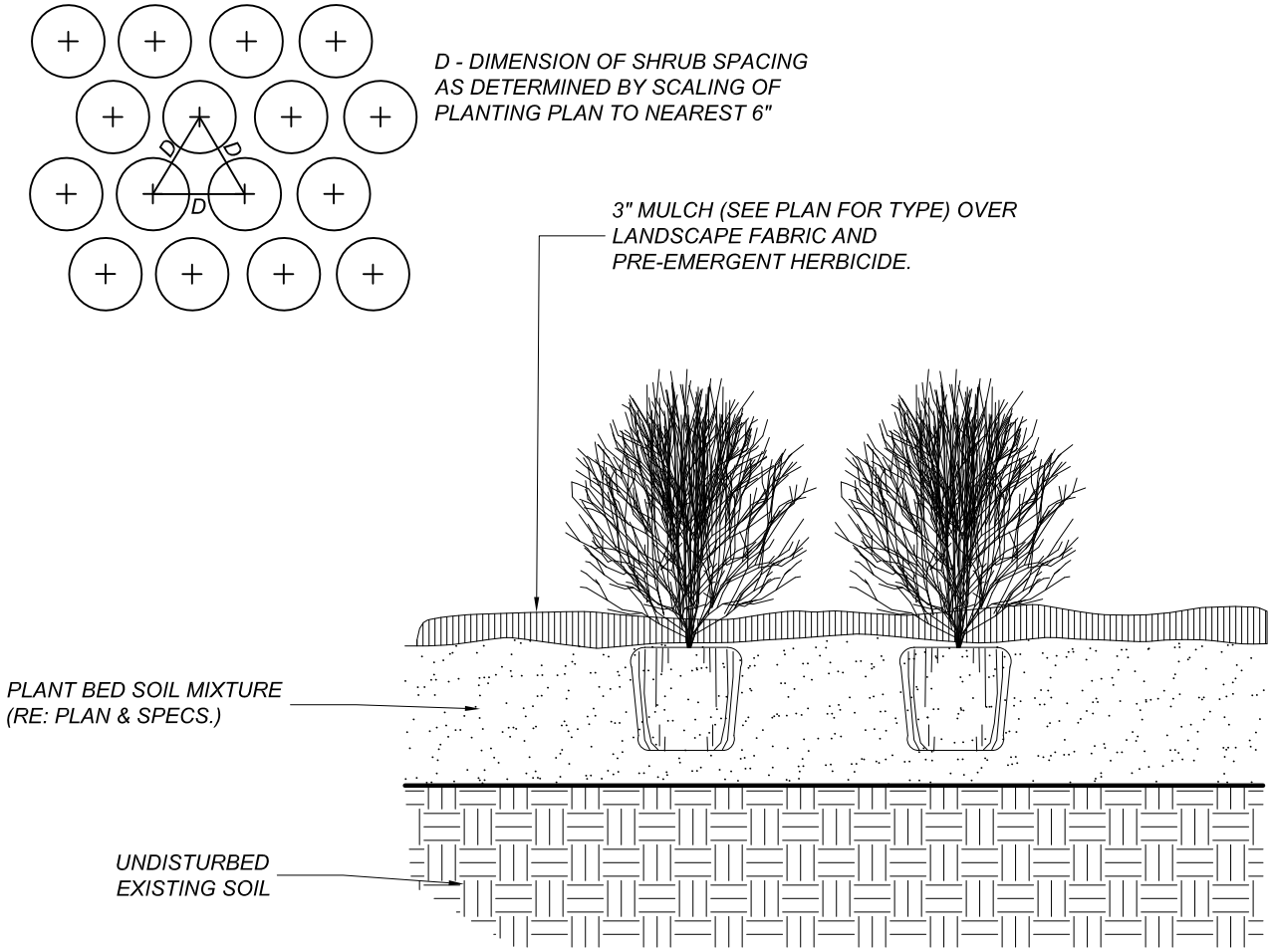

TYPICAL LANDSCAPING DETAIL

PERENNIAL PLANTING

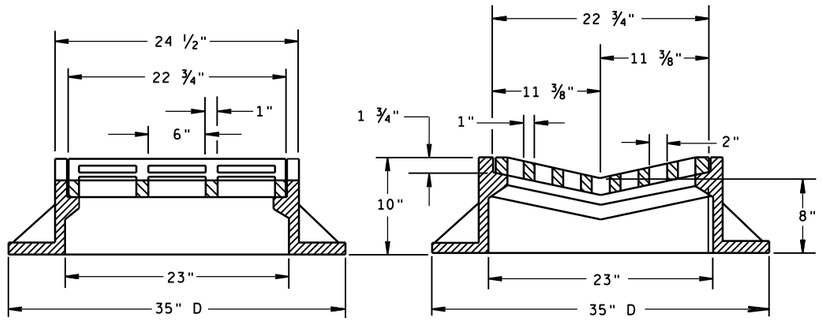

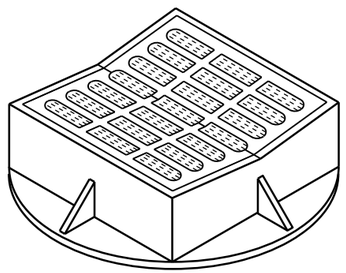

TYPE "B"

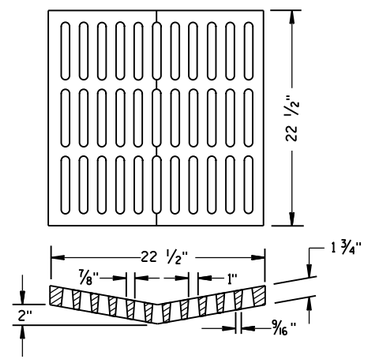

ALTERNATIVE GRATE FOR TYPE "B" COVER

USE WHERE PEDESTRIAN OR BICYCLE TRAFFIC IS POSSIBLE.

NOTED AS TYPE B-A ON THE DRAINAGE TABLE

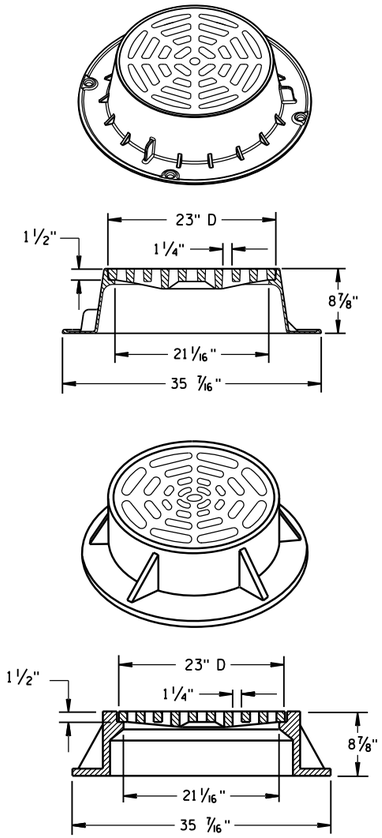

TYPE "C"

NOTE: EITHER CASTING IS ACCEPTABLE

GENERAL NOTES

DETAILS OF CONSTRUCTION, MATERIALS AND WORKMANSHIP NOT SHOWN ON THIS DRAWING SHALL CONFORM TO THE PERTINENT REQUIREMENTS OF THE STANDARD SPECIFICATIONS AND THE APPLICABLE SPECIAL PROVISIONS.

DETAIL DRAWINGS FOR PROPOSED ALTERNATE DESIGNS FOR CATCH BASIN, MANHOLE AND INLET COVERS SHALL BE SUBMITTED TO THE ENGINEER FOR APPROVAL PROVIDING THAT SUCH ALTERNATE DESIGNS MAKE PROVISION FOR EQUIVALENT CAPACITY AND STRENGTH.

ROUND FRAMES AND COVERS SHALL HAVE CONTINUOUSLY MACHINED BEARING SURFACES TO PREVENT ROCKING AND RATTLING.

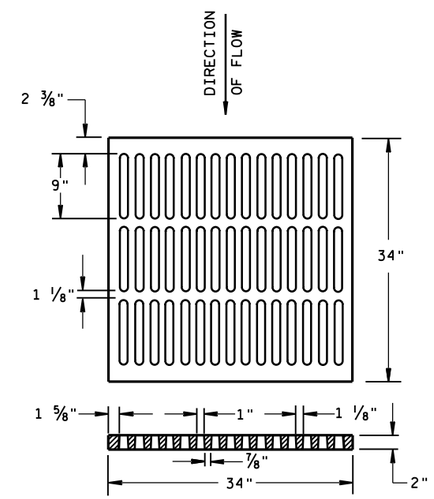

ALTERNATIVE TYPE "MS"

USE WHERE PEDESTRIAN OR BICYCLE TRAFFIC IS PERMITTED

NOTED AS TYPE MS-A ON THE DRAINAGE TABLE

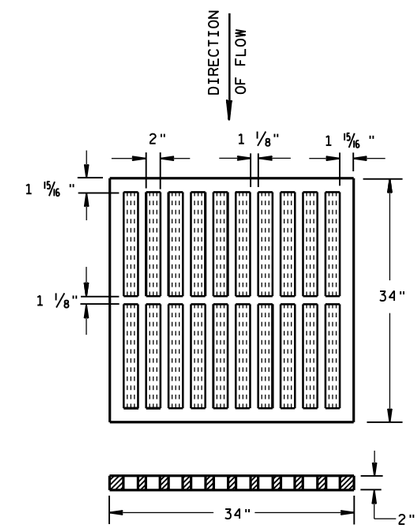

TYPE "MS"

USE ON FREEWAYS AND EXPRESSWAYS

NOTED AS TYPE MS ON DRAINAGE TABLE

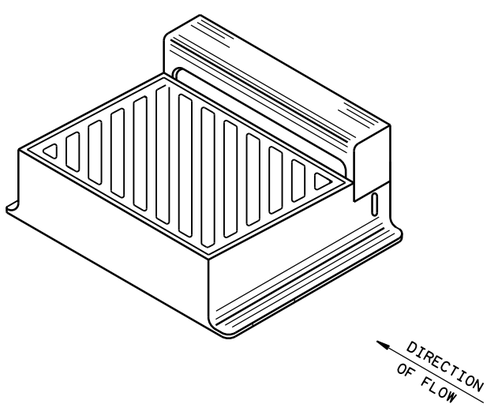

DIAGONAL SLOTS, SHALL BE ORIENTED TO THE DIRECTION OF FLOW AS ILLUSTRATED. GRATES ARE MANUFACTURED TO BE REVERSIBLE.

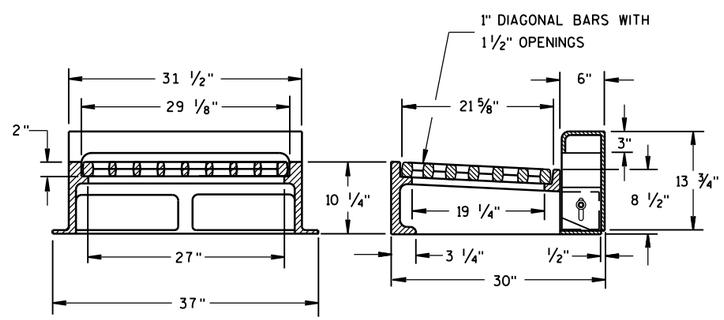

NOTE: CURB BOX HEIGHT ADJUSTABLE 6" TO 9"

TYPE "WM"

INLET COVERS
TYPE B, B-A, C,
MS, MS-A, & WM

STATE OF WISCONSIN
DEPARTMENT OF TRANSPORTATION

APPROVED
11/27/2013 — DATE
/S/ Jerry H. Zogg — ROADWAY STANDARDS DEVELOPMENT ENGINEER
FHWA

6

6

S.D.D. 8 A 5-19b

S.D.D. 8 A 5-19b

Inlet Covers Type B, B-A, C, MS, MS-A, and WM

References:

FDM 13-25-30
Neenah Foundry Company Catalog "Construction Castings"

Bid items associated with this drawing:

ITEM NUMBER	DESCRIPTION	UNIT
611.0606	Inlet Covers Type B	EACH
611.0609	Inlet Covers Type B-A	EACH
611.0612	Inlet Covers Type C	EACH
611.0642	Inlet Covers Type MS	EACH
611.0645	Inlet Covers Type MS-A	EACH
611.0660	Inlet Covers Type WM	EACH

Standardized Special Provisions associated with this drawing:

NONE

Other SDDs associated with this drawing:

NONE

Design Notes:

When alternative grates are required, note a Type B-A or MS-A and use the appropriate bid item number.

Inlet Covers Type B and B-A are placed on Inlets 2x2-FT. Type B and B-A covers may also be placed on Inlets 3-FT and 4-FT Diameter and Catch Basins 3-FT, 4-FT, 5-FT and 6-FT Diameter with a flat top 2x2-FT opening.

Inlet Covers Type C are placed on circular inlets, circular catch basins, and square or circular manholes with a 2' diameter opening size.

Inlet Covers Type MS and MS-A are to be placed on Inlet Median 1, 2, 3, or 4 Grates.

Inlet Covers Type WM is placed on Inlets and Catch Basins 2x2.5-FT. Type WM Covers may also be placed on Inlets 4-FT Diameter and Catch Basins 4-FT, 5-FT and 6-FT Diameter with a flat top 2x2.5-FT opening.

Contact Person:

Ann-Marie Kirsch (608) 267-3766

SDD 8a5-c Inlet Covers Type F, HM, HM-S, S, T, V, HM-GJ, and HM-GJ-S

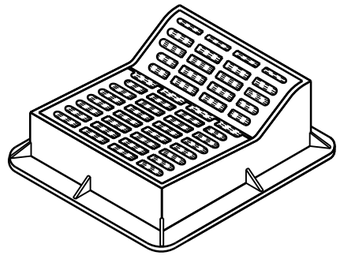

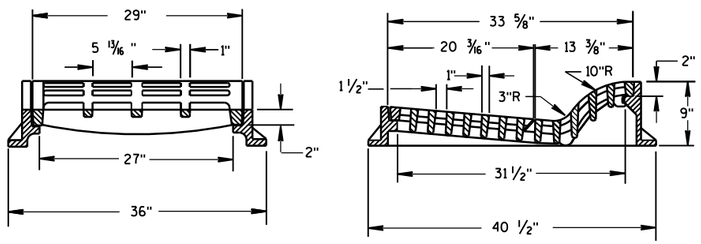

TYPE "F"

USE WITH TYPES A & D CONCRETE CURB & GUTTER, 36 INCH.

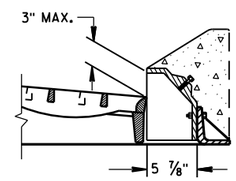

ALTERNATIVE CURB BOX FOR TYPE "HM" COVER

USE WITH TYPES G & J CONCRETE CURB & GUTTER, 30 INCH
NOTED AS TYPE HM-GJ ON DRAINAGE TABLE

NOTE:
SPECIAL GRATE FOR THE
TYPE "H" COVER MAY ALSO BE
USED FOR THE TYPE "HM-GJ" COVER
NOTED AS TYPE HM-GJ-S ON DRAINAGE TABLE

GENERAL NOTES

DETAILS OF CONSTRUCTION, MATERIALS AND WORKMANSHIP NOT SHOWN ON THIS DRAWING SHALL CONFORM TO THE PERTINENT REQUIREMENTS OF THE STANDARD SPECIFICATIONS AND THE APPLICABLE SPECIAL PROVISIONS.

DETAIL DRAWINGS FOR PROPOSED ALTERNATE DESIGNS FOR INLET COVERS SHALL BE SUBMITTED TO THE ENGINEER FOR APPROVAL PROVIDING THAT SUCH ALTERNATE DESIGNS MAKE PROVISION FOR EQUIVALENT CAPACITY AND STRENGTH.

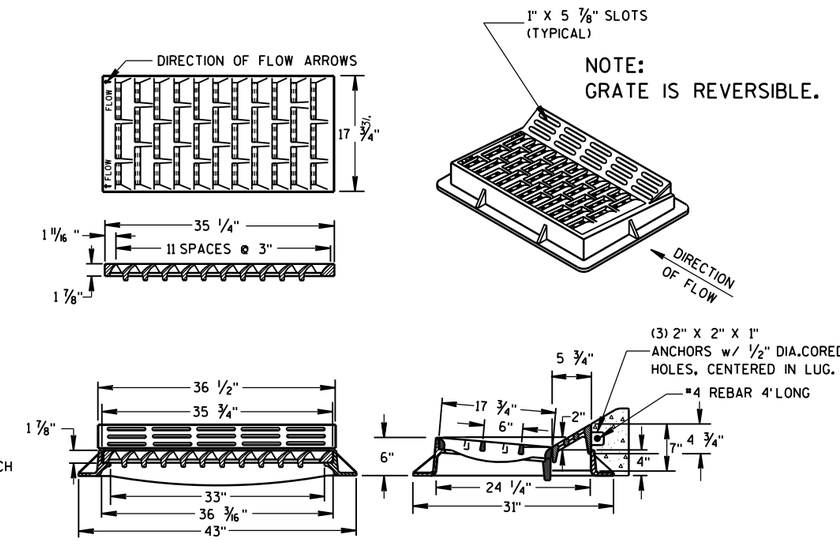

TYPE "HM"

USE WITH TYPES A & D CONCRETE CURB & GUTTER, 36 INCH.

NOTE:
SPECIAL GRATE FOR THE
TYPE "H" COVER MAY ALSO BE
USED FOR THE TYPE "HM" COVER
NOTED AS TYPE HM-S ON DRAINAGE TABLE

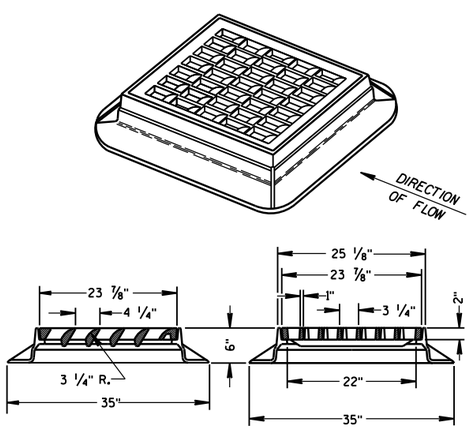

TYPE "S"

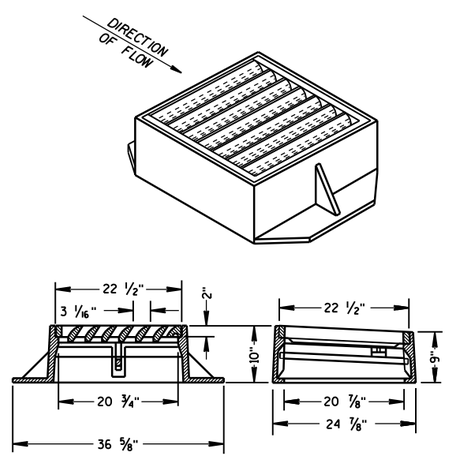

TYPE "V"

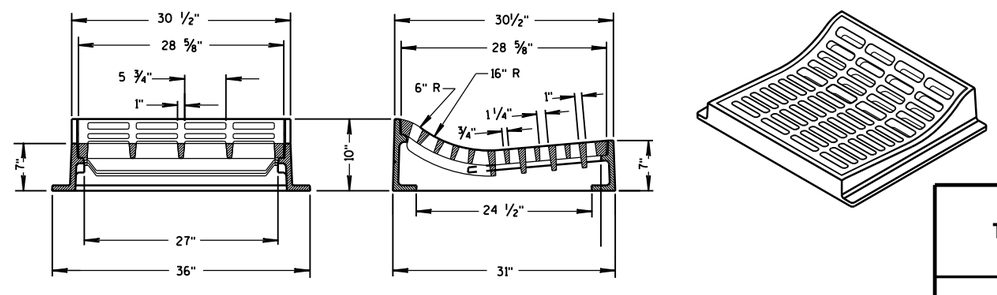

TYPE "T"

USE WITH TYPES R & T CONCRETE CURB & GUTTER, 36 INCH.

INLET COVERS
TYPE F, HM, HM-S, S, T, V, HM-GJ, & HM-GJ-S

STATE OF WISCONSIN
DEPARTMENT OF TRANSPORTATION

APPROVED
11/27/2013 — DATE
/S/ Jerry H. Zogg — ROADWAY STANDARDS DEVELOPMENT ENGINEER
FHWA

6
S.D.D. 8 A 5-19c

Inlet Covers Type F, HM, HM-S, S, T, V, HM-GJ, and HM-GJ-S

References:

FDM 11-20-1
FDM 11-45-10
FDM 13-25-15
FDM 13-25-30
Neenah Foundry Company Catalog "Construction Castings"

Bid items associated with this drawing:

ITEM NUMBER	DESCRIPTION	UNIT
611.0615	Inlet Covers Type F	EACH
611.0627	Inlet Covers Type HM	EACH
611.0630	Inlet Covers Type HM-GJ	EACH
611.0633	Inlet Covers Type HM-GJ-S	EACH
611.0636	Inlet Covers Type HM-S	EACH
611.0654	Inlet Covers Type V	EACH
611.0651	Inlet Covers Type S	EACH
611.0652	Inlet Covers Type T	EACH

Standardized Special Provisions associated with this drawing:

STSP NUMBER	TITLE
NONE	

Other SDDs associated with this drawing:

NONE

Design Notes:

When special grate is required for Type HM cover, note the inlet as HM-S.

When special grate is required for Type HM-GJ cover, note the inlet as HM-GJ-S. Note alternative curb box for Type HM cover, note the inlet as Type HM-GJ.

Inlet cover Type F is placed on Inlets and Catch Basins 2.5x3-FT. Type F covers may also be placed on Inlets 4-FT Diameter and Catch Basins 4-FT, 5-FT and 6-FT Diameter with a flat top 2.5x3-FT opening.

Inlet Covers Type HM, HM-S, HM-GJ and HM-GJ-S are placed on Inlets and Catch Basins 2x3-FT. Type HM, HM-S, HM-GJ and HM-GJ-S covers may also be placed on Inlets 4-FT Diameter, Catch Basins 4-FT, 5-FT and 6-FT Diameter with a flat top 2x3-FT opening.

Inlet Cover Type S is placed on Inlets 2x2-FT or 2x2.5-FT. Inlet Cover Type S may also be placed on Inlets 3-FT and Catch Basin 3-FT Diameter with a flat top 2x2-FT opening or Inlets 4-FT Diameter and Catch Basins 4-FT, 5-FT and 6-FT Diameter with a flat top 2x2-FT or 2x2.5-FT opening.

Inlet Cover Type T is placed on Inlets 2x2.5-FT. Inlet Cover Type T may also be placed on Inlets 4-FT Diameter and Catch Basin 4-FT, 5-FT and 6-FT Diameter with a flat top 2x2.5-FT opening. Type T covers are used on Type R and T curb and gutter.

Inlet Cover Type V can be placed on Inlets 2x2-FT or 2x2.5-FT. However, Type V have unique dimensions that don't fit these inlets well. Consider using Inlet 3-FT or Catch Basin 3-FT to 6-FT with a 24x21-Inch centered opening. A special construction detail will be required.

Contact Person:

Ann-Marie Kirsch (608) 267-3766

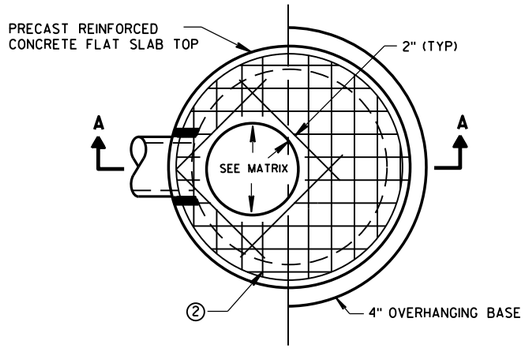

PLAN VIEW CIRCULAR OPENING

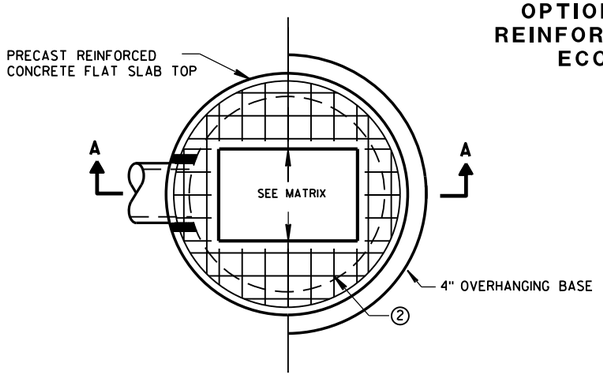

PLAN VIEW RECTANGULAR OPENING

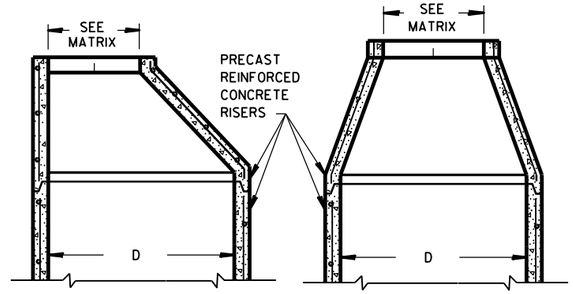

OPTIONAL PRECAST REINFORCED CONCRETE ECCENTRIC TOP

OPTIONAL PRECAST REINFORCED CONCRETE CONCENTRIC TOP

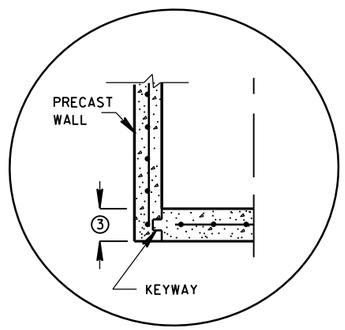

PRECAST REINFORCED CONCRETE WITH INTEGRAL BASE OPTION

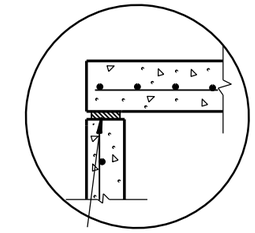

TOP WITH PLAIN END JOINT

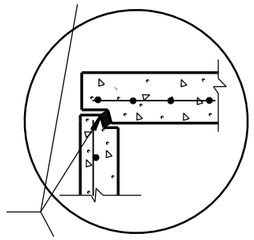

JOINTS TO BE SEALED WITH A BUTYL RUBBER SEAL PER SEALANT MANUFACTURERS RECOMMENDATIONS CONFORMING TO ASTM C 990 (TYP)

TOP WITH TONGUE AND GROOVE JOINT

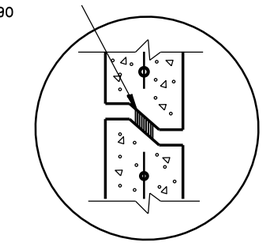

RISER WITH TONGUE AND GROOVE JOINT

DETAIL "B"

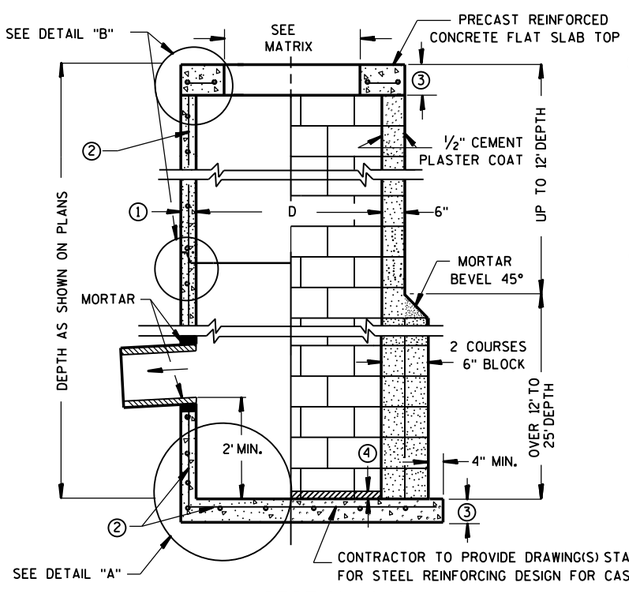

SECTION A-A

PRECAST REINFORCED CONCRETE WITH MONOLITHIC BASE

CONCRETE BLOCK WITH CAST-IN-PLACE OR PRECAST REINFORCED CONCRETE BASE ②

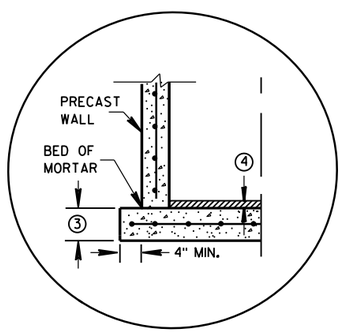

SEPARATE PRECAST REINFORCED CONCRETE BASE OPTION

DETAIL "A"

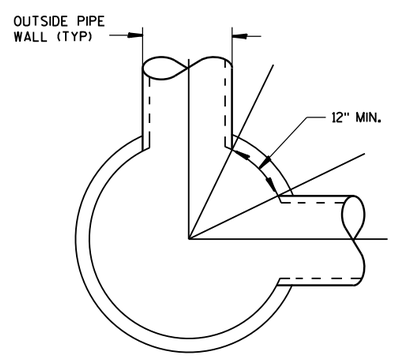

DETAIL "C"

GENERAL NOTES

DETAILS OF CONSTRUCTION, MATERIALS AND WORKMANSHIP NOT SHOWN ON THIS DRAWING SHALL CONFORM TO THE PERTINENT REQUIREMENTS OF THE STANDARD SPECIFICATIONS AND THE APPLICABLE SPECIAL PROVISIONS.

UNLESS OTHERWISE AUTHORIZED IN WRITING BY THE ENGINEER, THE CONTRACTOR SHALL NOT ORDER AND DELIVER PRECAST CATCH BASIN UNITS REQUIRED FOR THE PROJECT UNTIL A LIST OF SIZES IS FURNISHED BY THE ENGINEER.

DETAILED DRAWINGS FOR PROPOSED ALTERNATE DESIGNS FOR UNDERGROUND DRAINAGE STRUCTURES SHALL BE SUBMITTED TO THE ENGINEER FOR APPROVAL PROVIDING THAT SUCH ALTERNATE DESIGNS MAKE PROVISION FOR EQUIVALENT CAPACITY AND STRENGTH.

ALL DRAINAGE STRUCTURES ARE DESIGNATED ON THE PLANS AS "MANHOLES 3X3-L", "CATCH BASINS 4-B", "INLETS 2X3-H", ETC. THE FIRST NUMBERS DESIGNATE THE SIZE OF THE STRUCTURE, AND THE FOLLOWING LETTER DESIGNATES THE TYPE OF COVER TO BE USED TO COMPRISE THE COMPLETE UNIT.

BASES SHALL BE PLACED ON A BED OF MATERIAL AT LEAST 6 INCHES IN DEPTH, WHICH MEETS THE REQUIREMENTS OF FOUNDATION BACKFILL. THIS BEDDING SHALL BE COMPACTED AND PROVIDE UNIFORM SUPPORT FOR THE ENTIRE AREA OF THE BASE.

PRECAST REINFORCED CONCRETE CONE TOPS (ECCENTRIC OR CONCENTRIC) OR PRECAST REINFORCED CONCRETE FLAT SLAB TOPS MAY BE USED ON CONCRETE BLOCK STRUCTURES.

ECCENTRIC CONE TOPS MAY BE USED ON ALL STRUCTURES, AND CONCENTRIC CONE TOPS SHALL BE USED ONLY ON STRUCTURES 5 FEET OR LESS IN DEPTH, UNLESS OTHERWISE DIRECTED BY THE ENGINEER.

STEPS MEETING AASHTO M199 AND THE FOLLOWING REQUIREMENTS SHALL BE INSTALLED IN ALL STRUCTURES OVER 5 FEET IN DEPTH: 16 INCH C-C MAXIMUM SPACING; PROJECT A MINIMUM CLEAR DISTANCE OF 4 INCHES FROM THE WALL AT THE POINT OF EMBEDMENT; MINIMUM LENGTH OF 10 INCHES; MINIMUM WALL EMBEDMENT OF 3 INCHES. FERROUS METAL STEPS NOT PAINTED OR TREATED TO RESIST CORROSION SHALL HAVE A MINIMUM CROSS SECTIONAL DIMENSION OF 1 INCH.

STEPS OF APPROVED POLYPROPYLENE PLASTIC COATED REINFORCEMENT BAR ARE ACCEPTABLE. REINFORCING BAR MUST BE A MINIMUM OF ½ INCH AND MEET THE REQUIREMENTS OF ASTM A615.

CERTIFICATION SHALL BE PROVIDED THAT INSTALLED STEPS WHEN TESTED IN ACCORDANCE WITH SECTION 10 OF AASHTO T280 CAN WITHSTAND A VERTICAL LOAD OF 800 LBS. AND A HORIZONTAL LOAD OF 400 LBS.

ALL BAR STEEL REINFORCEMENT SHALL BE EMBEDDED 2 INCHES CLEAR UNLESS OTHERWISE SHOWN OR NOTED.

ALL PRECAST INLET UNITS SHALL CONFORM TO THE PERTINENT REQUIREMENTS OF AASHTO DESIGNATION M199.

PRECAST REINFORCED RISERS SHALL HAVE A TONGUE AND GROOVE JOINT WITH TONGUE UP OR DOWN.

CONCRETE BLOCK WILL NOT BE PERMITED FOR STRUCTURES GREATER THAN 4 FEET IN DIAMETER.

4" OVERHANGING BASES ARE REQUIRED FOR ALL CONCRETE BLOCK INSTALLATIONS. 4" OVERHANG IS REQUIRED WHEN SEPARATE PRECAST BASE IS PROVIDED. OVERHANG IS NOT REQUIRED ON PRECAST STRUCTURES WITH AN INTEGRAL OR MONOLITHIC BASE.

FOR ADDITIONAL CONFIGURATIONS, MAINTAIN A MINIMUM OF 12 INCHES AS MEASURED FROM THE INSIDE OF THE STRUCTURE WALL BETWEEN THE OUTSIDE PIPE WALLS OF ADJACENT PIPES. SEE DETAIL "C".

① MINIMUM WALL THICKNESS SHALL BE 4 INCHES FOR 3-FT, 5 INCHES FOR 4-FT, 6 INCHES FOR 5-FT AND 7 INCHES FOR 6-FT DIAMETER PRECAST CATCH BASINS.

② FOR PRECAST CATCH BASINS PROVIDE REINFORCING STEEL IN ACCORDANCE TO AASHTO M199.

③ PRECAST FLAT SLAB TOPS AND BASES WITH A DIAMETER OF 48" AND LESS SHALL HAVE A MINIMUM THICKNESS OF 6". PRECAST FLAT SLAB TOPS AND BASES WITH A DIAMETER LARGER THAN 48" SHALL HAVE A MINIMUM THICKNESS OF 8".

④ 1" CONCRETE KEY POURED AFTER INSTALLATION. 2' SUMP MEASURED FROM TOP OF KEY.

CATCH BASIN COVER OPENING MATRIX

CATCH BASIN SIZE	INLET COVER TYPE	ALL A'S	ALL B'S	BW	C	F	ALL H'S	S	T	V	WM	Z
	OPENING SIZE (FT)											
3-FT	2X2	X	X					X		X		
	2 DIA.				X							X
4-FT-6-FT	2X2	X	X					X		X		
	2X2.5			X				X	X	X	X	
	2 DIA.				X							X
	2X3						X					
	2.5X3					X						

PIPE MATRIX

CATCH BASIN SIZE	MAXIMUM INSIDE PIPE DIAMETER FOR TWO PIPES	
	180° SEPARATION (IN)	90° SEPARATION (IN)
3-FT	15	12
4-FT	24	18
5-FT	36	24
6-FT	42	30

CATCH BASINS 3-FT, 4-FT, 5-FT AND 6-FT DIAMETER

CATCH BASINS 3-FT, 4-FT, 5-FT AND 6-FT DIAMETER

STATE OF WISCONSIN
DEPARTMENT OF TRANSPORTATION

APPROVED
Sept., 2016 — DATE
/S/ Rodney Taylor — ROADWAY STANDARDS DEVELOPMENT UNIT SUPERVISOR
FHWA

Catch Basins 3-FT, 4-FT, 5-FT and 6-FT Diameter

References:

FDM 13-25-30

Bid items associated with this drawing:

ITEM NUMBER	DESCRIPTION	UNIT
611.1003	Catch Basins 3-FT Diameter	EACH
611.1004	Catch Basins 4-FT Diameter	EACH
611.1005	Catch Basins 5-FT Diameter	EACH
611.1006	Catch Basins 6-FT Diameter	EACH

Standardized Special Provisions associated with this drawing:

STSP NUMBER	TITLE
NONE	

Other SDDs associated with this drawing:

SDD 8A5	Inlet cover sheets "a", "b", "c" and "d".
SDD 8D17	Manholes, Manhole and Inlet Covers

Design Notes:

Guidelines for matching catch basin opening size and inlet covers are provided on the front side of this SDD.

A pipe matrix on the front side of this SDD provides guidance for selecting the maximum inside pipe diameter.

If a sump depth greater than 2' is required this must be specified in the miscellaneous quantities comments.

Catch Basins should be used only on projects that have a maintenance agreement for cleaning the sumps. Catch basins should not be used in municipalities that do not want them because of insect control.

Contact Person:

Ed Lilla (608) 266-2312

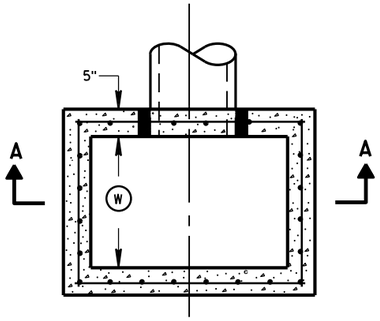

PLAN VIEW

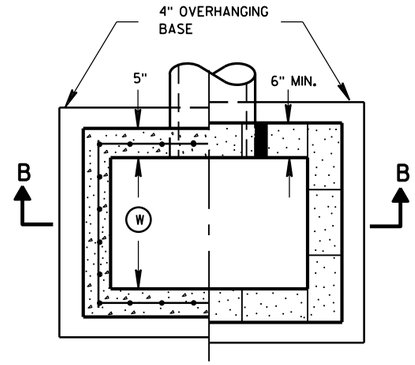

PLAN VIEW

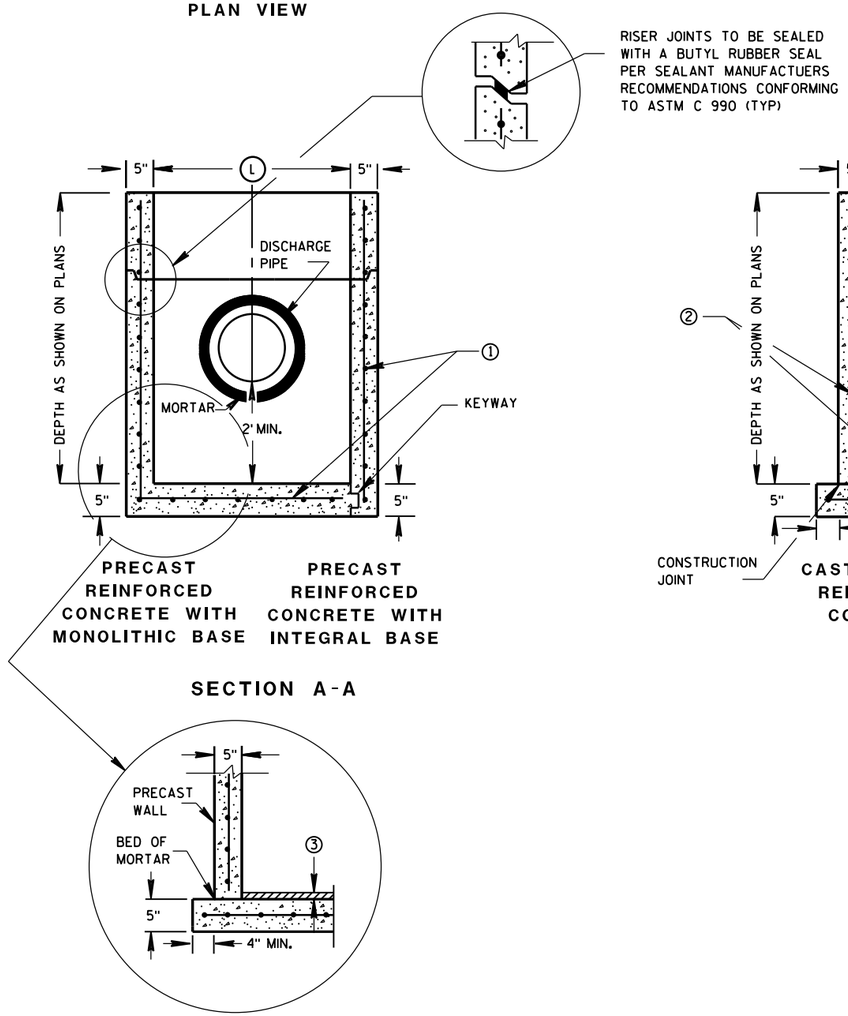

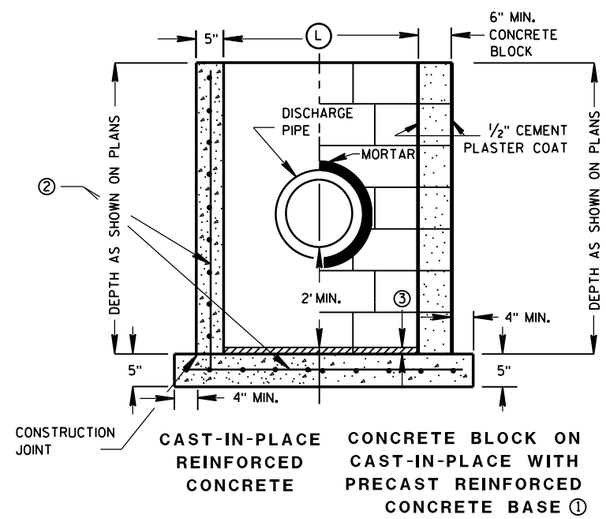

GENERAL NOTES

DETAILS OF CONSTRUCTION, MATERIALS AND WORKMANSHIP NOT SHOWN ON THIS DRAWING SHALL CONFORM TO THE PERTINENT REQUIREMENTS OF THE STANDARD SPECIFICATIONS AND THE APPLICABLE SPECIAL PROVISIONS.

UNLESS OTHERWISE AUTHORIZED IN WRITING BY THE ENGINEER, THE CONTRACTOR SHALL NOT ORDER AND DELIVER PRECAST CATCH BASIN UNITS REQUIRED FOR THE PROJECT UNTIL A LIST OF SIZES IS FURNISHED BY THE ENGINEER.

DETAILED DRAWINGS FOR PROPOSED ALTERNATE DESIGNS FOR UNDERGROUND DRAINAGE STRUCTURES SHALL BE SUBMITTED TO THE ENGINEER FOR APPROVAL PROVIDING THAT SUCH ALTERNATE DESIGNS MAKE PROVISION FOR EQUIVALENT CAPACITY AND STRENGTH.

ALL PRECAST CATCH BASIN UNITS SHALL CONFORM TO THE PERTINENT REQUIREMENTS OF ASTM C 913.

ALL DRAINAGE STRUCTURES ARE DESIGNATED ON THE PLANS AS "MANHOLES 3X3-L", "CATCH BASINS 4-B", "INLETS 2X3-H", ETC. THE FIRST NUMBERS DESIGNATES THE SIZE OF THE STRUCTURE, AND THE FOLLOWING LETTER DESIGNATES THE TYPE OF COVER TO BE USED TO COMPRISE THE COMPLETE UNIT.

BASES SHALL BE PLACED ON A BED OF MATERIAL AT LEAST 6 INCHES IN DEPTH, WHICH MEETS THE REQUIREMENTS OF FOUNDATION BACKFILL. THIS BEDDING SHALL BE COMPACTED AND PROVIDE UNIFORM SUPPORT FOR THE ENTIRE AREA OF THE BASE.

ALL BAR STEEL REINFORCEMENT SHALL BE EMBEDDED 2 INCHES CLEAR UNLESS OTHERWISE SHOWN OR NOTED.

PRECAST REINFORCED RISERS SHALL HAVE A TONGUE AND GROOVE JOINT WITH TONGUE UP OR DOWN.

4" OVERHANGING BASES ARE REQUIRED FOR CAST-IN-PLACE REINFORCED CONCRETE AND CONCRETE BLOCK INSTALLATIONS.
4" OVERHANG IS REQUIRED WHEN SEPARATE PRECAST BASE IS PROVIDED.
OVERHANG IS NOT REQUIRED ON PRECAST STRUCTURES WITH AN INTEGRAL OR MONOLITHIC BASE.

MAXIMUM INSIDE PIPE DIAMETER DETERMINED BY 3" CLEARANCE ON EACH SIDE OF THE OUTSIDE WALL OF THE PIPE. SEE DETAIL "A". ASSUMES PIPE ENTERS PERPENDICULAR TO THE STRUCTURE.

① FOR PRECAST CATCH BASINS PROVIDE REINFORCING STEEL IN ACCORDANCE TO ASTM C 913.

② CONTRACTOR TO PROVIDE DRAWING(S) STAMPED BY A PROFESSIONAL ENGINEER FOR STEEL REINFORCING DESIGN FOR CAST-IN-PLACE STRUCTURES.

③ 1" CONCRETE KEY POURED AFTER INSTALLATION. 2' SUMP MEASURED FROM TOP OF KEY.

CATCH BASIN COVER MATRIX

CATCH BASIN SIZE		INLET COVER TYPE	F	ALL H'S
	WIDTH (W) (FT)	LENGTH (L) (FT)		
2X3-FT	2	3		X
2.5X3-FT	2.5	3	X	

PIPE MATRIX

CATCH BASIN SIZE	MAXIMUM INSIDE PIPE DIAMETER FOR TWO PIPES	
	WIDTH (IN)	LENGTH (IN)
2X3-FT	12	24
2.5X3-FT	18	24

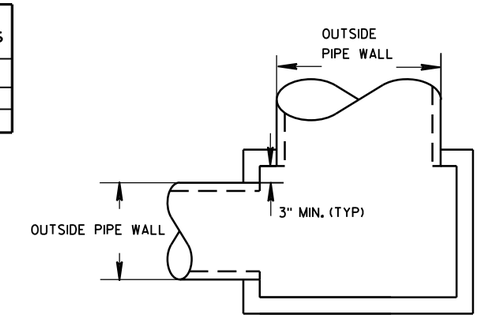

DETAIL "A"

CATCH BASINS 2X3-FT AND 2.5X3-FT

CATCH BASINS 2X3-FT AND 2.5X3-FT

STATE OF WISCONSIN
DEPARTMENT OF TRANSPORTATION

APPROVED
Sept., 2016 — DATE
/S/ Rodney Taylor — ROADWAY STANDARDS DEVELOPMENT UNIT SUPERVISOR
FHWA

6
S.D.D. 8 A 9-2

Catch Basins 2x3-FT and 2.5x3-FT

References:

FDM 13-25-30

Bid items associated with this drawing:

ITEM NUMBER	DESCRIPTION	UNIT
611.1230	Catch Basins 2x3-FT	EACH
611.1253	Catch Basins 2.5x3-FT	EACH

Standardized Special Provisions associated with this drawing:

STSP NUMBER	TITLE
NONE	

Other SDDs associated with this drawing:

SDD 8A5	Inlet cover sheets "a" and "c"
SDD 8D17	Manholes, Manhole and Inlet Covers

Design Notes:

Guidelines for matching catch basin opening size and inlet covers are provided on the front side of this SDD.

A pipe matrix on the front side of this SDD provides guidance for selecting the maximum inside pipe diameter. The inside pipe diameter was determined by the pipe entering perpendicular to the structure at 90°. Pipes entering at a skewed angle should be evaluated on a case by case basis.

If a sump depth greater than 2' is required this must be specified in the miscellaneous quantities comments.

Catch Basins should be used only on projects that have a maintenance agreement for cleaning the sumps. Catch basins should not be used in municipalities that do not want them because of insect control.

Contact Person:

Ed Lilla (608) 266-2312

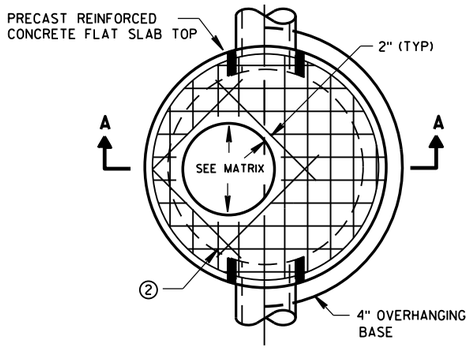

PLAN VIEW CIRCULAR OPENING

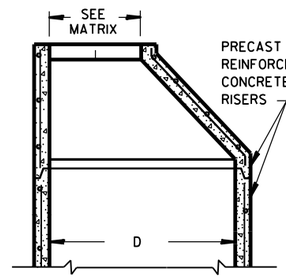

OPTIONAL PRECAST REINFORCED CONCRETE ECCENTRIC TOP

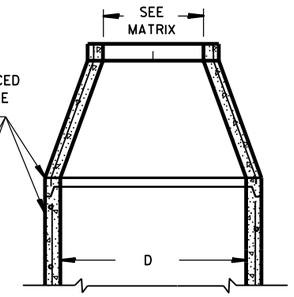

OPTIONAL PRECAST REINFORCED CONCRETE CONCENTRIC TOP

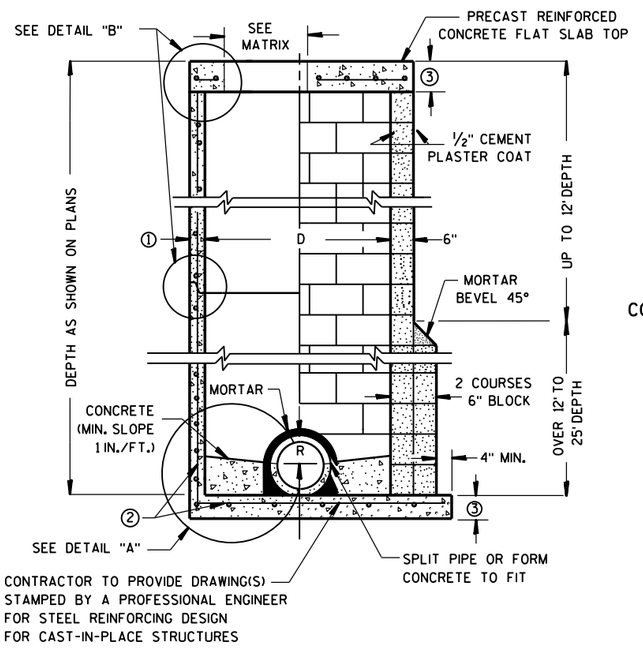

PRECAST REINFORCED CONCRETE WITH MONOLITHIC BASE

CONCRETE BLOCK WITH CAST-IN-PLACE OR PRECAST REINFORCED CONCRETE BASE ②

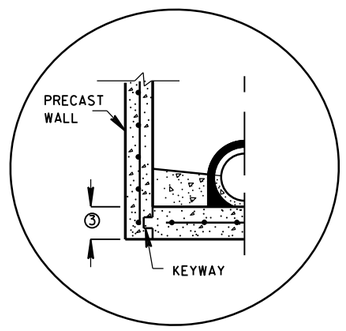

PRECAST REINFORCED CONCRETE WITH INTEGRAL BASE OPTION

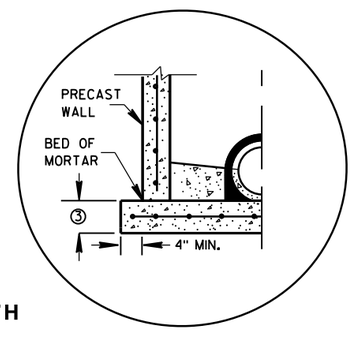

SEPARATE PRECAST REINFORCED CONCRETE BASE OPTION

DETAIL "A"

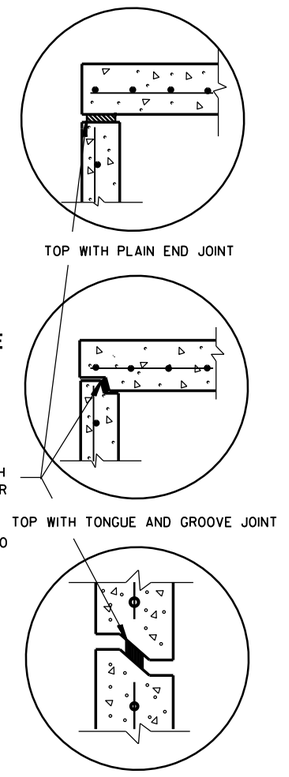

RISER WITH TONGUE AND GROOVE JOINT

DETAIL "B"

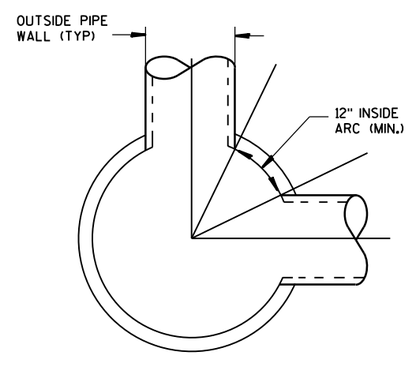

DETAIL "C"

GENERAL NOTES

DETAILS OF CONSTRUCTION, MATERIALS AND WORKMANSHIP NOT SHOWN ON THIS DRAWING SHALL CONFORM TO THE PERTINENT REQUIREMENTS OF THE STANDARD SPECIFICATIONS AND THE APPLICABLE SPECIAL PROVISIONS.

UNLESS OTHERWISE AUTHORIZED IN WRITING BY THE ENGINEER, THE CONTRACTOR SHALL NOT ORDER AND DELIVER PRECAST MANHOLE UNITS REQUIRED FOR THE PROJECT UNTIL A LIST OF SIZES IS FURNISHED BY THE ENGINEER.

DETAILED DRAWINGS FOR PROPOSED ALTERNATE DESIGNS FOR UNDERGROUND DRAINAGE STRUCTURES SHALL BE SUBMITTED TO THE ENGINEER FOR APPROVAL PROVIDING THAT SUCH ALTERNATE DESIGNS MAKE PROVISION FOR EQUIVALENT CAPACITY AND STRENGTH.

ALL DRAINAGE STRUCTURES ARE DESIGNATED ON THE PLANS AS "MANHOLES 3X3-L", "CATCH BASINS 4-B", "INLETS 2X3-H", ETC. THE FIRST NUMBERS DESIGNATE THE SIZE OF THE STRUCTURE, AND THE FOLLOWING LETTER DESIGNATES THE TYPE OF COVER TO BE USED TO COMPRISE THE COMPLETE UNIT.

BASES SHALL BE PLACED ON A BED OF MATERIAL AT LEAST 6 INCHES IN DEPTH, WHICH MEETS THE REQUIREMENTS OF FOUNDATION BACKFILL. THIS BEDDING SHALL BE COMPACTED AND PROVIDE UNIFORM SUPPORT FOR THE ENTIRE AREA OF THE BASE.

PRECAST REINFORCED CONE TOPS (ECCENTRIC OR CONCENTRIC) OR PRECAST REINFORCED FLAT SLAB TOPS MAY BE USED ON CONCRETE BLOCK STRUCTURES.

ECCENTRIC CONE TOPS MAY BE USED ON ALL STRUCTURES, AND CONCENTRIC CONE TOPS SHALL BE USED ONLY ON STRUCTURES 5 FEET OR LESS IN DEPTH, UNLESS OTHERWISE DIRECTED BY THE ENGINEER.

STEPS MEETING AASHTO M199 AND THE FOLLOWING REQUIREMENTS SHALL BE INSTALLED IN ALL STRUCTURES OVER 5 FEET IN DEPTH: 16 INCH C-C MAXIMUM SPACING; PROJECT A MINIMUM CLEAR DISTANCE OF 4 INCHES FROM THE WALL AT THE POINT OF EMBEDMENT; MINIMUM LENGTH OF 10 INCHES; MINIMUM WALL EMBEDMENT OF 3 INCHES. FERROUS METAL STEPS NOT PAINTED OR TREATED TO RESIST CORROSION SHALL HAVE A MINIMUM CROSS SECTIONAL DIMENSION OF 1 INCH.

STEPS OF APPROVED POLYPROPYLENE PLASTIC COATED REINFORCEMENT BAR ARE ACCEPTABLE. REINFORCING BAR MUST BE A MINIMUM OF ½" AND MEET THE REQUIREMENTS OF ASTM A615.

CERTIFICATION SHALL BE PROVIDED THAT INSTALLED STEPS WHEN TESTED IN ACCORDANCE WITH SECTION 10 OF AASHTO T280 CAN WITHSTAND A VERTICAL LOAD OF 800 LBS. AND A HORIZONTAL LOAD OF 400 LBS.

ALL BAR STEEL REINFORCEMENT SHALL BE EMBEDDED 2 INCHES CLEAR UNLESS OTHERWISE SHOWN OR NOTED.

CONCRETE BLOCK WILL NOT BE PERMITED FOR STRUCTURES GREATER THAN 4 FEET IN DIAMETER.

PRECAST REINFORCED RISERS SHALL HAVE A TONGUE AND GROOVE JOINT WITH TONGUE UP OR DOWN.

ALL PRECAST MANHOLE UNITS SHALL CONFORM TO THE PERTINENT REQUIREMENTS OF AASHTO DESIGNATION M 199.

4" OVERHANGING BASES ARE REQUIRED FOR ALL CONCRETE BLOCK INSTALLATIONS. 4" OVERHANG IS REQUIRED WHEN SEPARATE PRECAST BASE IS PROVIDED. OVERHANG IS NOT REQUIRED ON PRECAST STRUCTURES WITH AN INTEGRAL OR MONOLITHIC BASE.

FOR ADDITIONAL CONFIGURATIONS, MAINTAIN A MINIMUM OF 12 INCHES AS MEASURED FROM THE INSIDE OF THE STRUCTURE WALL BETWEEN THE OUTSIDE PIPE WALLS OF ADJACENT PIPES. SEE DETAIL "C".

① MINIMUM WALL THICKNESS SHALL BE 4 INCHES FOR 3-FT, 5 INCHES FOR 4-FT, 6 INCHES FOR 5-FT, 7 INCHES FOR 6-FT, 8 INCHES FOR 7-FT AND 9 INCHES FOR 8-FT DIAMETER PRECAST MANHOLES.

② FOR PRECAST MANHOLES PROVIDE REINFORCING STEEL IN ACCORDANCE TO AASHTO M199.

③ PRECAST FLAT SLAB TOPS AND BASES WITH A DIAMETER OF 48" AND LESS SHALL HAVE A MINIMUM THICKNESS OF 6". PRECAST FLAT SLAB TOPS AND BASES WITH A DIAMETER LARGER THAN 48" SHALL HAVE A MINIMUM THICKNESS OF 8".

MANHOLE COVER OPENING MATRIX

MANHOLE COVER TYPE	C	ALL J'S	K	L	M
OPENING SIZE (FT)					
2 DIA.	X	X		X	
3 DIA.			X		X

PIPE MATRIX

MANHOLE SIZE	MAXIMUM INSIDE PIPE DIAMETER FOR TWO PIPES	
	180° SEPARATION (IN)	90° SEPARATION (IN)
3-FT	15	12
4-FT	24	18
5-FT	36	24
6-FT	42	36
7-FT	48	36
8-FT	60	42

MANHOLES 3-FT, 4-FT, 5-FT, 6-FT, 7-FT AND 8-FT DIAMETER

MANHOLES 3-FT, 4-FT, 5-FT, 6-FT, 7-FT AND 8-FT DIAMETER

STATE OF WISCONSIN
DEPARTMENT OF TRANSPORTATION

APPROVED
Sept., 2016 — DATE
/S/ Rodney Taylor — ROADWAY STANDARDS DEVELOPMENT UNIT SUPERVISOR
FHWA

Manholes 3-FT, 4-FT, 5-FT, 6-FT, 7-FT, and 8-FT Diameter

References:

FDM 13-25-15

Bid items associated with this drawing:

ITEM NUMBER	DESCRIPTION	UNIT
611.2003	Manholes 3-FT Diameter	EACH
611.2004	Manholes 4-FT Diameter	EACH
611.2005	Manholes 5-FT Diameter	EACH
611.2006	Manholes 6-FT Diameter	EACH
611.2007	Manholes 7-FT Diameter	EACH
611.2008	Manholes 8-FT Diameter	EACH

Standardized Special Provisions associated with this drawing:

STSP NUMBER	TITLE
NONE	

Other SDDs associated with this drawing:

SDD 8A5	Inlet cover sheets "b" and "d".
SDD 8D17	Manholes, Manhole and Inlet Covers

Design Notes:

Guidelines for matching manhole opening size and manhole covers are provided on the front side of this SDD.

A pipe matrix on the front side of this SDD guidance for selecting the maximum inside pipe diameter.

Manholes should be used as follows:

1. For cleaning and maintenance locations spaced as recommended in FDM chapter 13
2. At changes in pipe size
3. At bends in pipe
4. Where flow needs to be split or diverted

Precast concrete manholes 10' and 12' in diameter are available but require a special construction detail. A structural design should be completed to determine the wall thickness and steel requirements for the top, walls and base.

Contact Person:

Ed Lilla (608) 266-2312

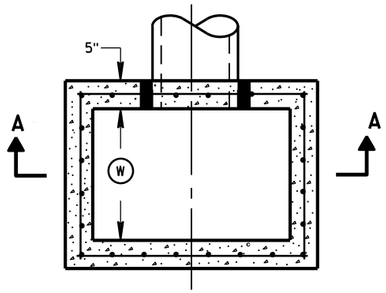

PLAN VIEW

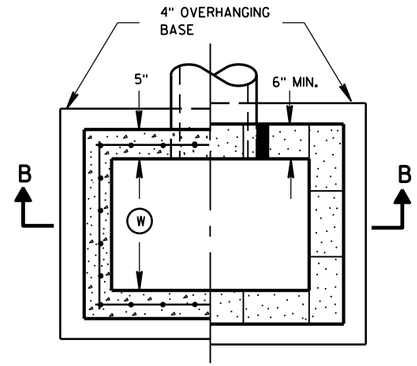

PLAN VIEW

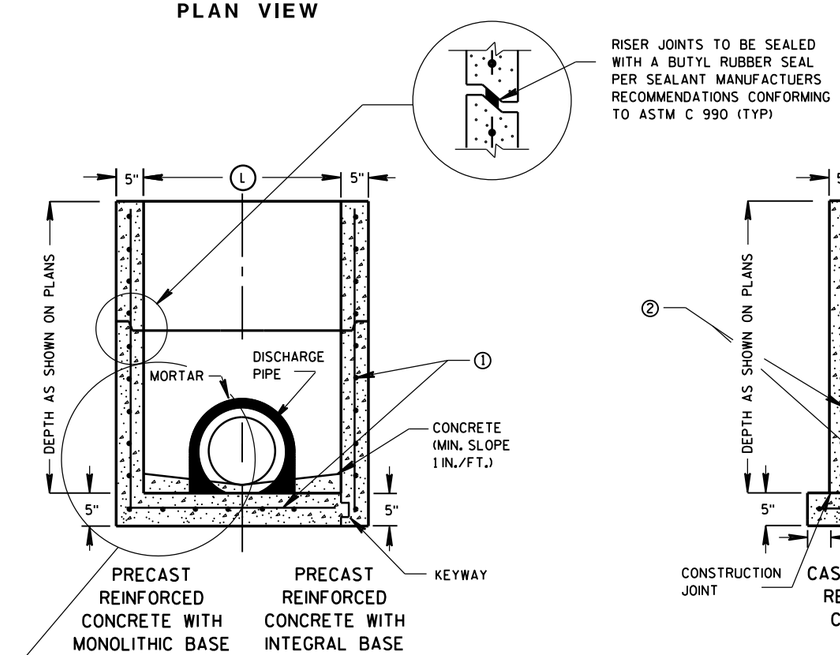

SECTION A-A

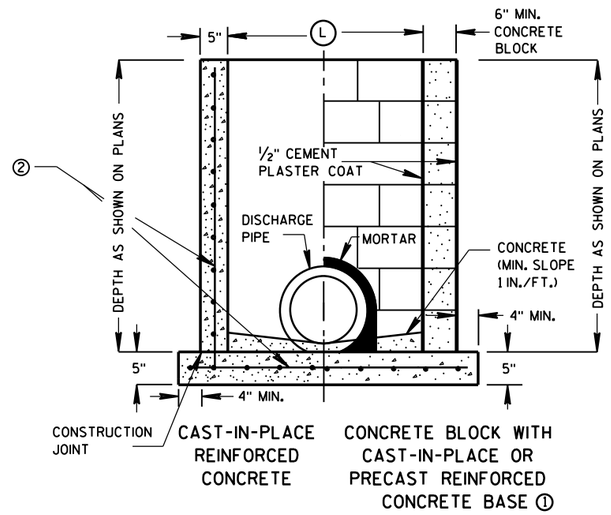

SECTION B-B

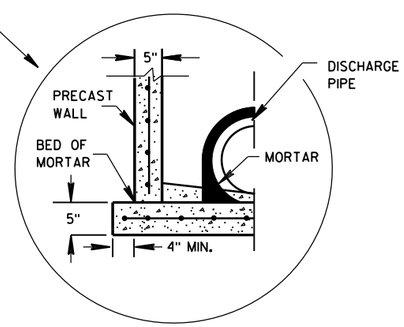

SEPARATE PRECAST REINFORCED CONCRETE BASE OPTION

GENERAL NOTES

DETAILS OF CONSTRUCTION, MATERIALS AND WORKMANSHIP NOT SHOWN ON THIS DRAWING SHALL CONFORM TO THE PERTINENT REQUIREMENTS OF THE STANDARD SPECIFICATIONS AND THE APPLICABLE SPECIAL PROVISIONS.

UNLESS OTHERWISE AUTHORIZED IN WRITING BY THE ENGINEER, THE CONTRACTOR SHALL NOT ORDER AND DELIVER PRECAST INLET UNITS REQUIRED FOR THE PROJECT UNTIL A LIST OF SIZES IS FURNISHED BY THE ENGINEER.

DETAILED DRAWINGS FOR PROPOSED ALTERNATE DESIGNS FOR UNDERGROUND DRAINAGE STRUCTURES SHALL BE SUBMITTED TO THE ENGINEER FOR APPROVAL PROVIDING THAT SUCH ALTERNATE DESIGNS MAKE PROVISION FOR EQUIVALENT CAPACITY AND STRENGTH.

ALL PRECAST INLET UNITS SHALL CONFORM TO THE PERTINENT REQUIREMENTS OF ASTM C 913.

ALL DRAINAGE STRUCTURES ARE DESIGNATED ON THE PLANS AS "MANHOLES 3X3-L", "CATCH BASINS 4-B", "INLETS 2X3-H", ETC. THE FIRST NUMBERS DESIGNATES THE SIZE OF THE STRUCTURE, AND THE FOLLOWING LETTER DESIGNATES THE TYPE OF COVER TO BE USED TO COMPRISE THE COMPLETE UNIT.

BASES SHALL BE PLACED ON A BED OF MATERIAL AT LEAST 6 INCHES IN DEPTH, WHICH MEETS THE REQUIREMENTS OF FOUNDATION BACKFILL. THIS BEDDING SHALL BE COMPACTED AND PROVIDE UNIFORM SUPPORT FOR THE ENTIRE AREA OF THE BASE.

ALL BAR STEEL REINFORCEMENT SHALL BE EMBEDDED 2 INCHES CLEAR UNLESS OTHERWISE SHOWN OR NOTED.

PRECAST REINFORCED RISERS SHALL HAVE A TONGUE AND GROOVE JOINT WITH TONGUE UP OR DOWN.

4" OVERHANGING BASES ARE REQUIRED FOR CAST-IN-PLACE REINFORCED CONCRETE AND CONCRETE BLOCK INSTALLATIONS.
4" OVERHANG IS REQUIRED WHEN SEPARATE PRECAST BASE IS PROVIDED.
OVERHANG IS NOT REQUIRED ON PRECAST STRUCTURES WITH AN INTEGRAL OR MONOLITHIC BASE.

MAXIMUM INSIDE PIPE DIAMETER DETERMINED BY 3 INCH CLEARANCE ON EACH SIDE OF THE OUTSIDE WALL OF THE PIPE. SEE DETAIL "A". ASSUMES PIPE ENTERS PERPENDICULAR TO THE STRUCTURE.

① FOR PRECAST INLETS PROVIDE REINFORCING STEEL IN ACCORDANCE TO ASTM C 913.

② CONTRACTOR TO PROVIDE DRAWING(S) STAMPED BY A PROFESSIONAL ENGINEER FOR STEEL REINFORCING DESIGN FOR CAST-IN-PLACE STRUCTURES.

INLET COVER MATRIX

INLET SIZE		INLET COVER TYPE	ALL A'S	ALL B'S	BW	F	ALL H'S	S	T	V	WM
	WIDTH (W) (FT)	LENGTH (L) (FT)									
2X2-FT	2	2	X	X				X		X	
2X2.5-FT	2	2.5			X			X	X	X	X
2X3-FT	2	3					X				
2.5X3-FT	2.5	3				X					

PIPE MATRIX

INLET SIZE	MAXIMUM INSIDE PIPE DIAMETER	
	WIDTH (IN)	LENGTH (IN)
2X2-FT	12	12
2X2.5-FT	12	18
2X3-FT	12	24
2.5X3-FT	18	24

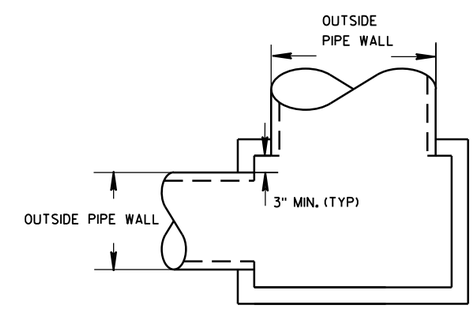

DETAIL "A"

INLETS 2X2-FT, 2X2.5-FT, 2X3-FT AND 2.5X3-FT

INLETS 2X2-FT, 2X2.5-FT, 2X3-FT AND 2.5X3-FT

STATE OF WISCONSIN
DEPARTMENT OF TRANSPORTATION

APPROVED
Sept., 2016 — DATE
/S/ Rodney Taylor — ROADWAY STANDARDS DEVELOPMENT UNIT SUPERVISOR
FHWA

Inlets 2x2-FT, 2x2.5-FT, 2x3-FT, and 2.5x3-FT

References:

FDM 13-25-30

Bid items associated with this drawing:

ITEM NUMBER	DESCRIPTION	UNIT
611.3220	Inlets 2x2-FT	EACH
611.3225	Inlets 2x2.5-FT	EACH
611.3230	Inlets 2x3-FT	EACH
611.3253	Inlets 2.5x3-FT	EACH

Standardized Special Provisions associated with this drawing:

STSP NUMBER	TITLE
NONE	

Other SDDs associated with this drawing:

SDD 8A5	Inlet cover sheets "a", "b", "c" and "d".
SDD 8D17	Manholes, Manhole and Inlet Covers

Design Notes:

Guidelines for matching inlet opening size and inlet covers are provided on the front side of this SDD.

A pipe matrix on the front side of this SDD provides guidance for selecting the maximum inside pipe diameter. The inside pipe diameter was determined by the pipe entering perpendicular to the structure at 90°. Pipes entering at a skewed angle should be evaluated on a case by case basis.

Inlets should be kept as shallow as possible to reduce cost.

Contact Person:

Ed Lilla (608) 266-2312

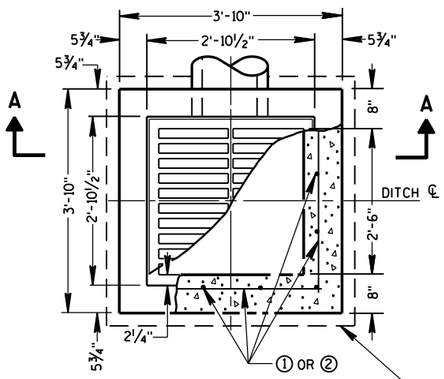

PLAN VIEW

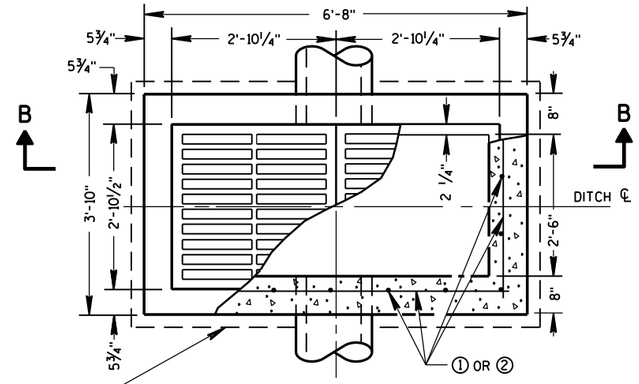

PLAN VIEW

4" OVERHANGING BASE ON REINFORCED CAST-IN-PLACE CONCRETE INLETS

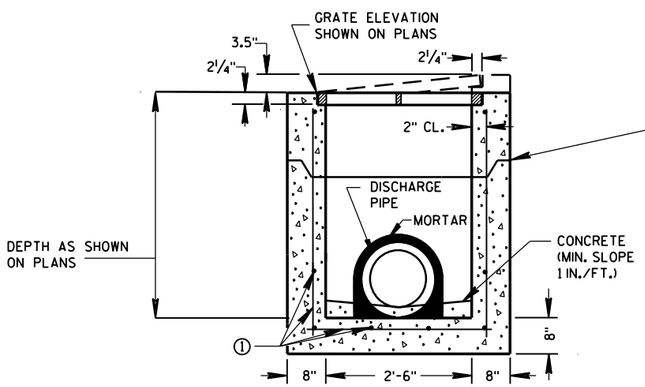

PRECAST REINFORCED CONCRETE SECTION A-A

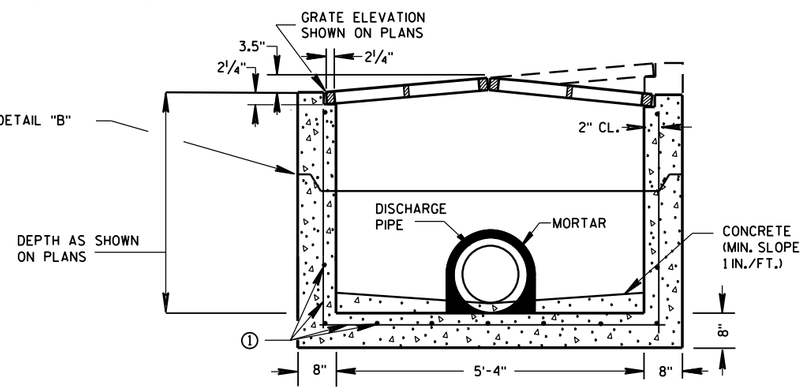

PRECAST REINFORCED CONCRETE SECTION B-B

GENERAL NOTES

DETAILS OF CONSTRUCTION, MATERIALS AND WORKMANSHIP NOT SHOWN ON THIS DRAWING SHALL CONFORM TO THE PERTINENT REQUIREMENTS OF THE STANDARD SPECIFICATIONS AND THE APPLICABLE SPECIAL PROVISIONS.

UNLESS OTHERWISE AUTHORIZED IN WRITING BY THE ENGINEER, THE CONTRACTOR SHALL NOT ORDER AND DELIVER PRECAST INLET UNITS REQUIRED FOR THE PROJECT UNTIL A LIST OF SIZES IS FURNISHED BY THE ENGINEER.

DETAILED DRAWINGS FOR PROPOSED ALTERNATE DESIGNS FOR INLETS WHICH MAY INCLUDE PRECAST REINFORCED CONCRETE INLETS, SHALL BE SUBMITTED TO THE ENGINEER FOR APPROVAL PROVIDING THAT SUCH ALTERNATE DESIGNS MAKE PROVISION FOR EQUIVALENT CAPACITY AND STRENGTH.

ALL MEDIAN INLETS ARE DESIGNATED ON THE PLANS AS "INLETS, 1G-MS", ETC. THE FIRST NUMBER AND LETTER DESIGNATE THE TYPE OF STRUCTURE, AND THE FOLLOWING LETTERS DESIGNATE THE TYPE OF COVER TO BE USED TO COMPRISE THE COMPLETE UNIT.

BASES SHALL BE PLACED ON A BED OF MATERIAL AT LEAST 6 INCHES IN DEPTH, WHICH MEETS THE REQUIREMENTS OF FOUNDATION BACKFILL. THIS BEDDING SHALL BE COMPACTED AND PROVIDE UNIFORM SUPPORT FOR THE ENTIRE AREA OF THE BASE.

ALL BAR STEEL REINFORCEMENT SHALL BE EMBEDDED 2 INCHES CLEAR UNLESS OTHERWISE SHOWN OR NOTED.

PRECAST REINFORCED RISERS SHALL HAVE A TONGUE AND GROOVE JOINT WITH TONGUE UP OR DOWN.

ALL PRECAST INLET UNITS SHALL CONFORM TO THE PERTINENT REQUIREMENTS OF ASTM C 913.

MAXIMUM INSIDE PIPE DIAMETER DETERMINED BY 3" CLEARANCE ON EACH SIDE OF THE OUTSIDE WALL OF THE PIPE. SEE DETAIL "A". ASSUMES PIPE ENTERS PERPENDICULAR TO THE STRUCTURE.

① FOR PRECAST INLETS PROVIDE REINFORCING STEEL IN ACCORDANCE TO ASTM C 913.

② CONTRACTOR TO PROVIDE DRAWING(S) STAMPED BY A PROFESSIONAL ENGINEER FOR STEEL REINFORCING DESIGN FOR CAST-IN-PLACE STRUCTURES.

PIPE MATRIX

	MAXIMUM INSIDE PIPE DIAMETER	
INLET SIZE	WIDTH (IN)	LENGTH (IN)
1 GRATE	18	18
2 GRATE	18	42

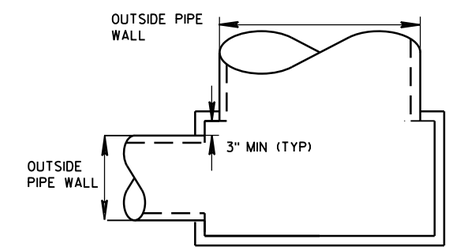

DETAIL "A"

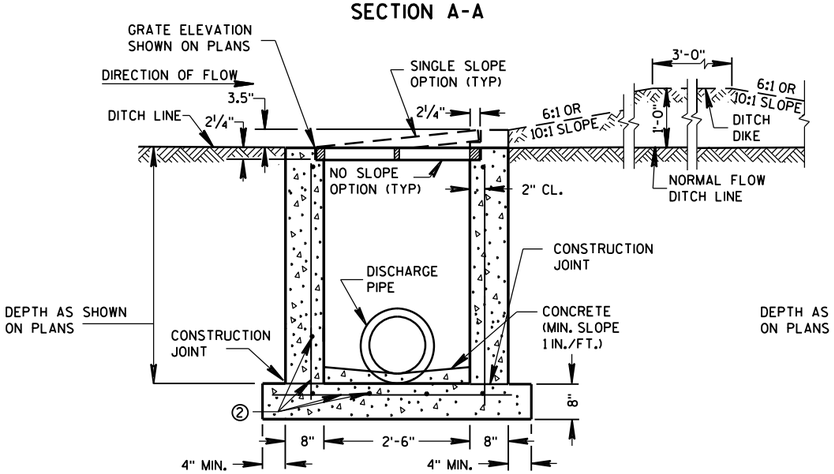

REINFORCED CAST-IN-PLACE CONCRETE SECTION A-A

INLETS MEDIAN 1 GRATE

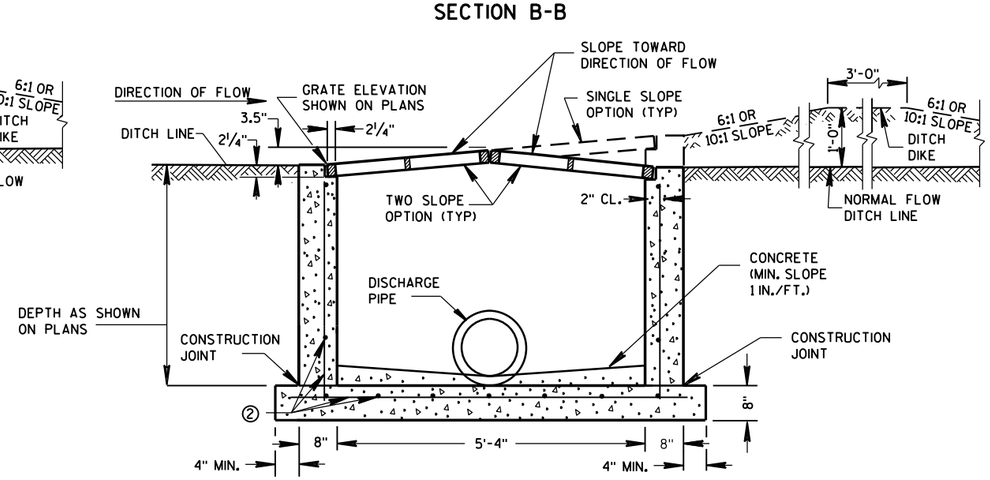

REINFORCED CAST-IN-PLACE CONCRETE SECTION B-B

INLETS MEDIAN 2 GRATE

JOINTS TO BE SEALED WITH A BUTYL RUBBER SEAL PER SEALANT MANUFACTURERS RECOMMENDATIONS CONFORMING TO ASTM C 990 (TYP)

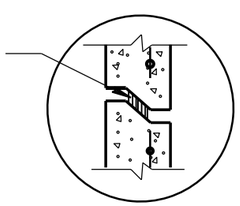

DETAIL "B"

INLETS MEDIAN 1 AND 2 GRATE

STATE OF WISCONSIN
DEPARTMENT OF TRANSPORTATION

APPROVED
Sept., 2016 — DATE
/S/ Rodney Taylor — ROADWAY STANDARDS DEVELOPMENT UNIT SUPERVISOR
FHWA

Inlets Median 1 and 2 Grate

References:

FDM 13-25-30

Bid items associated with this drawing:

ITEM NUMBER	DESCRIPTION	UNIT
611.3901	Inlets Median 1 Grate	EACH
611.3902	Inlets Median 2 Grate	EACH
611.0642	Inlets Cover Type MS	EACH
611.0645	Inlets Cover Type MS-A	EACH

Standardized Special Provisions associated with this drawing:

STSP NUMBER	TITLE
NONE	

Other SDDs associated with this drawing:

SDD 8A5 Inlet cover sheet "b".

Design Notes:

A pipe matrix on the front side of this SDD provides guidance for selecting the maximum inside pipe diameter. The inside pipe diameter was determined by the pipe entering perpendicular to the structure at 90°. Pipes entering as a skewed angle should be evaluated on a case by case basis.

For Inlets Median 1 Grate, the designer must specify the slope of the inlet cover as either single slope or no slope.

For Inlets Median 2 Grate, the designer must specify the slope of the two inlet covers as either single slope, two different slopes or no slope.

Designer must specify either a MS or MS-A inlet cover.

Inlets Median 1 and 2 Grate with MS or MS-A covers shall not be used in paved areas with traffic.

Grates shall be sloped no greater than 10 to 1.

Ditch Dikes shall be sloped at:

6:1 for design speeds less than 60 m.p.h.

10:1 for design speeds greater than or equal to 60 m.p.h.

Contact Person:

Ed Lilla (608) 266-2312

SDD 8d1-a Concrete Curb, Concrete Curb & Gutter

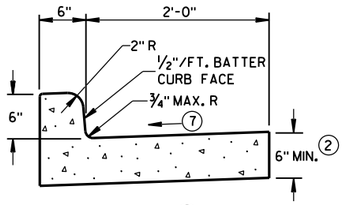

TYPES A[1] & D

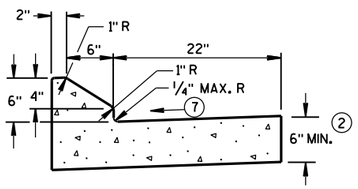

6" SLOPED CURB TYPES G[1] & J

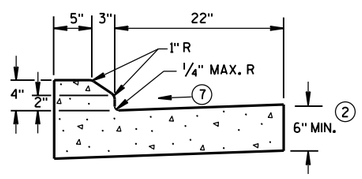

4" SLOPED CURB TYPES G[1] & J

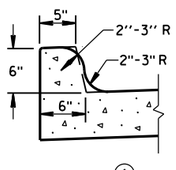

TYPES K[1] & L
(OPTIONAL CURB SHAPE)

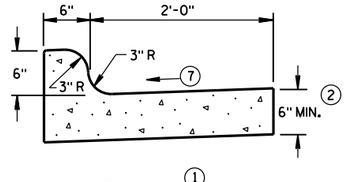

TYPES K[1] & L

CONCRETE CURB & GUTTER 30"

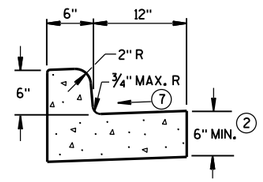

TYPES A[1] & D

CONCRETE CURB & GUTTER 18"

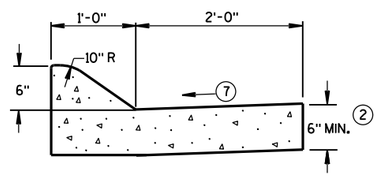

6" SLOPED CURB TYPES A[1] & D

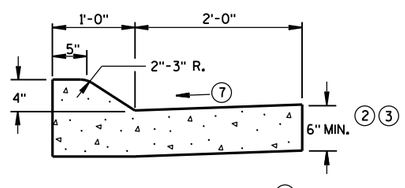

4" SLOPED CURB TYPES A[1] & D

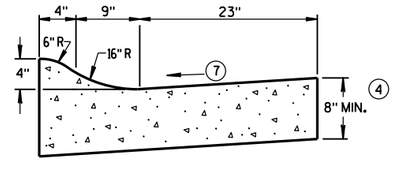

4" SLOPED CURB TYPES R[1] & T[5]

CONCRETE CURB & GUTTER 36"

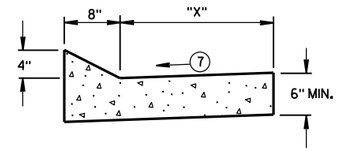

TYPES TBT & TBTT[1]

CONCRETE CURB & GUTTER

TBT & TBTT	"X"
30"	22"
36"	28"

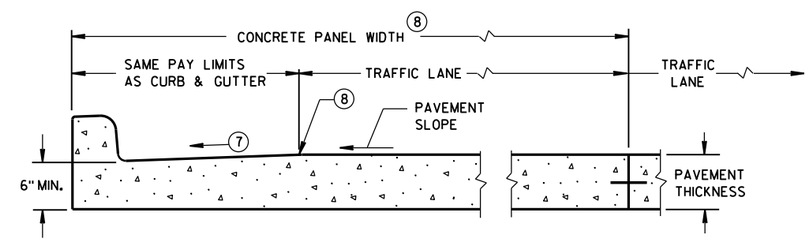

PARTIAL SECTION OF PAVEMENT*
WITH INTEGRAL CURB & GUTTER

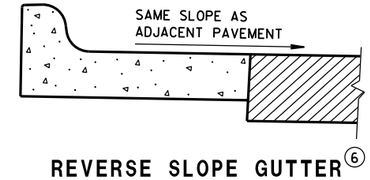

REVERSE SLOPE GUTTER[6]
(TYPICAL FOR ALL CURB & GUTTER TYPES)

GENERAL NOTES

DETAILS OF CONSTRUCTION, MATERIALS AND WORKMANSHIP NOT SHOWN ON THIS DRAWING SHALL CONFORM TO THE PERTINENT REQUIREMENTS OF THE CONTRACT.

PAVEMENT TIES AND TIE BARS SHALL BE EPOXY COATED IN CONFORMANCE WITH SUBSECTION 505.2.6.2 OF THE STANDARD SPECIFICATIONS.

INTEGRAL CURB & GUTTER SHALL CONFORM TO THE DETAILS SHOWN FOR CONCRETE CURB & GUTTER INCLUDING THE TRANSVERSE GUTTER SLOPE.

WHERE THE TRANSVERSE JOINTS IN THE PAVEMENT ARE REQUIRED TO BE SEALED, THE JOINTS IN THE INTEGRAL CURB AND GUTTER SHALL BE SEALED TO THE FACE OF CURB WITH THE SAME TYPE OF SEALANT. THE COST OF FURNISHING AND INSTALLING THIS SEALANT SHALL BE INCIDENTAL TO THE ITEM CONCRETE CURB AND GUTTER.

UNLESS OTHERWISE SHOWN ON THE TYPICAL CROSS SECTIONS, THE BASE AGGREGATE AND COMMON EXCAVATION LIMITS ARE 2'-0" BEHIND THE BACK OF CURBS.

1. TIE BARS ARE REQUIRED FOR CURB AND GUTTER TYPES A, G, K, R AND TBTT.
2. THE BOTTOM OF CURB AND GUTTER MAY BE CONSTRUCTED EITHER LEVEL OR PARALLEL TO THE SLOPE OF THE SUBGRADE OR BASE AGGREGATE PROVIDED A 6" MINIMUM GUTTER THICKNESS IS MAINTAINED.
3. USE 8" MINIMUM GUTTER THICKNESS WHEN USED WITH AN ADJACENT CONCRETE TRUCK APRON PLACED BEHIND BACK OF CURB.
4. THE BOTTOM OF CURB AND GUTTER MAY BE CONSTRUCTED EITHER LEVEL OR PARALLEL TO THE SLOPE OF THE SUBGRADE OR BASE AGGREGATE PROVIDED A 8" MINIMUM GUTTER THICKNESS IS MAINTAINED.
5. THE FACE OF CURB IS 6" FROM THE BACK OF CURB.
6. WHEN REVERSE SLOPE GUTTER IS REQUIRED, THE LOCATION(S) WILL BE SHOWN ELSEWHERE IN THE PLAN.
7. USE 4% GUTTER CROSS SLOPE UNLESS OTHERWISE NOTED IN THE PLANS.
8. INCLUDE LONGITUDINAL JOINT AND TIE BARS ALONG LANE EDGE WHEN CONCRETE PANEL WIDTH EXCEEDS THE MAXIMUM WIDTH PER TABLE BELOW. LONGITUDINAL JOINT(S) ARE NOT ALLOWED WITHIN TRAFFIC LANES AND BIKE LANES. LONGITUDINAL JOINT MAY BE SAWED.

PAVEMENT THICKNESS AND MAXIMUM CONCRETE PANEL WIDTH TABLE

PAVEMENT THICKNESS	MAXIMUM PANEL WIDTH
LESS THAN 10"	12'
10" & ABOVE	15'

* BIKE LANE IS NOT SHOWN.

CONCRETE CURB & GUTTER

STATE OF WISCONSIN
DEPARTMENT OF TRANSPORTATION

GENERAL NOTES

DETAILS OF CONSTRUCTION, MATERIALS AND WORKMANSHIP NOT SHOWN ON THIS DRAWING SHALL CONFORM TO THE PERTINENT REQUIREMENTS OF THE CONTRACT.

PAVEMENT TIES AND TIE BARS SHALL BE EPOXY COATED IN CONFORMANCE WITH SUBSECTION 505.2.6.2 OF THE STANDARD SPECIFICATIONS.

UNLESS OTHERWISE SHOWN ON THE TYPICAL CROSS SECTIONS, THE BASE AGGREGATE AND COMMON EXCAVATION LIMITS ARE 2'-0" BEHIND THE BACK OF CURBS.

(1) TIE BARS ARE REQUIRED FOR CURB AND GUTTER TYPES A, G, K, R AND TBTT.

(2) THE BOTTOM OF CURB AND GUTTER MAY BE CONSTRUCTED EITHER LEVEL OR PARALLEL TO THE SLOPE OF THE SUBGRADE OR BASE AGGREGATE PROVIDED A 6" MINIMUM GUTTER THICKNESS IS MAINTAINED.

(9) REFER TO SDD 8D18 AND SDD 8D19 FOR ADDITIONAL DRIVEWAY ENTRANCE CURB DETAILS.

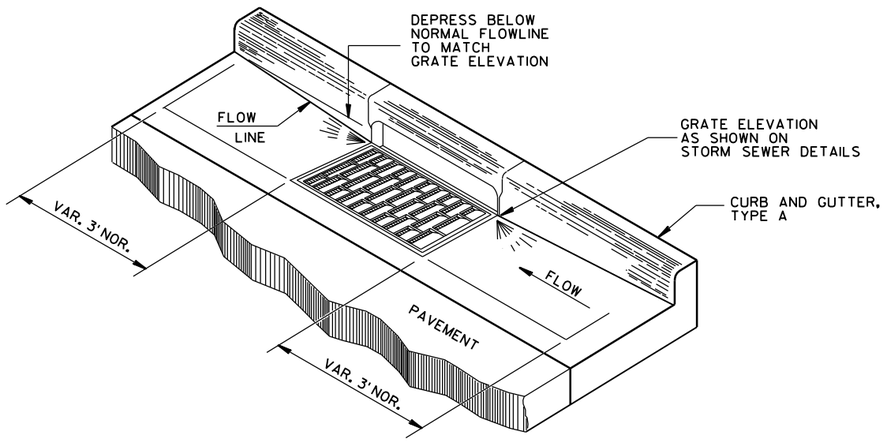

DETAIL OF CURB AND GUTTER AT INLETS

(TYPE H INLET COVER SHOWN)

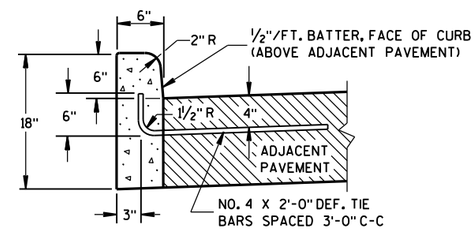

TYPES A (1) & D

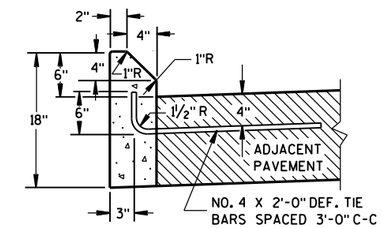

TYPES G (1) & J

CONCRETE CURB

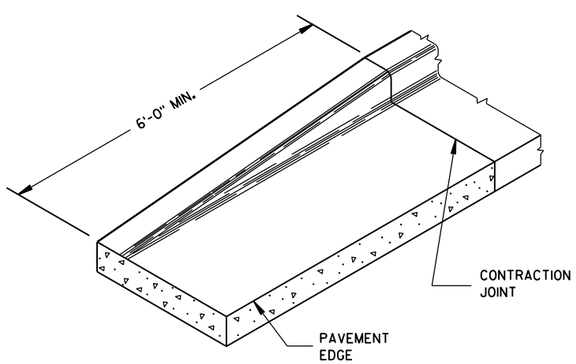

END SECTION CURB & GUTTER

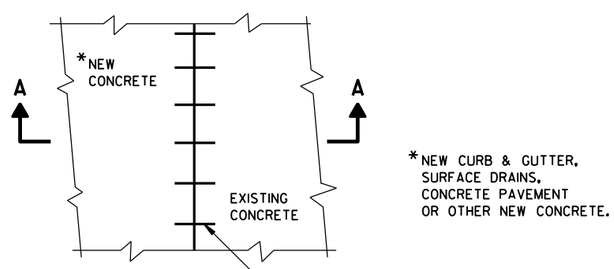

*NEW CURB & GUTTER, SURFACE DRAINS, CONCRETE PAVEMENT OR OTHER NEW CONCRETE.

PLAN VIEW

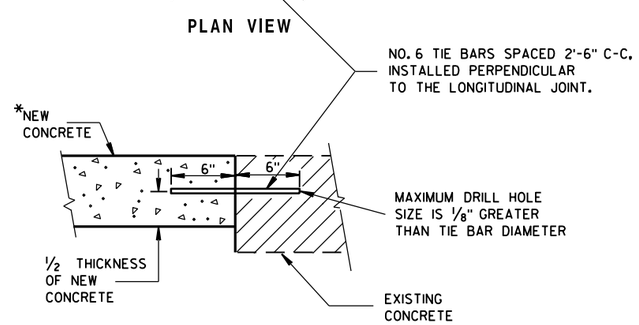

SECTION A-A

TIE BARS DRILLED INTO EXISTING PAVEMENT

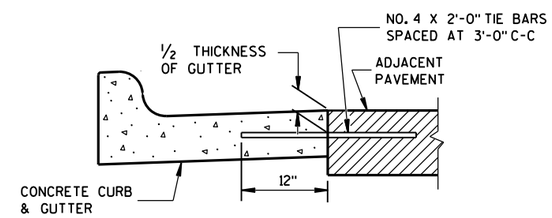

TYPICAL TIE BAR LOCATION (1)

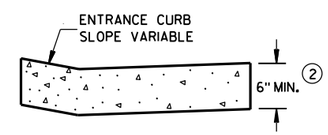

DRIVEWAY ENTRANCE CURB (9)

(WHEN DIRECTED BY THE ENGINEER)

CONCRETE CURB, TIES AND CURB AND GUTTER APPLICATIONS

STATE OF WISCONSIN
DEPARTMENT OF TRANSPORTATION

APPROVED
June, 2017 — DATE
/S/ Rodney Taylor — ROADWAY STANDARDS DEVELOPMENT UNIT SUPERVISOR
FHWA

6
S.D.D. 8 D 1-20b

Concrete Curb, Concrete Curb & Gutter and Ties

References:

FDM 11-20-1

Bid items associated with this drawing:

ITEM NUMBER	DESCRIPTION	UNIT
416.0610	Drilled Ties Bars	EACH
601.0105	Concrete Curb Type A	LF
601.0110	Concrete Curb Type D	LF
601.0115	Concrete Curb Type G	LF
601.0120	Concrete Curb Type J	LF
601.0150	Concrete Curb Integral Type D	LF
601.0155	Concrete Curb Integral Type J	LF
601.0405	Concrete Curb & Gutter 18-Inch Type A	LF
601.0407	Concrete Curb & Gutter 18-Inch Type D	LF
601.0409	Concrete Curb & Gutter 30-Inch Type A	LF
601.0411	Concrete Curb & Gutter 30-Inch Type D	LF
601.0413	Concrete Curb & Gutter 6-Inch Sloped 30-Inch Type G	LF
601.0415	Concrete Curb & Gutter 6-Inch Sloped 30-Inch Type J	LF
601.0417	Concrete Curb & Gutter 30-Inch Type K	LF
601.0419	Concrete Curb & Gutter 30-Inch Type L	LF
601.0452	Concrete Curb & Gutter Integral 30-Inch Type D	LF
601.0454	Concrete Curb & Gutter Integral 30-Iinch Type J	LF
601.0456	Concrete Curb & Gutter Integral 30-Inch Type L	LF
601.0501	Concrete Curb & Gutter Integral 4-Inch Sloped 36-Inch	LF
601.0511	Concrete Curb & Gutter Integral 6-Inch Sloped 36-Inch	LF
601.0551	Concrete Curb & Gutter 4-Inch Sloped 36-Inch Type A	LF
601.0553	Concrete Curb & Gutter 4-Inch Sloped 36-Inch Type D	LF
601.0555	Concrete Curb & Gutter 6-Inch Sloped 36-Inch Type A	LF
601.0557	Concrete Curb & Gutter 6-Inch Sloped 36-Inch Type D	LF
601.0574	Concrete Curb & Gutter 4-Inch Sloped 30-Inch Type G	LF
601.0576	Concrete Curb & Gutter 4-Inch Sloped 30-Inch Type J	LF
601.0580	Concrete Curb & Gutter 4-Inch Sloped 36-Inch Type R	LF
601.0582	Concrete Curb & Gutter 4-Inch Sloped 36-Inch Type T	LF
601.0584	Concrete Curb & Gutter 4-Inch Sloped 30-Inch Type TBT	LF
601.0586	Concrete Curb & Gutter 4-Inch Sloped 30-Inch Type TBTT	LF
601.0588	Concrete Curb & Gutter 4-Inch Sloped 36-Inch Type TBT	LF
601.0590	Concrete Curb & Gutter 4-Inch Sloped 36-Inch Type TBTT	LF

Standardized Special Provisions associated with this drawing:

STSP NUMBER	TITLE
NONE	

Other SDDs associated with this drawing:

NONE

Design Notes:

Any special curb or curb and gutter, different from those listed above, requires a SPV.0900 item number, special provision and special detail.

List in miscellaneous quantities all curb and curb and gutter types along with STA-STA limits LT and RT. Label typical finished sections with curb and curb and gutter types. Indicate on plan sheets where reverse slope gutter is required.

A 4% gutter cross slope is the standard slope. The longstanding 3/4” per foot (= 6.25%) cross slope may still be used for various applications. Refer to FDM 11-20-1.2.1.1 for gutter cross slope selection and plan labeling criteria. Also refer to FDM 11-46-10.3 for gutter cross slope guidance with curb ramp applications. Provide inlet spacing for selected gutter cross slope per FDM 13-25-15. Provide construction detail if project requires modification to the standard gutter cross slope.

The face of curb for the Type R and T is 6-inches from the back of curb.

Use the end section curb & gutter at railroad crossings where curb & gutter is present and at driveways where the sidewalk is adjacent to the back of curb.

Curb and gutter Type TBT (Thrie Beam Transition) and TBTT (Thrie Beam Transition Tied) can be used with thrie beam transitions to control water by the thrie beam transition. See the Thrie Beam Transition SDDs for more information. In some cases, TBT and TBTT are required for proper performance of the thrie beam transition.

Note:

Do not use this SDD for Items 601.0199.s Concrete Curb Precast or 465.0310 Asphaltic Curb. Always include a special detail in the plan for these items. (See CADDS cell 9 or 10 in file CDCRBFTR.CEL and modify titles to match that of item 465.0310.)

Contact Person:

Ann-Marie Kirsch (608) 267-3766

INLET COVERS

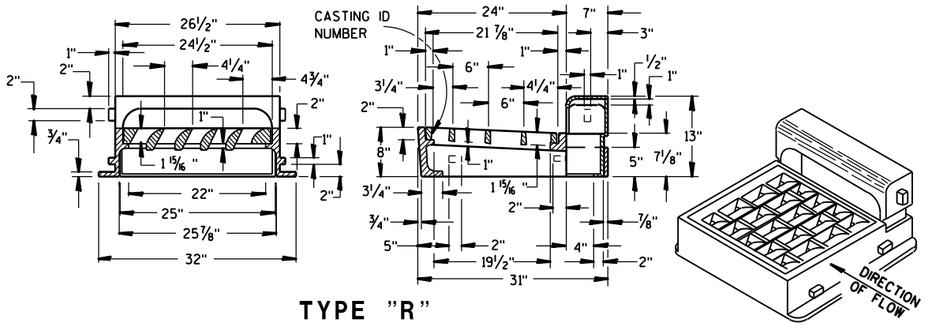

TYPE "R"

SHOWING SPECIAL GRATE NO. 1
(TO BE NOTED AS R-1 IN DRAINAGE TABLE)

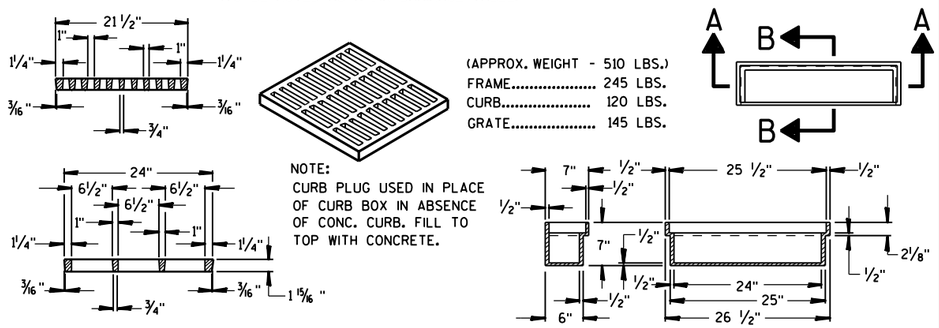

(APPROX. WEIGHT - 510 LBS.)
FRAME..... 245 LBS.
CURB..... 120 LBS.
GRATE..... 145 LBS.

NOTE:
CURB PLUG USED IN PLACE OF CURB BOX IN ABSENCE OF CONC. CURB. FILL TO TOP WITH CONCRETE.

SECTION B-B SECTION A-A

GRATE FOR TYPE "R" INLET COVER

(GRATE.....150 LBS.)
(TO BE USED UNLESS OTHERWISE NOTED IN DRAINAGE TABLE)

SPECIAL CURB PLUG "P"

(CURB PLUG.....85 LBS.)
(TO BE NOTED AS R-P IN DRAINAGE TABLE)

'H' = 9" FOR 6" CURB
'H' = 11" FOR 8" CURB
'G' = 13 ¾" FOR 6" CURB
'G' = 15 ¾" FOR 8" CURB

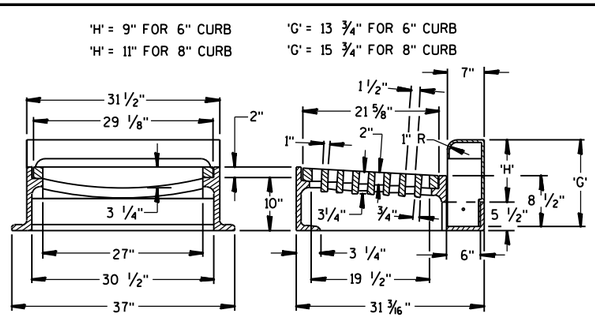

TYPE "W"

(APPROX. WEIGHT - 670 LBS.)
FRAME..... 350 LBS.
CURB BOX..... 135 LBS.
GRATE..... 185 LBS.

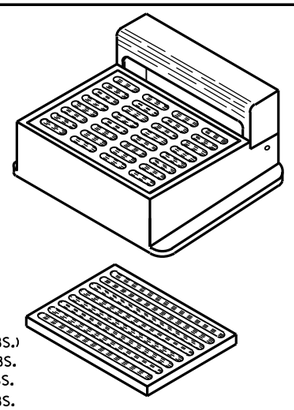

ALTERNATE GRATE

(FOR EXPRESSWAY RAMPS)

TYPES "W" & "X"

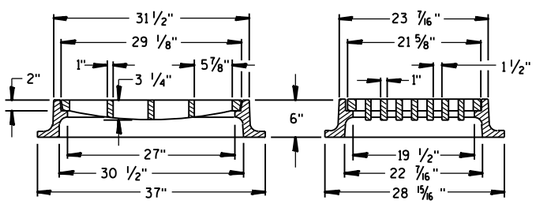

TYPE "X"

(APPROX. WEIGHT - 470 LBS.)

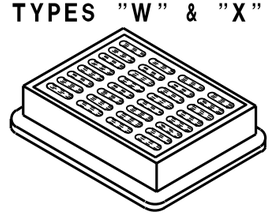

MANHOLE COVER

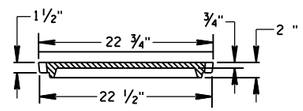

SECTION C-C

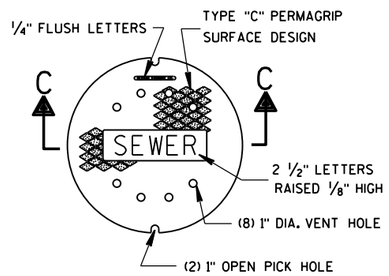

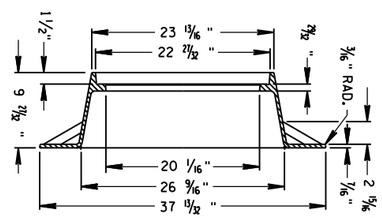

TYPE "Q"

(APPROX. WEIGHT - 290 LBS.)

TABLE OF DIMENSIONS

TYPE	'A'	'B'	'C'
11	3'-6"	2'-8"	12" - 36"*
12	4'-0"	3'-8"	12" - 42"**
13	5'-0"	5'-8"	42" - 48"
14	6'-0"	7'-8"	54" - 60"

* 12" - 21" FOR PRECAST MANHOLES
** 12" - 24" FOR PRECAST MANHOLES

THE FIRST STEP SHALL BE PLACED 16" ABOVE THE BENCH.

MANHOLE

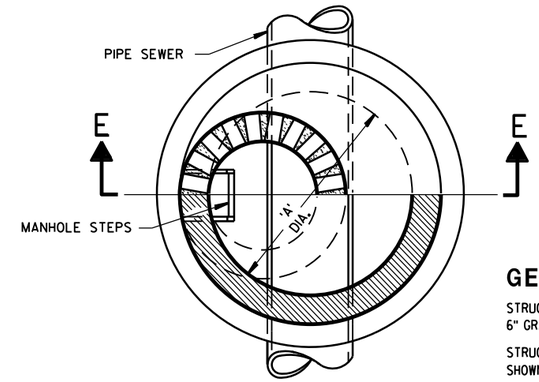

HALF SECTION D-D

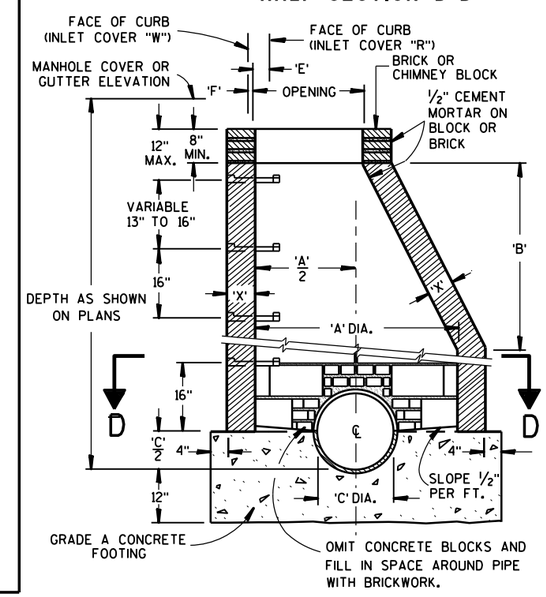

SECTION E-E

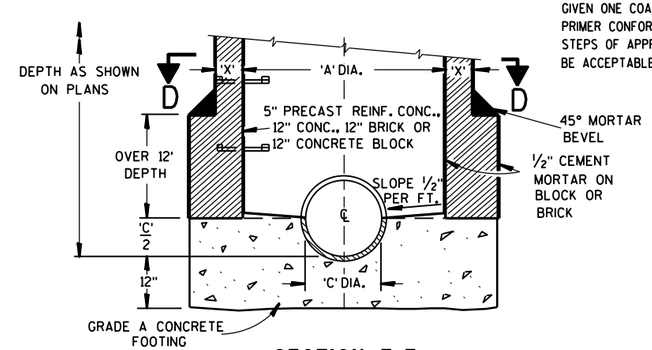

SECTION E-E

TYPES 11, 12, 13 & 14

TABLE OF OPENING DIMENSIONS

COVER TYPE	COVER DESCRIPTION	OPENING	'E'	'F'
"O"	ROUND	2'-2" DIA.	—	—
"W"	CURB BOX	1'-8" X 2'-6"	—	1"
"X"	INLET	1'-10" X 2'-6"	—	—
"R"	CURB BOX	2'-0" X 2'-1"	4"	—

GENERAL NOTES

STRUCTURE WALL THICKNESS 'X' TO BE 8" BRICK, 6" CONCRETE BLOCK, 6" GRADE A CONCRETE OR 5" PRECAST REINFORCED CONCRETE.

STRUCTURE FOOTINGS ARE TO BE GRADE A CONCRETE OF THE THICKNESS SHOWN IN THE DETAIL OR 5" PRECAST REINFORCED CONCRETE.

REINFORCEMENT FOR 5" PRECAST REINFORCED CONCRETE SHALL BE 6" X 6" W16 X W16 WELDED SREEL WIRE FABRIC AND SHALL BE EMBEDDED 2" CLEAR.

PRECAST INLET UNITS AND BASES SHALL CONFORM TO THE PERTINENT REQUIREMENTS OF AASHTO DESIGNATION M 199.

PRECAST CONCRETE FLAT SLAB TOPS MAY BE USED ON THE STRUCTURES. THE TOPS SHALL BE INSTALLED ON A BED OF MORTAR.

PRECAST REINFORCED BASES SHALL BE PLACED ON A BED OF MATERIAL AT LEAST 6" IN DEPTH, WHICH MEETS THE REQUIREMENTS FOR GRANULAR BACK-FILL. THIS BEDDING SHALL BE COMPACTED AND PROVIDE UNIFORM SUPPORT FOR THE ENTIRE AREA OF THE BASE.

SET FRAME ELEVATION 0.03 FT. LOWER THAN ELEVATION INDICATED ON THE PLANS.

THE CONTRACTOR MAY FORM AND POUR MONOLITHIC CONCRETE INVERT PROVIDED THE PIPE ENDS ARE EXTENDED INTO THE M.H. AND NOT TERMINATED WITHIN THE M.H. WALLS.

MANHOLE STEPS

STEPS MEETING THE FOLLOWING REQUIREMENTS SHALL BE INSTALLED IN ALL STRUCTURES OVER 5 FEET IN DEPTH; 16 INCH C-C MAX. SPACING; PROJECT A MINIMUM CLEAR DISTANCE OF 4 INCHES FROM THE WALL AT THE POINT OF EMBEDMENT; MINIMUM WALL EMBEDMENT OF 3 INCHES IN PRECAST MANHOLE AND 6 INCHES IN 8 INCH BRICK OR 6 INCH BLOCK MANHOLE; TREAD OF STEP SHALL HAVE A NON-SKID SURFACE AND BE FLANKED BY CLEATS, WITH A MINIMUM OF 10 INCHES CLEAR BETWEEN CLEATS, TO PREVENT FOOT SLIPPING OFF THE EDGE CLEATS SHALL BE A MINIMUM OF ¾ INCH HIGH BY ¾ INCH WIDE HAVING A MINIMUM THICKNESS OF ⅜ INCH. STEPS SHALL BE CAPABLE OF SUPPORTING A CONCENTRATED LOAD OF 300 LBS. FERROUS METAL STEPS NOT PAINTED OR TREATED TO RESIST CORROSION SHALL HAVE A MINIMUM CROSS SECTIONAL DIMENSION OF 1 INCH.

SOLID ALUMINUM STEPS SHALL HAVE A MINIMUM CROSS SECTIONAL DIMENSION OF 0.75 INCH. ALUMINUM SURFACES TO BE EMBEDDED IN CONCRETE SHALL BE GIVEN ONE COAT OF SUITABLE QUALITY PAINT, SUCH AS ZINC CHROMATE PRIMER CONFORMING TO FEDERAL SPECIFICATION TT-P-645 OR EQUIVALENT. STEPS OF APPROVED POLYPROPYLENE PLASTIC COATED REINFORCING BAR WILL BE ACCEPTABLE.

MANHOLES, MANHOLE & INLET COVERS

STATE OF WISCONSIN
DEPARTMENT OF TRANSPORTATION

APPROVED
4/12/2011 — DATE
/S/ Jerry H. Zogg — ROADSIDE STANDARDS DEVELOPMENT ENGINEER
FHWA

References:

FDM 13-25-30

Neenah Foundry Company Catalog "Construction Castings"

Bid items associated with this drawing:

ITEM NUMBER	DESCRIPTION	UNIT
611.0225	Manholes Type 11	EACH
611.0230	Manholes Type 12	EACH
611.0235	Manholes Type 13	EACH
611.0240	Manholes Type 14	EACH
611.0555	Manhole Covers Type Q	EACH
611.0657	Inlet Covers Type W	EACH
611.0663	Inlet Covers Type X	EACH
601.0648	Inlet Covers Type R	EACH

Standardized Special Provisions associated with this drawing:

STSP NUMBER	TITLE
NONE	

Other SDDs associated with this drawing:

NONE

Design Notes:

This SDD replaces SDD 8M3-5. It is for use in Milwaukee County only. This includes the City of Milwaukee and other communities in Milwaukee County.

When special grate No. 1 is needed for Type R Inlet Covers, bid as Type R but show as R-1 in drainage table. Special curb plug "P" should be shown as R-P in drainage table, but is bid as Type R.

Contact Person:

Ann-Marie Kirsch (608) 267-3766

METAL APRON ENDWALLS

PIPE DIA. (IN.)	MIN. THICK. (Inches) STEEL	MIN. THICK. (Inches) ALUM.	DIMENSIONS (Inches) A (±1")	B (MAX.)	H (±1")	L (±1 1/2")	L1 ①	L2 ①	W (±2")	APPROX. SLOPE	BODY
12	.064	.060	6	6	6	21	12	17 1/2	24	2 1/2 to 1	1 Pc.
15	.064	.060	7	8	6	26	14	21 3/4	30	2 1/2 to 1	1 Pc.
18	.064	.060	8	10	6	31	15	28 1/4	36	2 1/2 to 1	1 Pc.
21	.064	.060	9	12	6	36	18	29 5/8	42	2 1/2 to 1	1 Pc.
24	.064	.075	10	13	6	41	18	37 1/4	48	2 1/2 to 1	1 Pc.
30	.079	.075	12	16	8	51	18	52 1/4	60	2 1/2 to 1	1 Pc.
36	.079	.105	14	19	9	60	24	59 3/4	72	2 1/2 to 1	2 Pc.
42	.109	.105	16	22	11	69	24	75 5/8	84	2 1/2 to 1	2 Pc.
48	.109	.105	18	27	12	78	24	81	90	2 1/4 to 1	3 Pc.
54	.109	.105	18	30	12	84	30	85 1/2	102	2 1/4 to 1	3 Pc.
60	.109×	.105×	18	33	12	87	—	—	114	2 to 1	3 Pc.
66	.109×	.105×	18	36	12	87	—	—	120	2 to 1	3 Pc.
72	.109×	.105×	18	39	12	87	—	—	126	2 to 1	3 Pc.
78	.109×	.105×	18	42	12	87	—	—	132	1 1/2 to 1	3 Pc.
84	.109×	.105×	18	45	12	87	—	—	138	1 1/2 to 1	3 Pc.
90	.109×	.105×	18	37	12	87	—	—	144	1 1/2 to 1	3 Pc.
96	.109×	.105×	18	35	12	87	—	—	150	1 1/2 to 1	3 Pc.

× EXCEPT CENTER PANEL
SEE GENERAL NOTES

REINFORCED CONCRETE APRON ENDWALLS

PIPE DIA. (IN.)	DIMENSIONS (Inches) T	A	B	C	D	E	G	APPROX. SLOPE
12	2	4	24	48 7/8	72 7/8	24	2	3 to 1
15	2 1/4	6	27	46	73	30	2 1/4	3 to 1
18	2 1/2	9	27	46	73	36	2 1/2	3 to 1
21	2 3/4	9	36	37 1/2	73 1/2	42	2 3/4	3 to 1
24	3	9 1/2	43 1/2	30	73 1/2	48	3	3 to 1
27	3 1/4	10 1/2	49 1/2	24	73 1/2	54	3 1/4	3 to 1
30	3 1/2	12	54	19 3/4	73 1/2	60	3 1/2	3 to 1
36	4	15	63	34 3/4	97 3/4	72	4	3 to 1
42	4 1/2	21	63	35	98	78	4 1/2	3 to 1
48	5	24	72	26	98	84	5	3 to 1
54	5 1/2	27	65	*33 1/4-**35	*98 1/4-**100	90	5 1/2	2 2/5 to 1
60	6	*30-**35	60	39	99	96	5	2 to 1
66	6 1/2	*24-**30	*72-**78	*21-**27	99	102	5 1/2	2 to 1
72	7	*24-**36	78	21	99	108	6	2 to 1
78	7 1/2	*24-**36	78	21	99	114	6 1/2	2 to 1
84	8	36	90 1/2	21	111 1/2	120	6 1/2	1 1/2 to 1
90	8 1/2	41	87 1/2	24	111 1/2	132	6 1/2	1 1/2 to 1

*MINIMUM
**MAXIMUM

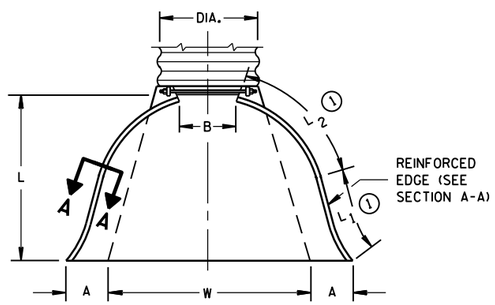

PLAN VIEW

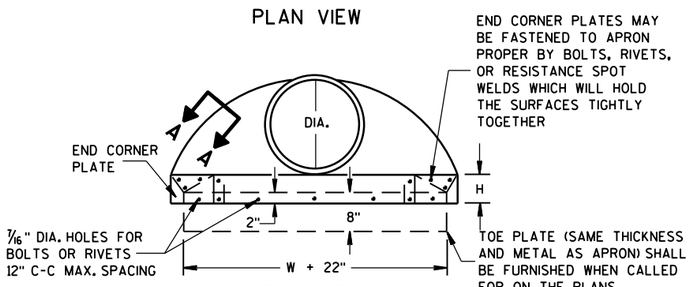

END VIEW

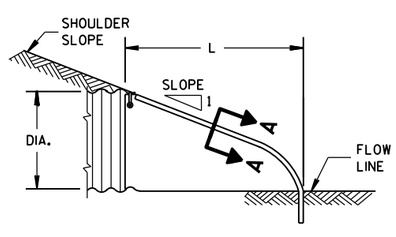

SIDE ELEVATION

METAL ENDWALLS

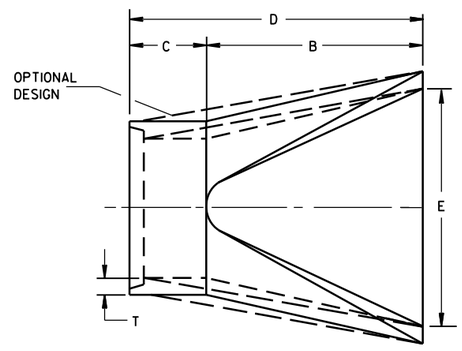

PLAN

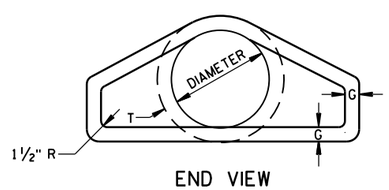

END VIEW

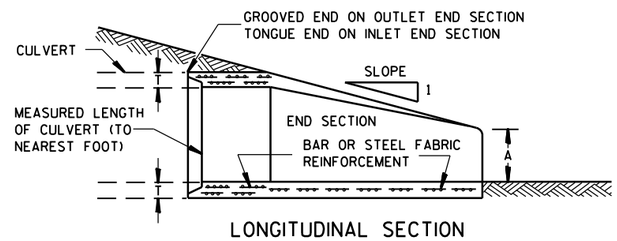

LONGITUDINAL SECTION

CONCRETE ENDWALLS

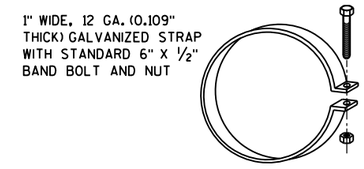

ALTERNATE FOR TYPE 1 CONNECTION

END SECTION CONNECTOR STRAP

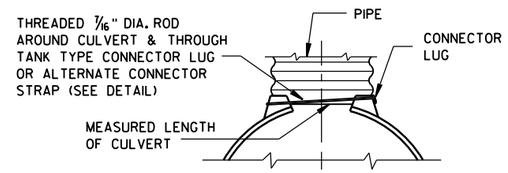

TYPE 1
FOR 12" THRU 24" CORR. PIPE

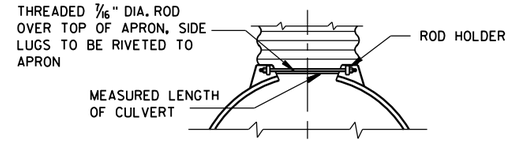

TYPE 2
FOR 30" THRU 96" CORR. PIPE

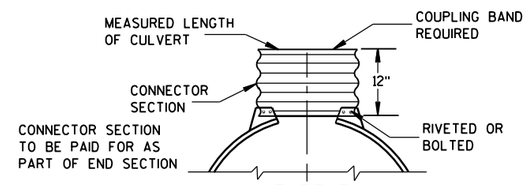

TYPE 3
FOR 42" THRU 96" CORR. PIPE

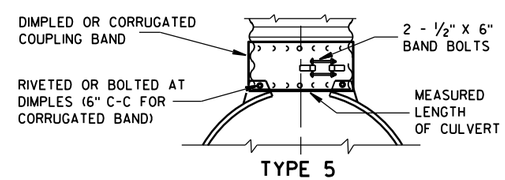

TYPE 5
ALTERNATE FOR:
ALL SIZES CORRUGATED CIRCULAR PIPE

NOTE: DIMPLED BAND FITS OVER OUTSIDE OF ENDWALL, AND CORRUGATED BAND FITS INSIDE ENDWALL. DIMPLED BAND MAY BE USED WITH HELICALLY CORRUGATED PIPE.

FOR CIRCUMFERENTIALLY CORRUGATED PIPE USE ENDWALL CONNECTION DETAILS 1, 2, 3 OR 5 AS APPLICABLE.

FOR HELICALLY CORRUGATED PIPE USE ENDWALL CONNECTION DETAILS 1, 2 OR 5.

FOR HELICALLY CORRUGATED PIPES WITH TWO CIRCUMFERENTIAL CORRUGATIONS AT EACH END USE ENDWALL CONNECTION DETAILS 1, 2 OR 3.

CONNECTION DETAILS

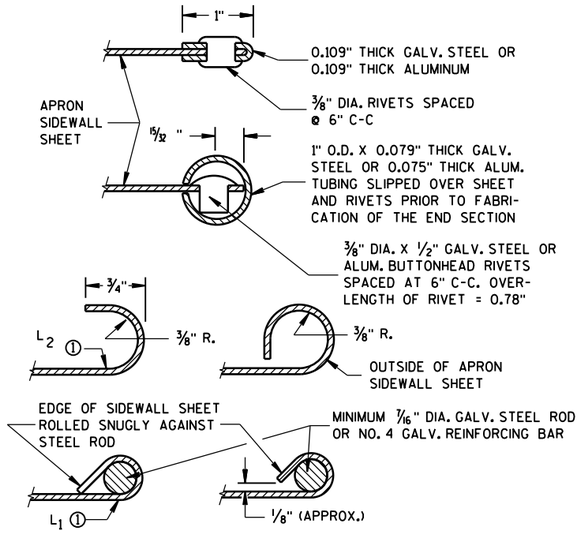

SECTION A-A

GENERAL NOTES

DETAILS OF CONSTRUCTION, MATERIALS AND WORKMANSHIP NOT SHOWN ON THIS DRAWING SHALL CONFORM TO THE PERTINENT REQUIREMENTS OF THE STANDARD SPECIFICATIONS AND THE APPLICABLE SPECIAL PROVISIONS.

CONCRETE CULVERT ENDWALLS MAY NOT BE USED WITH GALVANIZED STEEL OR ALUMINUM CULVERT PIPE OR VISE VERSA. GALVANIZED STEEL OR ALUMINUM ENDWALLS SHALL NORMALLY BE INSTALLED ON CULVERT PIPE OF THE SAME METAL.

ALL THREE PIECE STEEL APRON ENDWALLS FOR 60" DIAMETER PIPE AND LARGER SHALL HAVE 0.109" SIDES AND 0.138" CENTER PANELS. ALL THREE PIECE ALUMINUM APRON ENDWALLS FOR 60" DIAMETER PIPE AND LARGER SHALL HAVE 0.105" SIDES AND 0.134" CENTER PANELS. THE WIDTH OF CENTER PANELS SHALL BE GREATER THAN 20 PERCENT OF THE PIPE PERIMETER.

LAP SEAMS SHALL BE TIGHTLY JOINED BY GALVANIZED RIVETS OR BOLTS FOR STEEL UNITS AND ALUMINUM RIVETS AND BOLTS FOR ALUMINUM UNITS. FOR THE 60" THROUGH 96" DIAMETER APRON ENDWALL SIZES, THE REINFORCED EDGES AND CENTER PANEL SEAMS SHALL BE FURTHER REINFORCED WITH GALVANIZED STEEL OR ALUMINUM STIFFENER ANGLES. THE ANGLES SHALL BE ATTACHED BY GALVANIZED NUTS AND BOLTS FOR STEEL UNITS AND ALUMINUM NUTS AND BOLTS FOR ALUMINUM UNITS.

WHERE TWO OR MORE PIPES WITH APRON ENDWALLS ARE LAID ADJACENT TO EACH OTHER, THEY SHALL BE SEPARATED BY A DISTANCE SUFFICIENT TO PROVIDE A MINIMUM CLEARANCE OF 6 INCHES BETWEEN APRON ENDWALLS.

① FOR PIPE SIZES UP TO 60" DIAMETER, A 180° ROLLED EDGE MAY BE USED INSTEAD OF STEEL ROD REINFORCEMENT. SEE SECTION A-A.

APRON ENDWALLS FOR CULVERT PIPE

STATE OF WISCONSIN
DEPARTMENT OF TRANSPORTATION

APPROVED
8-30-94 — DATE
/S/ Rory L. Rhinesmith — CHIEF ROADWAY DEVELOPMENT ENGINEER
FHWA

Version 11	**Standard Detail Drawing 8f1**	*July 28, 2011*

Apron Endwalls for Culvert Pipe

References:

FDM 19-15-70
FDM 13-1-15
FDM 13-1-17

Bid items associated with this drawing:

ITEM NUMBER	DESCRIPTION	UNIT
520.1000 - 1199	Apron Endwalls for Culvert Pipe (size)	EACH
521.1000 - 1199	Apron Endwalls for Culvert Pipe Steel (size)	EACH
522.1000 - 1199	Apron Endwalls for Culvert Pipe Reinforced Concrete (size)	EACH
525.0300 - 0399	Apron Endwalls for Culvert Pipe Aluminum (size)	EACH

Standardized Special Provisions associated with this drawing:

STSP NUMBER	TITLE

SPV.0060 if non-standard size is specified.

Other SDDs associated with this drawing:

SDD 8F4 Joint Ties for Concrete Pipe

Design Notes:

Joint ties are required for the apron endwall and the last 2 sections of culvert and storm sewer pipe installations. See Standard Specifications.

Contact Person:

Ed Lilla (608) 266-2312

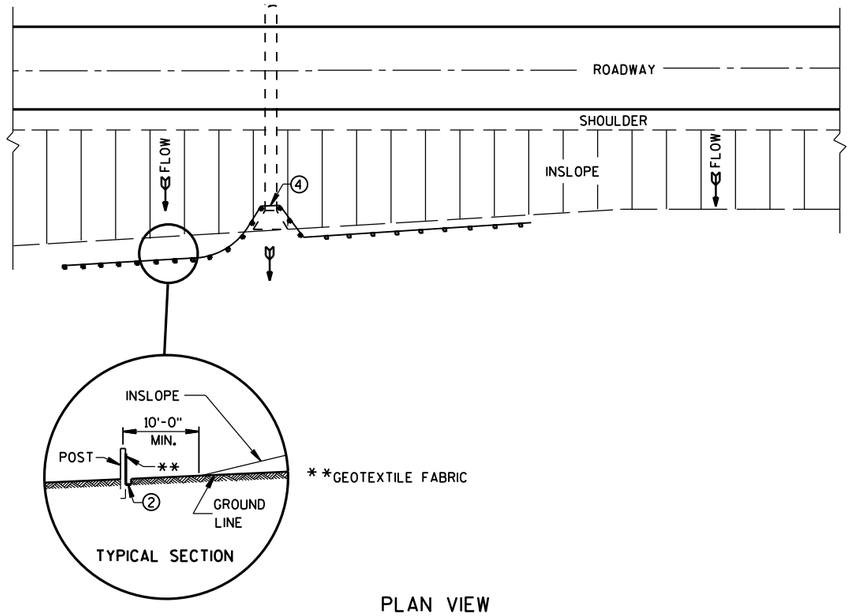

PLAN VIEW

TYPICAL APPLICATION OF SILT FENCE

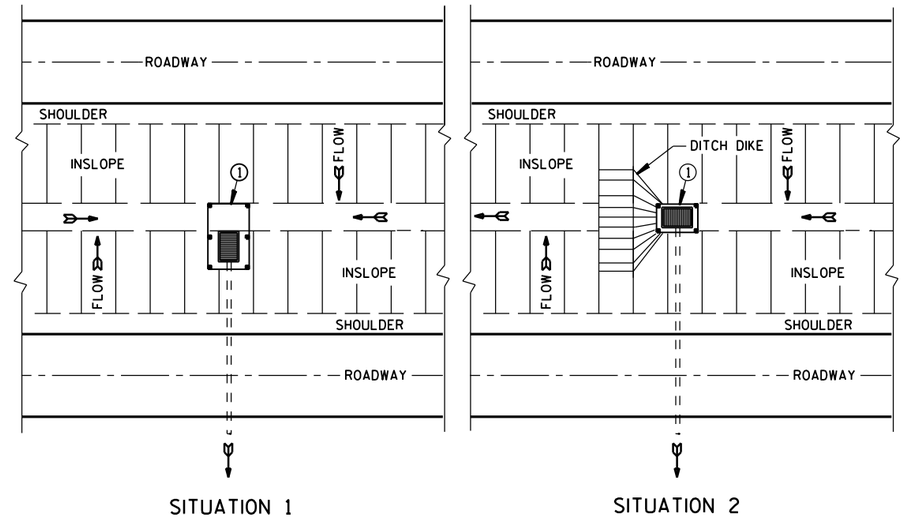

PLAN VIEW

SILT FENCE AT MEDIAN SURFACE DRAINS

GENERAL NOTES

DETAILS OF CONSTRUCTION NOT SHOWN ON THIS DRAWING SHALL CONFORM TO THE PERTINENT REQUIREMENTS OF THE STANDARD SPECIFICATIONS AND APPLICABLE SPECIAL PROVISIONS.

① HORIZONTAL BRACE REQUIRED WITH 2" X 4" WOODEN FRAME OR EQUIVALENT AT TOP OF POSTS.

② FOR MANUAL INSTALLATIONS THE TRENCH SHALL BE A MINIMUM OF 4" WIDE & 6" DEEP TO BURY AND ANCHOR THE GEOTEXTILE FABRIC. FOLD MATERIAL TO FIT TRENCH AND BACKFILL & COMPACT TRENCH WITH EXCAVATED SOIL.

③ WOOD POSTS SHALL BE A MINIMUM SIZE OF 1⅛" X 1⅛" OF OAK OR HICKORY.

④ SILT FENCE TO EXTEND ACROSS THE TOP OF THE PIPE.

⑤ CONSTRUCT SILT FENCE FROM A CONTINUOUS ROLL IF POSSIBLE BY CUTTING LENGTHS TO AVOID JOINTS. IF A JOINT IS NECESSARY USE ONE OF THE FOLLOWING TWO METHODS; A) OVERLAP THE END POSTS AND TWIST, OR ROTATE, AT LEAST 180 DEGREES, B) HOOK THE END OF EACH SILT FENCE LENGTH.

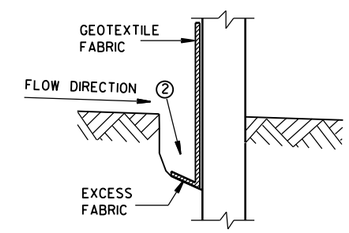

TRENCH DETAIL

NOTE: ADDITIONAL POST DEPTH OR TIE BACKS MAY BE REQUIRED IN UNSTABLE SOILS

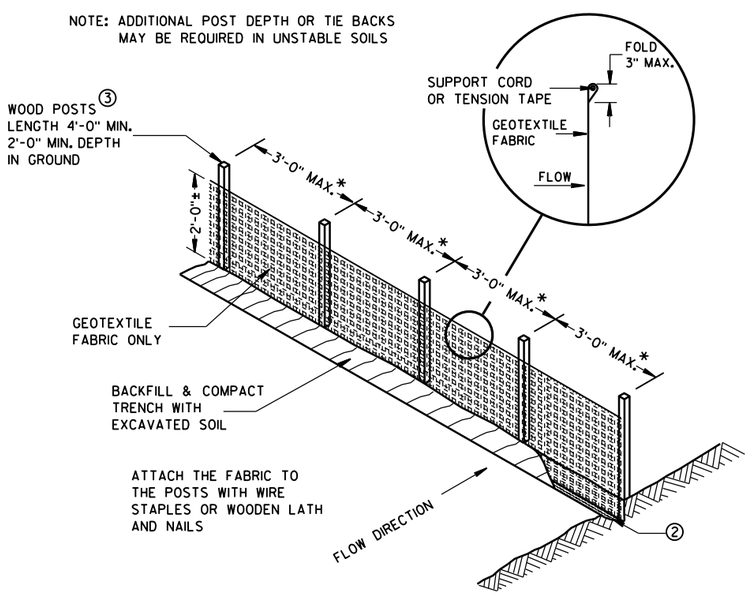

*NOTE: 8'-0" POST SPACING ALLOWED IF A WOVEN GEOTEXTILE FABRIC IS USED.

SILT FENCE

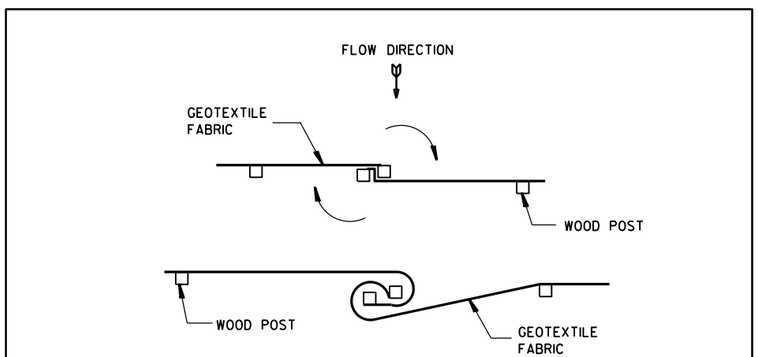

TWIST METHOD

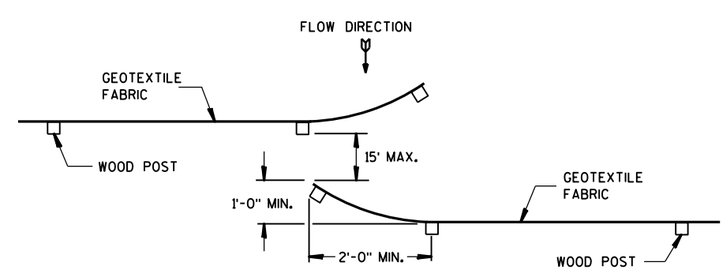

HOOK METHOD

JOINING TWO LENGTHS OF SILT FENCE ⑤

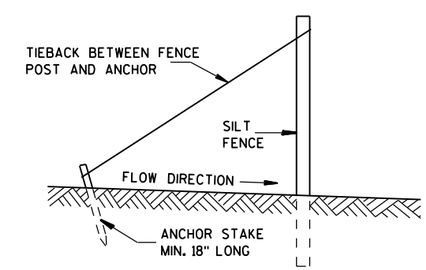

SILT FENCE TIE BACK

(WHEN REQUIRED BY THE ENGINEER)

SILT FENCE

STATE OF WISCONSIN
DEPARTMENT OF TRANSPORTATION

APPROVED
4-29-05 /S/ Beth Cannestra
DATE CHIEF ROADWAY DEVELOPMENT ENGINEER
FHWA

SDD 8e10 Inlet Protection Type A, B, C and D

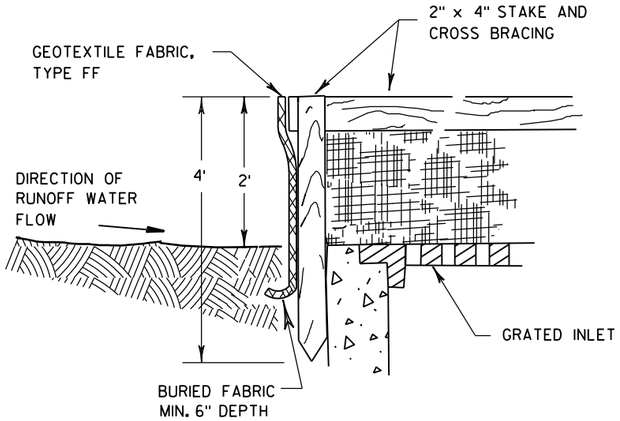

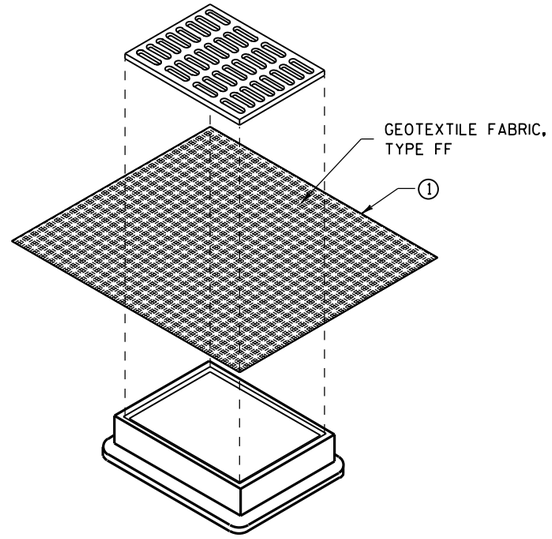

INLET PROTECTION, TYPE B
(WITHOUT CURB BOX)
(CAN BE INSTALLED IN ANY INLET WITHOUT A CURB BOX)

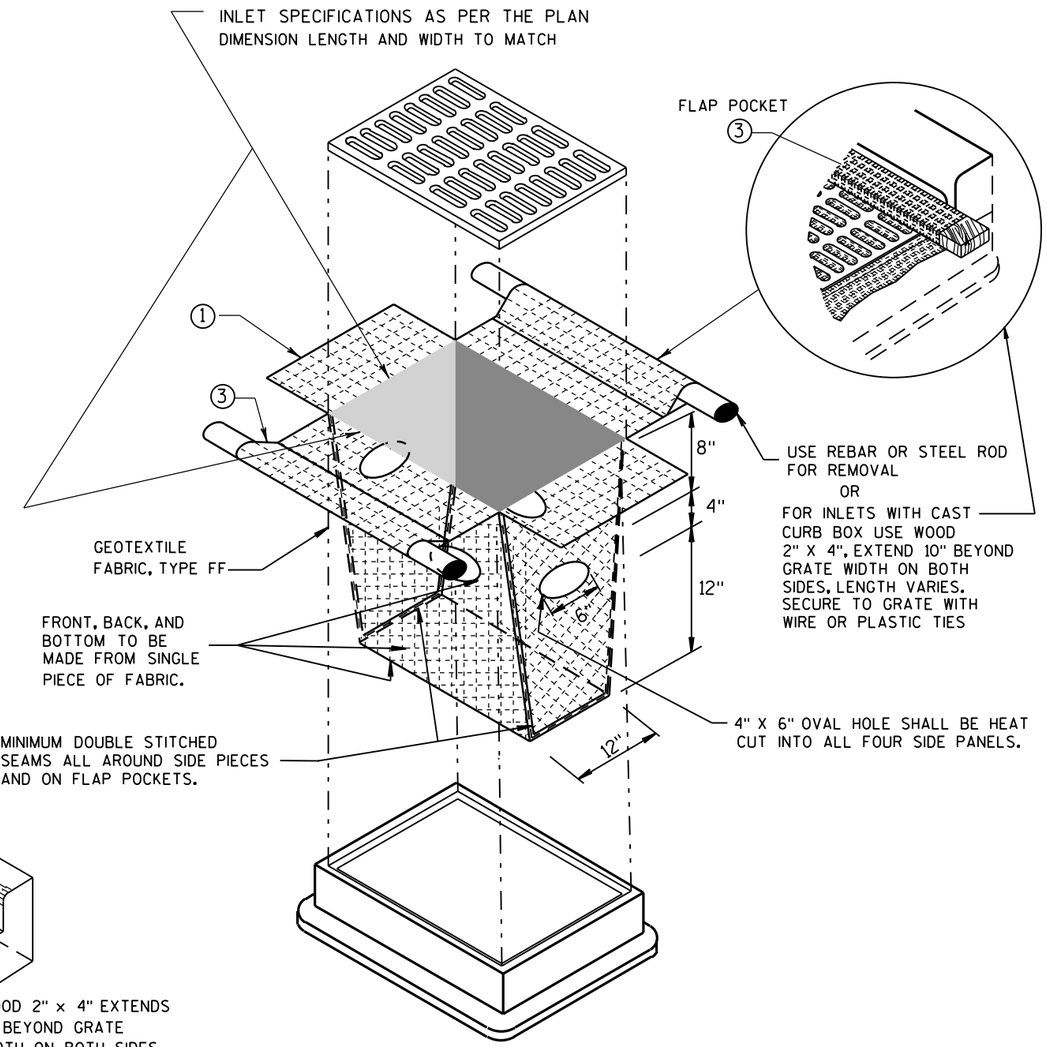

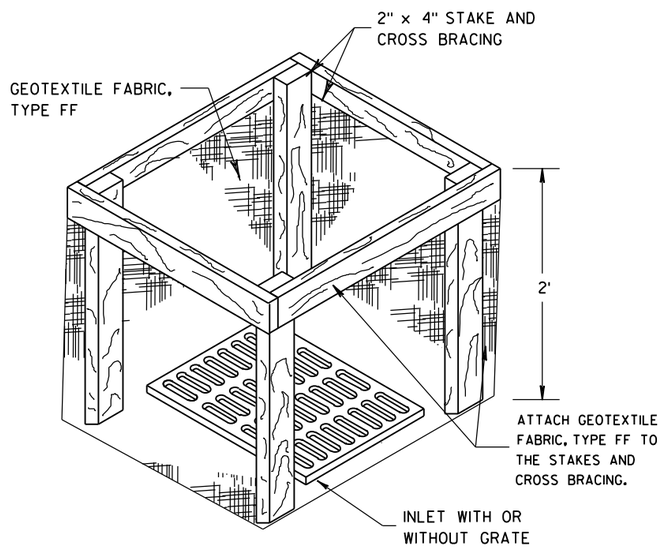

INLET PROTECTION, TYPE A

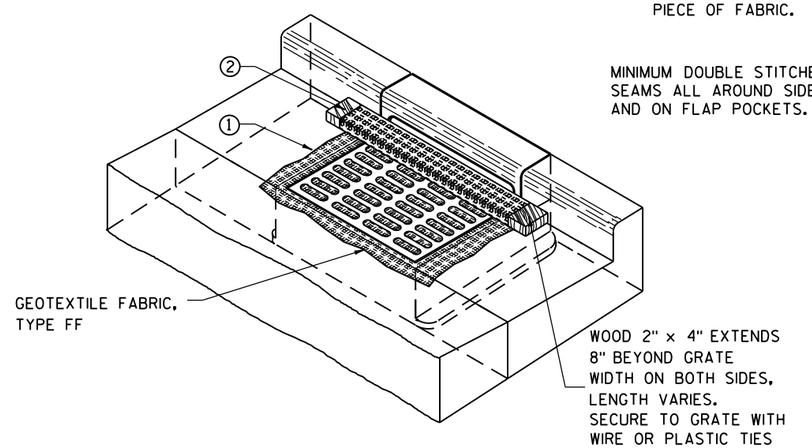

INLET PROTECTION, TYPE C (WITH CURB BOX)

INLET PROTECTION, TYPE D
(CAN BE INSTALLED IN ANY INLET TYPE WITH OR WITHOUT A CURB BOX AS PER NOTE 2)

GENERAL NOTES

INLET PROTECTION DEVICES SHALL BE MAINTAINED OR REPLACED AT THE DIRECTION OF THE ENGINEER.

MANUFACTURED ALTERNATIVES APPROVED AND LISTED ON THE DEPARTMENT'S EROSION CONTROL PRODUCT ACCEPTABILITY LIST MAY BE SUBSTITUTED.

WHEN REMOVING OR MAINTAINING INLET PROTECTION, CARE SHALL BE TAKEN SO THAT THE SEDIMENT TRAPPED ON THE GEOTEXTILE FABRIC DOES NOT FALL INTO THE INLET. ANY MATERIAL FALLING INTO THE INLET SHALL BE REMOVED IMMEDIATELY.

1 FINISHED SIZE, INCLUDING FLAP POCKETS WHERE REQUIRED, SHALL EXTEND A MINIMUM OF 10" AROUND THE PERIMETER TO FACILITATE MAINTENANCE OR REMOVAL.

2 FOR INLET PROTECTION, TYPE C (WITH CURB BOX), AN ADDITIONAL 18" OF FABRIC IS WRAPPED AROUND THE WOOD AND SECURED WITH STAPLES. THE WOOD SHALL NOT BLOCK THE ENTIRE HEIGHT OF THE CURB BOX OPENING.

3 FLAP POCKETS SHALL BE LARGE ENOUGH TO ACCEPT WOOD 2X4.

INSTALLATION NOTES

TYPE B & C

TRIM EXCESS FABRIC IN THE FLOW LINE TO WITHIN 3" OF THE GRATE.

THE CONTRACTOR SHALL DEMONSTRATE A METHOD OF MAINTENANCE, USING A SEWN FLAP, HAND HOLDS OR OTHER METHOD TO PREVENT ACCUMULATED SEDIMENT FROM ENTERING THE INLET.

TYPE D

DO NOT INSTALL INLET PROTECTION TYPE D IN INLETS SHALLOWER THAN 30", MEASURED FROM THE BOTTOM OF THE INLET TO THE TOP OF THE GRATE.

TRIM EXCESS FABRIC IN THE FLOW LINE TO WITHIN 3" OF THE GRATE.

THE INSTALLED BAG SHALL HAVE A MINIMUM SIDE CLEARANCE, BETWEEN THE INLET WALLS AND THE BAG, MEASURED AT THE BOTTOM OF THE OVERFLOW HOLES, OF 3". WHERE NECESSARY THE CONTRACTOR SHALL CINCH THE BAG, USING PLASTIC ZIP TIES, TO ACHIEVE THE 3" CLEARANCE. THE TIES SHALL BE PLACED AT A MAXIMUM OF 4" FROM THE BOTTOM OF THE BAG.

INLET PROTECTION
TYPE A, B, C, AND D

STATE OF WISCONSIN
DEPARTMENT OF TRANSPORTATION

APPROVED
10-16-02 — DATE
/S/ Beth Cannestra — CHIEF ROADWAY DEVELOPMENT ENGINEER
FHWA

6
S.D.D. 8 E 10-2

Inlet Protection Type A, B, C and D

References:

FDM 10-10-27

Bid items associated with this drawing:

ITEM NUMBER	DESCRIPTION	UNIT
628.7005	Inlet Protection Type A	EACH
628.7010	Inlet Protection Type B	EACH
628.7015	Inlet Protection Type C	EACH
628.7020	Inlet Protection Type D	EACH

Standardized Special Provisions associated with this drawing:

STSP NUMBER	TITLE
NONE	

Other SDDs associated with this drawing:

NONE

Design Notes:

See Wisconsin Department of Transportation's Product Acceptability List (PAL) for other inlet protection devices available. A copy of the PAL is available at http://www.dot.wisconsin.gov/business/engrserv/docs/pal.pdf.

Use inlet protection Type A where the wooden posts can be placed around the inlet box. Examples of such locations include median inlets, field inlets, yard drains, or curb inlet locations prior to the placement of curb and gutter.

Inlet protection Type B or C may be used only after the inlet castings are in place. Most urban projects, with curb inlets will require both the bid item or inlet protection Type A and inlet protection Type C, at each inlet location, as the project progresses.

Inlet protection Type D is intended for locations where street flooding could pose safety hazards. Projects without parking lanes and locations where the inlets are on the low side of curves or the low points of vertical profiles should be evaluated for Type D inlet protection.

Contact Person:

Robert Armstrong (608) 267-3147

Silt Fence

References:

FDM 10-10-23

Bid items associated with this drawing:

ITEM NUMBER	DESCRIPTION	UNIT
628.1504	Silt Fence	LF
628.1520	Silt Fence Maintenance	LF

Standardized Special Provisions associated with this drawing:

STSP NUMBER	TITLE
NONE	

Other SSDs associated with this drawing:

NONE

Design Notes:

Silt Fence is not recommended for channel applications.

Increase the calculated need for silt fence by 25% and list this quantity as "undistributed" on the miscellaneous quantities sheet.

Silt Fence is neither biodegradable, recyclable, nor reusable and, therefore is recommended only when other erosion control best management practices are not practical.

Contact Person:

Robert Armstrong (608) 267-3147

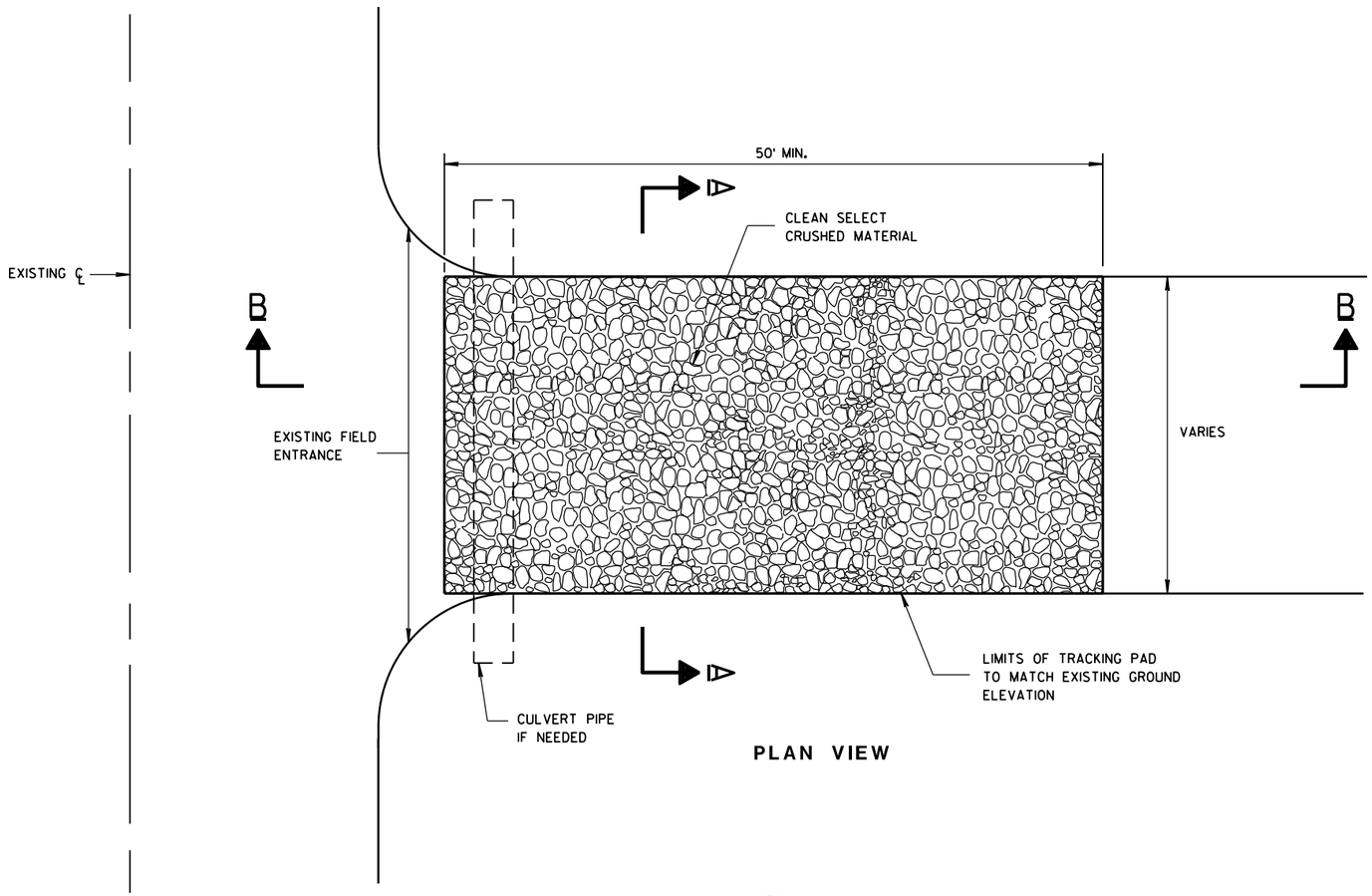

PLAN VIEW

GENERAL NOTES

DETAILS OF CONSTRUCTION, MATERIALS AND WORKMANSHIP NOT SHOWN ON THIS DRAWING SHALL CONFORM TO THE PERTINENT REQUIREMENTS OF THE STANDARD SPECIFICATIONS AND THE APPLICABLE SPECIAL PROVISIONS.

TRACKING PAD SHALL BE INSPECTED DAILY. DEFICIENT AREAS SHALL BE REPAIRED OR REPLACED IMMEDIATELY.

TRACKING PAD TO BE REMOVED AFTER CONSTRUCTION IS COMPLETED.

TRACKING PAD SHALL BE THE FULL WIDTH OF THE EGRESS POINT.

SURFACE WATER MUST BE PREVENTED FROM PASSING THROUGH THE TRACKING PAD. FLOWS SHALL BE DIVERTED AWAY, AROUND OR CONVEYED UNDER THE TRACKING PAD.

CULVERT PIPE OR OTHER BMP USED TO DIVERT WATER AWAY, AROUND OR UNDER THE TRACKING PAD SHALL BE DESIGNED TO CONVEY THE 2 YEAR - 24 HOUR EVENT.

THE COST OF ADDITIONAL BMP TO DIVERT WATER ARE INCIDENTAL TO THE TRACKING PAD BID ITEM.

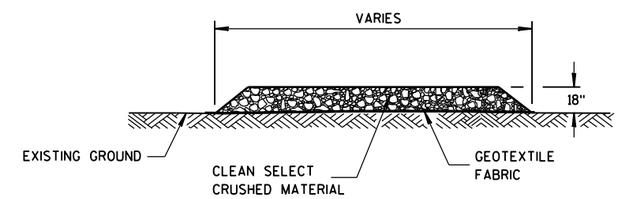

SECTION A-A

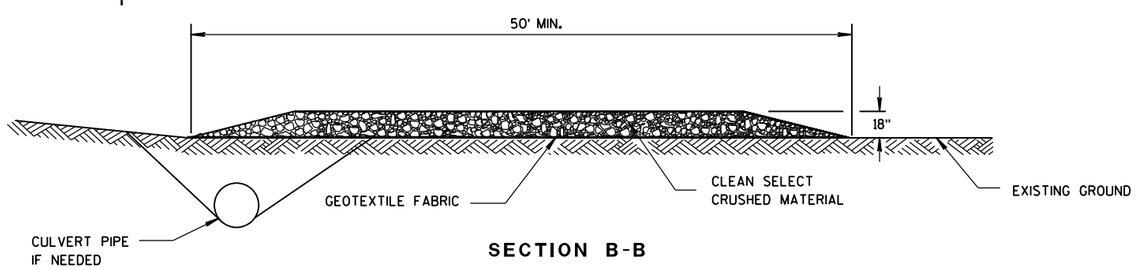

SECTION B-B

TRACKING PAD

TRACKING PAD	
STATE OF WISCONSIN DEPARTMENT OF TRANSPORTATION	
APPROVED 3-24-2011 DATE FHWA	/S/ Jerry H. Zogg ROADWAY STANDARDS DEVELOPMENT ENGINEER

6
S.D.D. 8 E 14-1

Version 1	**Standard Detail Drawing 8e14**	*April 27, 2011*

Tracking Pad

References:

FDM 10-10-42

Bid items associated with this drawing:

Bid items for tracking pad are encoded as follows:

ITEM NUMBER	DESCRIPTION	UNIT
628.7560	Tracking Pad	EACH

Standardized Special Provisions associated with this drawing:

STSP NUMBER	TITLE
NONE	

Other SDDs associated with this drawing:

NONE

Design Notes:

1. Tracking pads are to be used at egress points from the project, borrow and/or waste site locations, where construction vehicles enter live traffic.
2. One tracking pad per selected site.
3. Practices used to divert flow away from, under, or around tracking pads are incidental to the bid item.

Contact Person:

Robert Armstrong (608) 267-3147

PLANS FOR:

WASTE MANAGEMENT TRUCK MAINTENANCE FACILITY

N96 W13840 COUNTY LINE RD.
GERMANTOWN, WI 53022

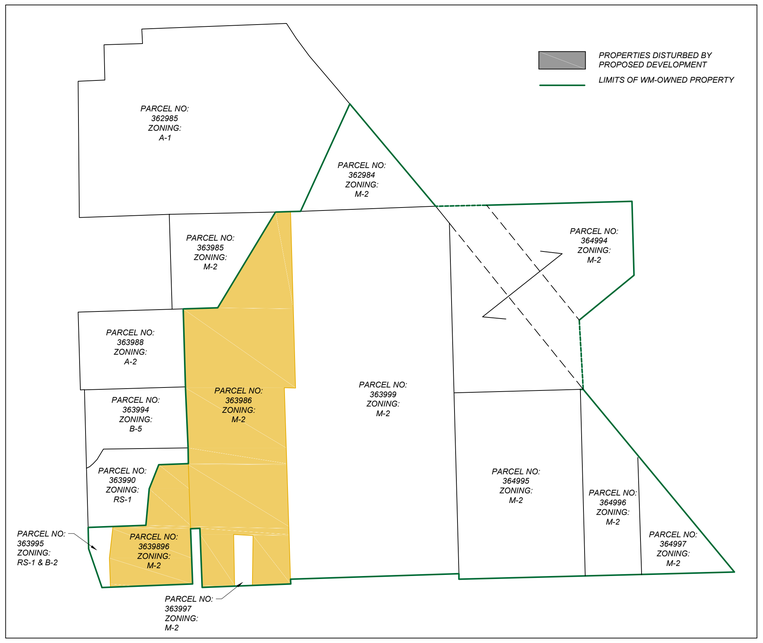

ADJACENT PROPERTY ZONING MAP:
SCALE: 1" = 500'

SITE MAP
SCALE: 1" = 200'

PROJECT CONTACTS:

CIVIL ENGINEER:

DIVERSIFIED ENGINEERING INC.
NICK BERNER, P.E.
175 RAY AVE NE
NEW PHILADELPHIA, OH 44663
PHONE: (330) 364-1631
EMAIL: nberner@div-eng.com

OWNER:

WASTE MANAGEMENT OF WISCONSIN, INC.
DONALD SMITH, P.E.
PO BOX 1450
CHICAGO, IL 60690-1450
PHONE: (262) 806-6039
EMAIL: dasmith@wm.com

SITE INFORMATION:

PARCEL NO 1:		PARCEL NO. 2:		FEMA:	
TAX KEY	GTNV_363996	TAX KEY	GTNV_363986	COMMUNITY NUMBER:	550472
ZONING	M2	ZONING	M2	PANEL #:	0379
TOTAL ACREAGE	8.15 AC.	TOTAL ACREAGE	35.63 AC.	SUFFIX:	D
				DATE OF FIRM:	11/20/2013
				FIRM ZONE:	A
				BFE:	769 FT.

BENCHMARKS:

WASHINGTON COUNTY BENCH MARK NO.	102
DATUM:	NATIONAL GEODETIC VERTICAL DATUM OF 1929
ELEVATION:	766.809
DETAILED DESCRIPTION:	BENCHMARK 102 IS A CHISELED SQUARE SET IN THE TOP OF THE EASTERLY 60-INCH-DIAMETER CONCRETE CULVERT PIPE

LEGAL DESCRIPTION:

PARCEL NO. 1: (363996)
LOT 2 - CSM4247 V28 P30 PT OF SW SW V1013 P676 SEC 36-9-20 8.15 AC.

PARCEL NO. 2: (363986)
PT NW SW V747 P264 EXC PT SOLD SEC 36-9-20

NOTE: LOTS TO BE COMBINED PRIOR TO PERMIT.

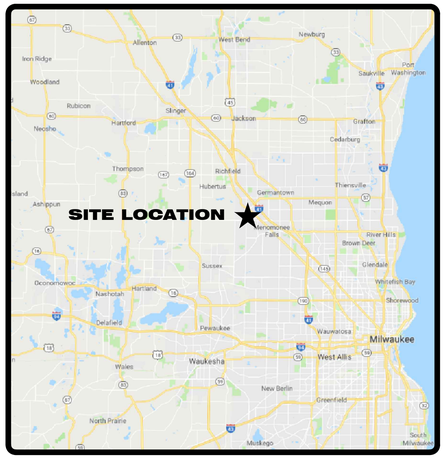

DRAWING INDEX:

GENERAL		LANDSCAPING	
G1.0	COVER	L1.0	SITE LANDSCAPING PLAN
CIVIL		**EXHIBITS**	
C1.0	SYMBOLS LEGEND & GENERAL NOTES	X1.0	SITE PHOTOMETRIC PLAN
C1.1	EXISTING CONDITIONS PLAN		
C1.2	SITE DEMOLITION PLAN		
C1.3	SITE ZONING MAP		
C1.4	SITE IMPROVEMENT PLAN		
C1.5	ENLARGED SITE IMPROVEMENT PLAN		
C1.6	SITE GRADING PLAN		
C1.7	ENLARGED SITE GRADING PLAN		
C1.8	STORM WATER MANAGEMENT PLAN		
C1.9	SITE UTILITY PLAN		
C1.10	HARD SURFACE KEY PLAN		

ISSUED FOR REVIEW 01/04/2019

ABBREVIATIONS

R/W	- Right-of-Way
P/L	- Adjoiner Property Line
℄	- Centerline
P.O.B.	- Place/Point of Beginning
P.O.C.	- Place/Point of Commencement
Rad	- Radius
Arc	- Arc Length
Δ	- Delta Angle
ChL	- Chord Length
ChB	- Chord Bearing
Calc.	- Calculated
Msd.	- Measured
Dd.	- Deed
(Record)	- Actual
N.R.D.	- No Recorded Distance
F.F.E.	- Finished Floor Elevation
CMP	- Corrugated Metal Pipe
DI	- Ductile Iron
HDPE	- High Density Polyethylene
PVC	- Polyvinyl Chloride
RCP	- Reinforced Concrete Pipe
VCP	- Vitrified Clay Pipe

LINEWORK

- Guardrail
- Fence (As Noted)
- Wood Fence (As Noted)
- Steel Fence (As Noted)
- Sanitary Sewer
- Storm Sewer
- Water Line
- Underground Gas Pipeline
- Underground Electric
- Underground Lighting
- Underground Telephone
- Underground Cable T.V.
- Underground Fiberoptics
- Overhead Utilities
- Field Tile
- Gravel Area
- Concrete Area
- No Parking Area
- Building Area
- 1' Elevation Contour
- 5' Elevation Contour

STANDARD/ROADWAY

- Iron Pin Set
- Drill Hole or Railroad Spike Set
- Iron Pin Found
- Iron Pipe Found
- Monument Found as Noted
- Stone Monument Found
- Monument Box
- Sign
- Air Condition Unit
- Monitoring Well
- Bollard Post
- Parking Meter
- Air Pump
- Bollard Light / Ground Light
- Grease Trap
- Ground Light
- Mail Box
- Basketball Hoop
- Gate Entry Key Pad
- Flag Pole
- Interstate Highway
- United States Highway
- State Highway
- County Highway
- Autumn Blaze Red Maple
- Moonglow Juniper
- Endless Summer Hydrangeas
- Pasture Rose

UTILITIES

- Manhole
- Storm Manhole
- Curb Inlet Basin w/ Grate
- Catch Basin
- Storm Vault
- Cleanout
- Sanitary Manhole
- Sanitary Vault
- Water Stand Pipe
- Fire Hydrant
- Post Indicator Valve
- Water Valve
- Water Meter
- Water Manhole
- Water Backflow Preventer
- Water Vault
- Water Curb Box
- Gas Meter
- Gas Valve
- Gas Curb Box
- Fiberoptic Manhole
- Cable T.V. Pedestal
- Electric Meter
- Electric Transformer
- Electric Manhole
- Electric Vault
- Telephone Pedestal
- Telephone Manhole
- Telephone Booth
- Telephone Vault
- Traffic Vault
- Signal Pull Box
- Power Pole
- Traffic Pole
- Telephone Pole
- Flag Pole
- Light Pole
- Guy Wire
- Utility Vault
- Underground Utility Marker
- Vacuum
- Unknown Valve

ALTA/MISC

- Encroachment
- Easement Circle
- Easement Alt. 1
- Easement Alt. 1
- Label 1
- Label 2
- Regular Parking Count
- Handicap Parking Count
- Handicap Space

GENERAL PLAN NOTES:

1. All necessary preventative measures will be taken to keep damage from occurring to adjacent structures such as utilities, tree, poles, structures, and private property during the progress of this work. Any and all damages that occur due to construction activities shall be repaired or replaced by the contractor at no expense to the owner.

2. All material excavated or used in the laying of the pipe will be located and stockpiled in a way not to endanger the public, the personnel on the job, or block natural drainage patterns.

3. DEWATERING:
Contractor is responsible for any and all necessary dewatering activities for any excavation.

4. ROOF DRAIN NOTE:
Roof drains, foundation drains, and other clean water connections to sanitary sewer system are strictly prohibited.

5. NOTIFICATION:
Any time utilities are involved, other than city water and sewer, notify Wisconsin One Call at 1-800-242-8511 three (3) working days prior to excavation.

6. EROSION CONTROL:
Contractor to allow no silt or erosion to enter existing/proposed storm sewer system or water courses during construction phase. Contractor shall use erosion control measures such as inlet filters and ditch check dams in accordance with Wisconsin D.O.T. Specifications.

7. All grass areas to be disturbed shall have topsoil removed and stockpiled prior to excavation. Upon completion of construction, a 6" minimum of topsoil shall be replaced, then seeded and mulched (in accordance with the Wisconsin D.O.T. Specifications). All disturbed areas are to be graded to have positive drainage.

8. Underground utilities were plotted from records and field observations and actual locations may deviate from the plans. Contractor shall be responsible for verifying location of all underground utilities within the project area.

9. Contractor shall exercise caution within and adjacent to his work areas so as not to damage existing facilities. Any facilities that are damaged due to the contractors operations shall be repaired or replaced by the contractor to original or better condition at no expense to the owner.

11. TRACKING OF MUD UPON PUBLIC WAYS
It shall be the duty of the contractor to supervise the handling of all traffic entering and leaving the work area to prevent mud or debris of any nature from being tracked onto the sidewalks and streets of the city.

12. MATERIAL DISPOSAL
The contractor shall not dump any waste materials on the Owner's property without the written permission of the Owner, or another property without the written permission of the owner or lessor thereof. When such permission is granted, dumping shall be subject to regulations prescribed by the Engineer.

13. PROTECTION OF TREES
All trees within the construction area not specified for removal are to be protected by the contractor. Care shall be taken to insure the the roots are not cut. The contractor shall be responsible for replacing any damaged trees of the same size and kind as damaged. Damaged tree branches shall be properly trimmed immediately after damage.

14. CONCRETE PROTECTIONS
The contractor shall protect the finish of all freshly placed concrete from vandalism until the concrete has taken its initial set. The contractor shall be responsible for any damage to the concrete finish caused by vandals due to his failure to protect the concrete.

MAINTENANCE OF TRAFFIC:

1. Contractor shall submit a maintenance of traffic plan to Waste Management, Maintenance Supervisor and Diversified Engineering for review and approval 15 days prior to start of work.

2. Contractors maintenance of traffic plan shall be in accordance with Wisconsin D.O.T. Specifications.

3. The contractor shall furnish and maintain all necessary safeguards such as barricades, satisfactory barriers, lighting, flaggers, and such other traffic control devices as provided in Wisconsin D.O.T. Specifications.

4. All construction traffic control signs used for the project shall conform to the current "Manual of Uniform Traffic Control Devices" and shall be provided, erected, and maintained by the contractor.

CALL BEFORE YOU DIG !

WISCONSIN LAW REQUIRES EXCAVATORS TO NOTIFY THE PROTECTION SERVICE AT LEAST THREE (3) BUSINESS DAYS BUT NOT MORE THAN TEN (10) CALENDAR DAYS PRIOR TO EXCAVATION

Wisconsin One Call Notification Center

www.diggershotline.com

811 or 1-800-242-8511

ISSUE DATE 01/04/2018 SCALE NO SCALE CTR INT. ---
SURVEYED BY ___ CHECKED BY KJB
DRAWN BY CDM/EDW APPROVED BY AJB

REV	DATE	DESCRIPTION	DWN BY	DES BY	CHK BY	APP BY

Diversified Engineering Inc.
CONSULTING ENGINEERS & SURVEYORS
179 RAY AVENUE, N.E.
NEW PHILADELPHIA, OH 44663
Phone: (330) 364-6531
Fax: (330) 364-6531
e-mail: jim@de-eng.com
Web: www.de-eng.com

WASTE MANAGEMENT

PROJECT: TRUCK MAINTENANCE FACILITY
GERMANTOWN, WI

SHEET TITLE: SYMBOLS LEGEND & GENERAL NOTES

SHEET NO: C1.0

JOB NO: ENG-1465

J:\Jobs-Dwg\Jobs\ENGINEERING\ENG-465 WM Maintenance Facility - WI\Working Folder\Drawings\Construction Set\Plan Sets\C1.dwg - 1/4/2018 1:19 PM

EXISTING CONDITIONS PLAN

Scale: 1" = 100'

BOUNDARY NOTES:

- *Waste Management Parcels 363995, 363996, 363997, 363986 and the existing ~0.58ac. parcel "Public Right of Way" off of County Line Rd. to be combined to one contiguous parcel at a later date.*

GENERAL NOTES:

A. *All existing utilities are shown herein as reference only and are based on record of the various utility companies and a field survey. Contractor is responsible for determining the exact locations of all utilities prior to any construction activities.*

B. *All existing conditions, topography, utilities, and property information are taken from a survey of land situated in the City of Sterling, county of Loudoun, State of Virginia, by surveyors: Construction Quality Management, Inc., 2679 Continental Drive, Green Bay, WI. 54311. ph: (920) 465-3911, fx: (920) 465-3913 and Diversified Engineering, Inc., 175 Ray Avenue, NE, New Philadelphia, OH. 44663. ph: (330) 364-1631, fx: (330) 364-4031.*

NORTH

Scale: 1 in. = 100 ft.

0' 100' 200' 300'

Graphic Scale

ISSUE DATE	01/04/2018	SCALE	1" = 100'	CTR INT.	2'
SURVEYED BY		CHECKED BY	KJB		
DRAWN BY	CCM / DWW	APPROVED BY	MJB		

REV	DATE	DESCRIPTION	DWN BY	DES BY	CHK BY	APP BY

Diversified Engineering Inc.
CONSULTING ENGINEERS & SURVEYORS
175 RAY AVENUE, N.E.
NEW PHILADELPHIA, OH 44663
Phone: (330) 364-1631
Fax: (330) 364-4031
e-mail: diei@de-eng.com
Web: www.de-eng.com

WASTE MANAGEMENT

PROJECT: *TRUCK MAINTENANCE FACILITY GERMANTOWN, WI*

SHEET TITLE: *EXISTING CONDITIONS PLAN*

SHEET NO: **C1.1**

JOB NO: ENG-1465

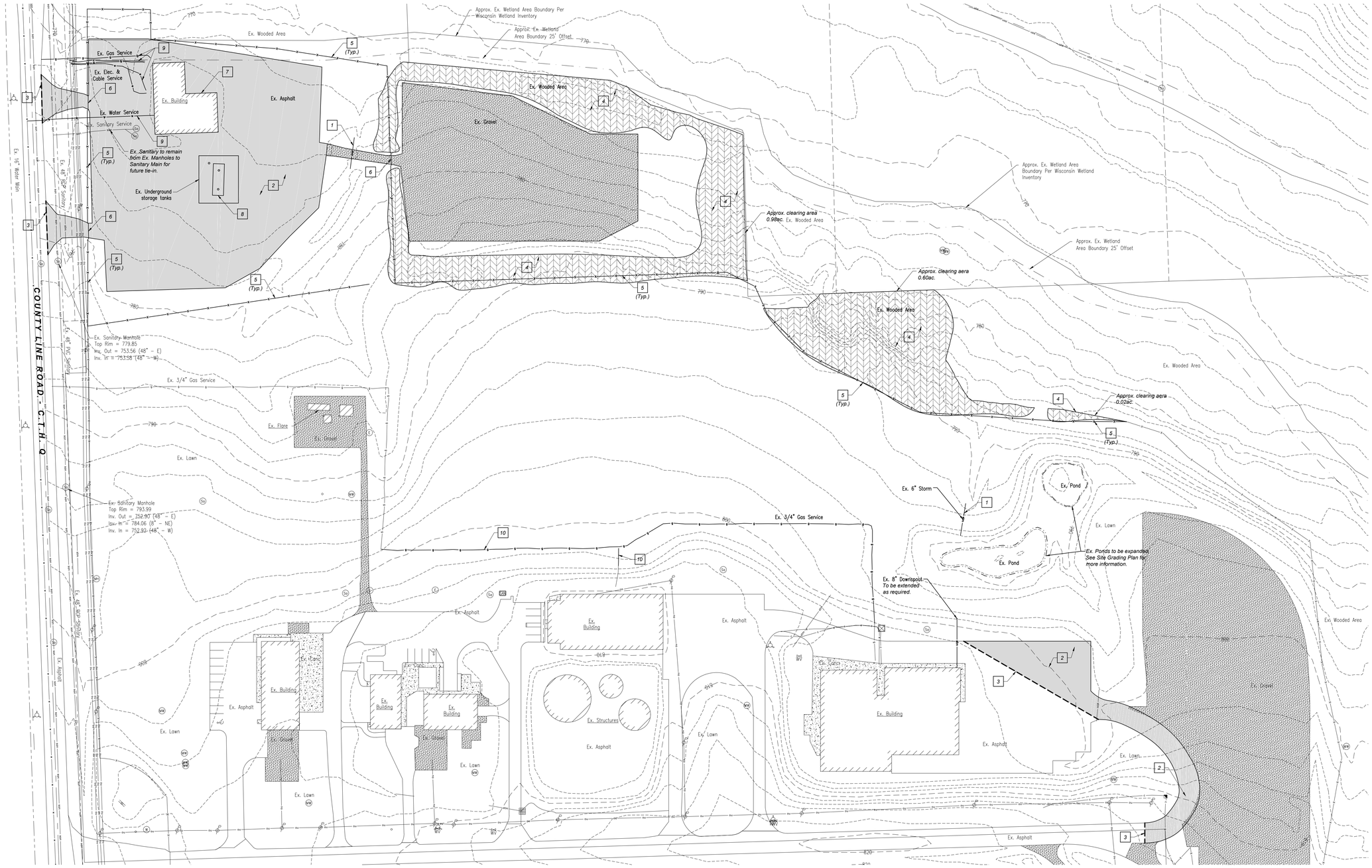

SITE DEMOLITION PLAN

Scale: 1" = 60'

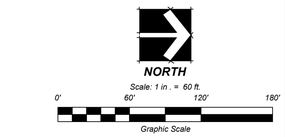

LEGEND:

- Existing Asphalt to be Removed
- Existing Wooded area to be cleared
- Proposed Full-depth Saw Cut Line

KEYED NOTES:

1.) Remove storm water pipe. Demolition debris shall be hauled off-site.

2.) Remove asphalt pavement section and base material. Demolition debris shall be hauled off-site.

3.) Full depth asphalt saw cut line.

4.) Clear, grub and completely remove stump.

5.) Remove fence and appurtenances. Demolition debris shall be hauled off-site.

6.) Remove gate and appurtenances. Coordinate any electrical disconnection with Electrical Contractor. Demolition debris shall be hauled off-site.

7.) Remove building. Coordinate any utility disconnection with associated trade. Demolition debris shall be hauled off-site.

8.) Remove underground storage tanks. Coordinate any utility disconnection with associated trade. Demolition debris shall be hauled off-site.

9.) Existing building utility services to be cut, capped and abandoned in place. Demolition debris shall be hauled off-site.

10.) Relocate 3/4" gas service to location show in drawings.

GENERAL NOTES:

A. At start of project and prior to demolition of existing conditions, contractor shall be in contact with adjacent property owners, city representative, and site representative to coordinate demolition timing.

B. Contractor to remove and dispose of all debris and other materials resulting from demolition and construction operations, disposal will be in accordance with all local, state, and federal regulations governing such operations.

C. Contractor shall take all precautions necessary to avoid damage to adjacent properties during construction phases of this project. Contractor will be solely responsible for damage to neighboring properties occurring as a result of construction activities.

D. All existing utilities are shown herein as reference only and are based on record of the various utility companies. Contractor is responsible for determining the exact locations and depths of all utilities prior to demolition activities.

E. Contractor shall provide traffic control in accordance with the state manual on uniform traffic control devices.

F. Prior to starting demolition, it is the responsibility of the contractor to obtain all permits, tap fees, bond fees, and inspection fees required by local and state governmental agencies.

G. All landfill tipping fees shall be paid by the Contractor.

H. Utilities shall be removed and the trenches backfilled with approved backfill material. Backfill material shall be placed in maximum eight inch lifts and compacted in accordance with the geotechnical report or to a minimum of 95% of the maximum dry density as determined by ASTM D-1557 modified proctor method +/- 3% optimum moisture content.

I. Contractor shall not burn debris or use explosives.

J. Contractor shall be responsible for all phasing of demolition when the demolition may impact traffic, access, or utilities to neighbors or facilities to remain and other surrounding infrastructure or facilities.

K. Conduct demolition operations to ensure minimal interference with roads, sidewalks, and any other adjacent occupied facilities.

L. Do not close or obstruct roads, sidewalks, or any other occupied facilities without permission from the local authority having jurisdiction and/or property owners.

M. The contractor shall be responsible for ensuring the construction site and surrounding areas are free of accumulated debris.

REV	DATE	DESCRIPTION	DWN BY	DES BY	CHK BY	APP BY

ISSUE DATE 01/04/2018 SCALE 1" = 60' CTR INT. 2'
SURVEYED BY COM CHECKED BY KJB
DRAWN BY EBW APPROVED BY MJB

Diversified Engineering Inc.
CONSULTING ENGINEERS & SURVEYORS
175 RAY AVENUE, N.E.
NEW PHILADELPHIA, OH 44663
Phone: (330) 364-6531
Fax: (330) 343-0311
e-mail: deiii@deiii-eng.com
Web: www.deiii-eng.com

WASTE MANAGEMENT

PROJECT: TRUCK MAINTENANCE FACILITY GERMANTOWN, WI

SHEET TITLE: SITE DEMOLITION PLAN

SHEET NO: C1.2

JOB NO: ENG-1465

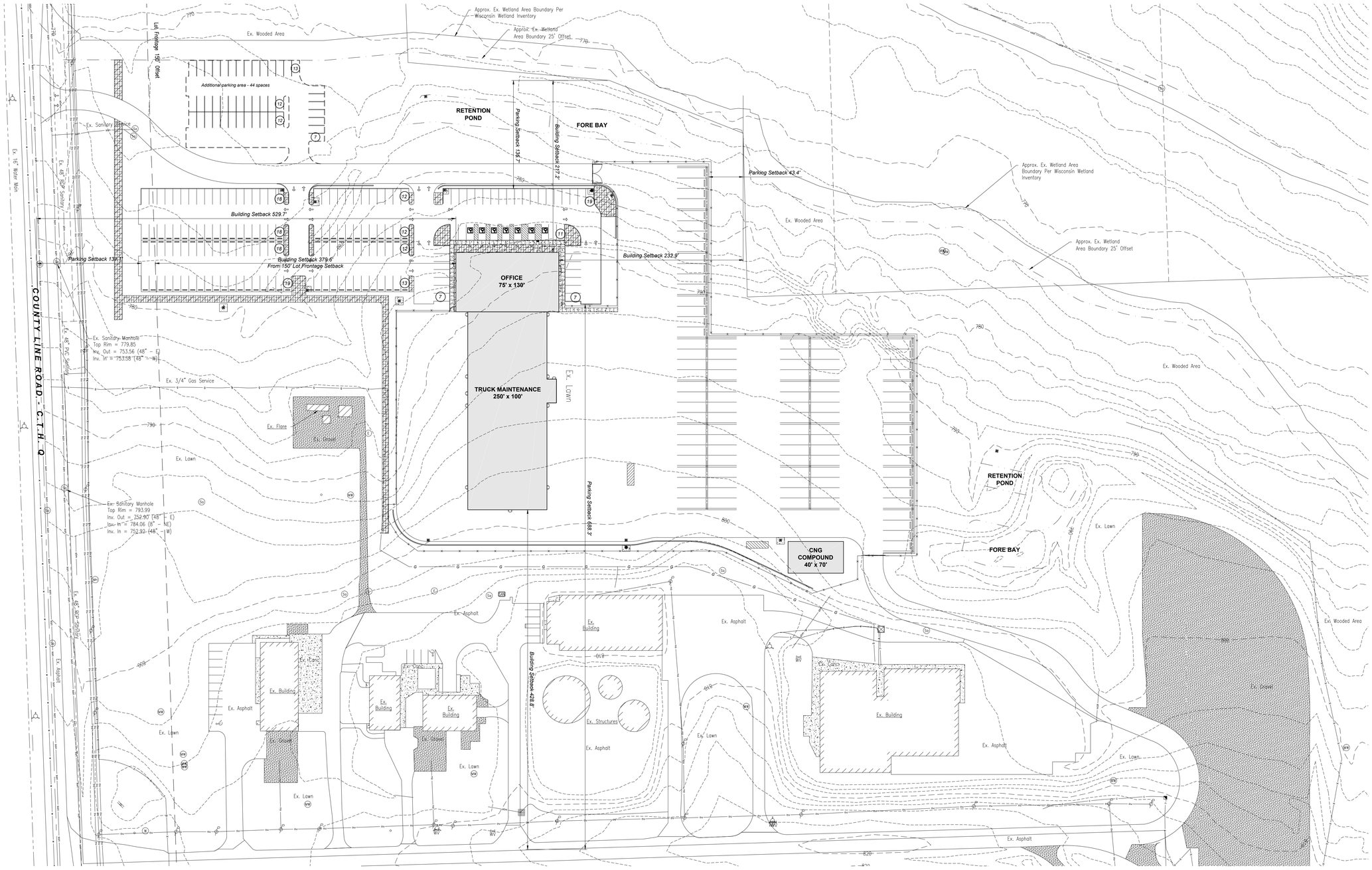

SITE DEMOLITION PLAN

Scale: 1" = 60'

NORTH

Scale: 1 in . = 60 ft.

0' 60' 120' 180'

Graphic Scale

LEGEND:

- (8) Proposed Parking Space Count Indicator
- Proposed Chain Link Fence
- Proposed Landscaping Area, See Site Landscaping Plan for further coordination

PARKING BREAKDOWN

Total Parking Spaces (Public) = 159
Total Parking Spaces (Handicap) = 7
Typical Parking Space Dimension: 10' x 20' (Unless otherwise noted)

SETBACK NOTES:

Required Front yard Setback:	30'
Required Side yard Setback:	25'
Required Rear yard Setback:	25'
Required Lot Frontage Setback:	150'

LOT COVERAGE NOTES:

Lot square footage total:	2,005,005 S.F.
Impervious surface percentage:	25.7%
Green space percentage:	74.3%
Percent permitted (over/under):	under 48.6%

*NOTE: Proposed Coverage includes existing development on the parcel where applicable.

PARKING CALCULATIONS:

- Professional Office Space:
  - Office Area: 9,750 S.F.
  - Office Employees: 128 Persons

Required parking one space per 200 S.F. + 1/2 space per employee
- 9,750 S.F. / 200 S.F. = 49 Spaces
- 128 Persons / 2 = 64 Spaces

- Total Required Office Spaces = 113 Spaces

- Auto Repair Space:
  - Auto Repair Area: 19,500 S.F.
  - Auto Repair Employees: 16 Persons

Required parking one space per 250 S.F. + 1 space per employee
- 19,500 S.F. / 250 S.F. = 78 Spaces
- 16 Persons = 16 Spaces

- Total Required Auto Repair Spaces = 94 Spaces

Required Spaces:
Total required spaces = 207 Spaces per code

Provided Spaces:
159 Standard Spaces
7 Accessible Spaces
166 Total Spaces Provided

*NOTE: Additional parking area if required for future tenant = 44 spaces. bringing total available spaces to 210 parking spaces, meeting required parking spaces per code.

REV	DATE	DESCRIPTION	DWN BY	DES BY	CHK BY	APP BY

ISSUE DATE 01/04/2016 SCALE 1" = 60' CTR INT. 2'
SURVEYED BY COM CHECKED BY KJB
DRAWN BY EDW APPROVED BY MJB

Diversified Engineering Inc.
CONSULTING ENGINEERS & SURVEYORS
175 RAY AVENUE, N.E.
NEW PHILADELPHIA, OH 44663
Phone: (330) 364-6531
Fax: (330) 364-6533
e-mail: dei@dei-eng.com
Web: www.dei-eng.com

WASTE MANAGEMENT

PROJECT: TRUCK MAINTENANCE FACILITY GERMANTOWN, WI

SHEET TITLE: SITE ZONING MAP

SHEET NO: C1.3

JOB NO: ENG-1465

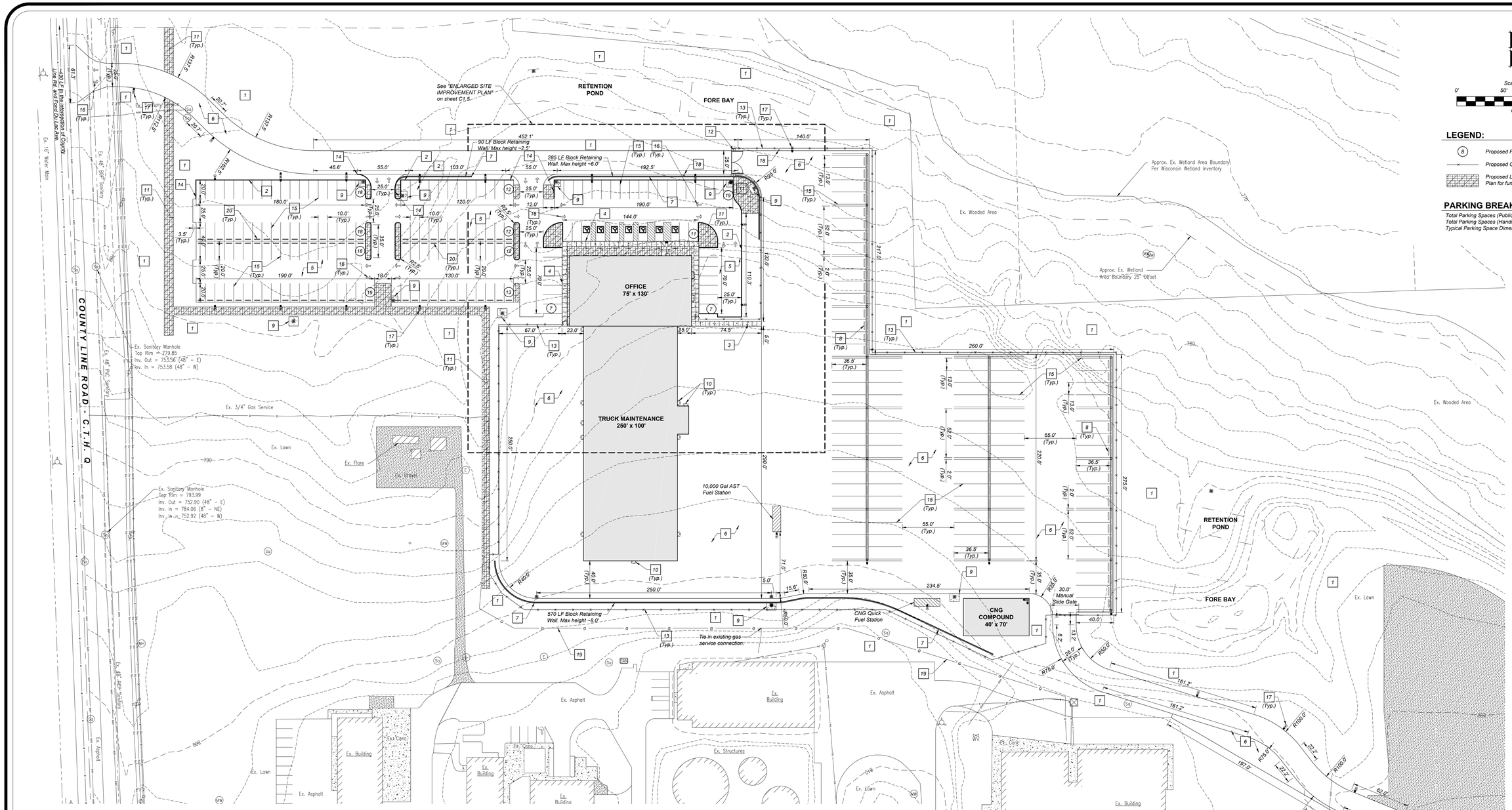

SITE IMPROVEMENT PLAN

Scale: 1" = 50'

LEGEND:

- (8) Proposed Parking Space Count Indicator
- Proposed Chain Link Fence
- Proposed Landscaping Area, See Site Landscaping Plan for further coordination

PARKING BREAKDOWN

Total Parking Spaces (Public) = 159
Total Parking Spaces (Handicap) = 7
Typical Parking Space Dimension: 10' x 20' (Unless otherwise noted)

KEYED NOTES:

1.) Grass area (slope to drain). Re-seed existing lawn where disturbed by new construction and construction activities.

2.) 6" concrete curb.

3.) 4" concrete sidewalk.

4.) Integral concrete curb and walk.

5.) Proposed light-duty asphalt pavement.

6.) Proposed heavy-duty concrete pavement.

7.) Block Retaining Wall.

8.) Concrete truck wheel stop.

9.) Reinforced Concrete Apron.

10.) Frost footing at man doors.

11.) Proposed Landscaping: (Shown for reference). See Sheet L1.0 "Site Landscaping Plan".

12.) Swing Gate Operator & Concrete Pad provided & installed by G.C., equal to "LiftMaster Elite Series" Model CSW24U, 120V (Conduits & Wire by E.C.).

13.) 6' high chain link security fence / access gate.

14.) Taper curb.

15.) Pavement painting: 4" wide yellow striping.

16.) Pavement marking: Yellow directional arrow.

17.) Proposed site lighting: By E.C. (shown for reference). See site electrical plan.

18.) Pedestal for gate operator access control key pad, furnished and installed by G.C. Conduit to pedestal by E.C., wiring by Access Control installer.

19.) Proposed relocated 3/4" gas service line location.

20.) Concrete parking bumper.

*NOTE: See "SITE PLAN REVIEW SUBMITTAL PACKET" for typical construction details.

GENERAL NOTES:

A. Provide smooth transition from newly paved areas to existing paved area as necessary. The existing edge of pavement shall be free of all loose debris at all areas where proposed pavement meets existing pavement. The edge of existing asphalt pavement shall be properly sealed with a tack coat material in all areas where new asphalt pavement is indicated to join existing.

B. Contractor is responsible for locating and verifying all existing underground utilities prior to construction, and is responsible for any damage to them during construction.

C. All dimensions to face of curb or edge of concrete unless otherwise noted.

D. All pavement markings depicting parking spaces, accessible parking spaces, access aisles and no parking signage shall be applied with mechanical equipment and templates at the locations and lengths shown on the plans (two coats all locations). Paint shall be yellow in color (unless otherwise specified) and shall meet all applicable requirements of state department of highway specifications, unless otherwise specified.

E. Contractor shall be solely responsible for and take all precautions necessary to avoid damage to adjacent properties during the construction phases of this project.

F. All construction methods and materials must conform to current standards and specifications of the federal, state, county, city or local requirements, whichever has jurisdiction.

G. All excavated and/or disturbed areas indicated as "grass area" (per keyed note #1), are to be seeded with a locally adaptive turf seed mix after finish grading unless otherwise noted. All newly seeded areas shall have a minimum of 6" of topsoil. Hold soil down 1" from pavement elevation. Contractor to supply straw mulch where grass seed has been planted.

H. All radii indicated on plans shall be constructed as circular.

I. Resurface or reconstruct at least to original conditions all areas where traffic by contractors, subcontractors or suppliers have damaged existing pavement, lawns or other improvements during construction, after construction work is complete.

J. The contractor shall verify all dimensions and elevations in the field prior to the start of construction. The contractor shall be responsible for all field dimensions and elevations during the entire construction schedule. If any discrepancies are found in these plans from actual field dimensions, the contractor shall contact the engineer immediately.

REV	DATE	DESCRIPTION	DWN BY	DES BY	CHK BY	APP BY

ISSUE DATE 01/04/2016 SCALE 1" = 50' CTR INT. 2'
SURVEYED BY CGM CHECKED BY KJB
DRAWN BY EGW APPROVED BY MJB

Diversified Engineering Inc.
CONSULTING ENGINEERS & SURVEYORS
175 RAY AVENUE, N.E.
NEW PHILADELPHIA, OH 44663
Phone: (330) 364-1831
Fax: (330) 343-5151
e-mail: dei@dei-eng.com
Web: www.dei-eng.com

WASTE MANAGEMENT

PROJECT: TRUCK MAINTENANCE FACILITY GERMANTOWN, WI

SHEET TITLE: SITE IMPROVEMENT PLAN

SHEET NO: C1.4

JOB NO: ENG-1465

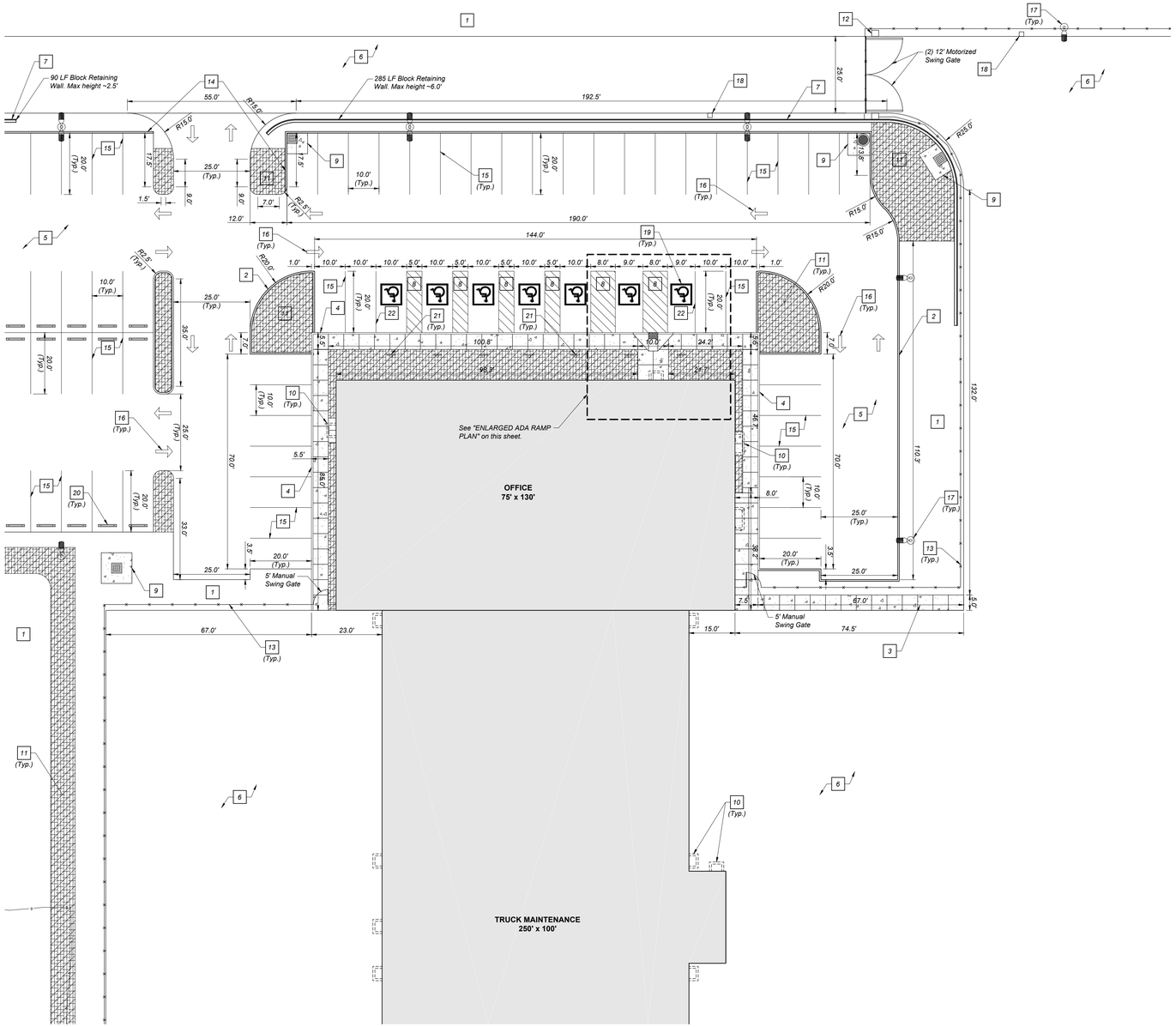

ENLARGED SITE IMPROVEMENT PLAN

Scale: 1" = 20'

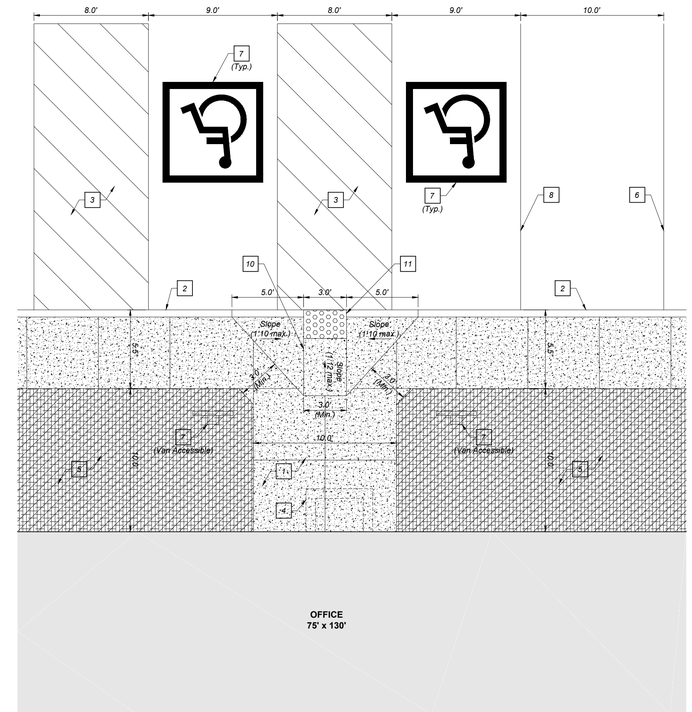

ENLARGED ADA RAMP PLAN

Scale: 1" = 5'

NORTH

Scale: 1 in . = 20 ft.

0' 20' 40' 60'

Graphic Scale

KEYED NOTES:

1.) Grass area (slope to drain). Re-seed existing lawn where disturbed by new construction and construction activities.

2.) 6" concrete curb.

3.) 4" concrete sidewalk.

4.) Integral concrete curb and walk.

5.) Proposed light-duty asphalt pavement.

6.) Proposed heavy-duty concrete pavement.

7.) Block Retaining Wall.

8.) Accessible parking design to meet all governing codes. Quantity as required by I.A.C. & A.D.A. - accessible parking spaces and their access aisles shall be 1:20 running-slope and 1:48 cross-slope. Accessible route delineation shall be 4" wide blue outline w/ 4" blue cross hatching.

9.) Reinforced Concrete Apron.

10.) Frost footing at man doors.

11.) Proposed Landscaping: (Shown for reference). See Sheet L1.0 "Site Landscaping Plan".

12.) Swing Gate Operator & Concrete Pad provided & installed by G.C., equal to "LiftMaster Elite Series" Model CSW24U, 120V (Conduits & Wire by E.C.).

13.) 6' high chain link security fence / access gate.

14.) Taper curb.

15.) Pavement painting: 4" wide yellow striping.

16.) Pavement marking: Yellow directional arrow.

17.) Proposed site lighting: By E.C. (shown for reference). See site electrical plan.

18.) Pedestal for gate operator access control key pad, furnished and installed by G.C. Conduit to pedestal by E.C., wiring by Access Control installer.

19.) Pavement painting: "Universal Symbol", blue painted field w/ white painted wheelchair and border.

20.) Concrete parking bumper.

21.) Accessible parking sign (post-mounted).

22.) Pavement painting: 4" wide blue paint striping at accessible parking space.

*NOTE: See "SITE PLAN REVIEW SUBMITTAL PACKET" for typical construction details.

KEYED NOTES:

1.) 4" concrete sidewalk.

2.) Integral concrete curb and walk.

3.) Accessible parking design to meet all governing codes. Quantity as required by I.A.C. & A.D.A. - accessible parking spaces and their access aisles shall be 1:20 running-slope and 1:48 cross-slope. Accessible route delineation shall be 4" wide blue outline w/ 4" blue cross hatching.

4.) Frost footing at man doors.

5.) Proposed Landscaping: (Shown for reference). See Sheet L1.0 "Site Landscaping Plan".

6.) Pavement painting: 4" wide yellow striping.

7.) Pavement painting: "Universal Symbol", blue painted field w/ white painted wheelchair and border.

8.) Pavement painting: 4" wide blue paint striping at accessible parking space.

9.) Accessible parking sign (post-mounted).

10.) Curb ramp w/detectable warning mat.

11.) Detectable warning mat: (1) 2'x3' tile, cast-in-place w/truncated domes complying with ADA guidelines, brick red. Equal to Detectable Warning Systems - "EZ Set Tile".

*NOTE: See "SITE PLAN REVIEW SUBMITTAL PACKET" for typical construction details.

GENERAL NOTES:

A. Provide smooth transition from newly paved areas to existing paved area as necessary. The existing edge of pavement shall be free of all loose debris at all areas where proposed pavement meets existing pavement. The edge of existing asphalt pavement shall be properly sealed with a tack coat material in all areas where new asphalt pavement is indicated to join existing.

B. Contractor is responsible for locating and verifying all existing underground utilities prior to construction, and is responsible for any damage to them during construction.

C. All dimensions to face of curb or edge of concrete unless otherwise noted.

D. All pavement markings depicting parking spaces, accessible parking spaces, access aisles and no parking signage shall be applied with mechanical equipment and templates at the locations and lengths shown on the plans (two coats all locations). Paint shall be yellow in color (unless otherwise specified) and shall meet all applicable requirements of state department of highway specifications, unless otherwise specified.

E. Contractor shall be solely responsible for and take all precautions necessary to avoid damage to adjacent properties during the construction phases of this project.

F. All construction methods and materials must conform to current standards and specifications of the federal, state, county, city or local requirements, whichever has jurisdiction.

G. All excavated and/or disturbed areas indicated as "grass area" (per keyed note #1), are to be seeded with a locally adaptive turf seed mix after finish grading unless otherwise noted. All newly seeded areas shall have a minimum of 6" of topsoil. Hold soil down 1" from pavement elevation. Contractor to supply straw mulch where grass seed has been planted.

H. All radii indicated on plans shall be constructed as circular.

I. Resurface or reconstruct at least to original conditions all areas where traffic by contractors, subcontractors or suppliers have damaged existing pavement, lawns or other improvements during construction, after construction work is complete.

J. The contractor shall verify all dimensions and elevations in the field prior to the start of construction. The contractor shall be responsible for all field dimensions and elevations during the entire construction schedule. If any discrepancies are found in these plans from actual field dimensions, the contractor shall contact the engineer immediately.

REV	DATE	DESCRIPTION	DWN BY	DES BY	CHK BY	APP BY

ISSUE DATE 01/04/2016 SCALE AS NOTED CTR INT. 2'
SURVEYED BY
DRAWN BY COM CHECKED BY KJB
EDW APPROVED BY MJB

Diversified Engineering Inc.
CONSULTING ENGINEERS & SURVEYORS
175 RAY AVENUE, N.E.
NEW PHILADELPHIA, OH 44663
Phone: (330) 364-5531
Fax: (330) 364-4431
e-mail: diei@diei-eng.com
Web: www.diei-eng.com

WASTE MANAGEMENT

PROJECT: TRUCK MAINTENANCE FACILITY
GERMANTOWN, WI

SHEET TITLE: ENLARGED SITE IMPROVEMENT PLAN

SHEET NO: C1.5

JOB NO: ENG-1465

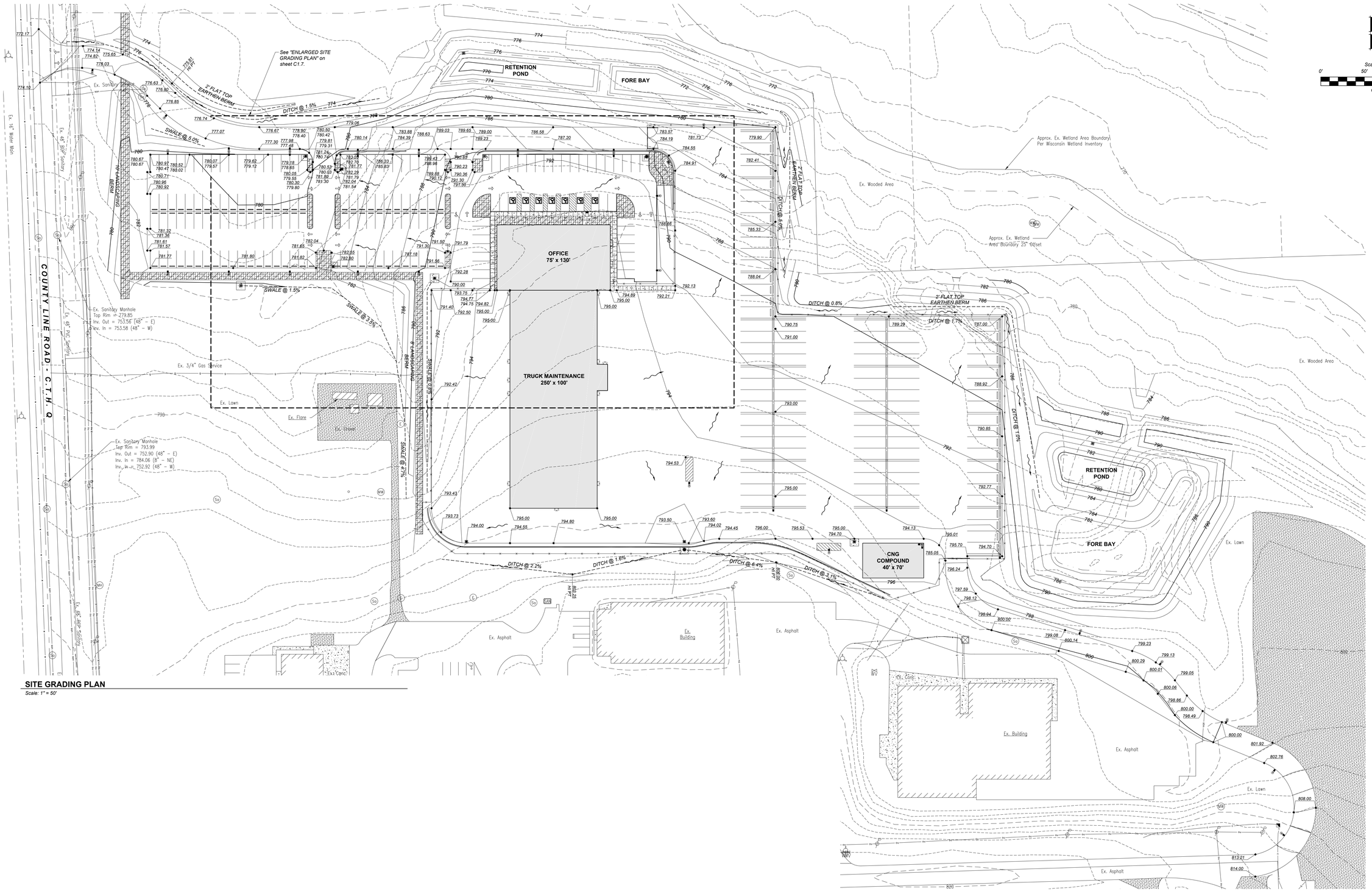

SITE GRADING PLAN

Scale: 1" = 50'

REV	DATE	DESCRIPTION	DWN BY	DES BY	CHK BY	APP BY

ISSUE DATE 01/04/2016 SCALE 1" = 50' CTR INT. 2'
SURVEYED BY
DRAWN BY COM CHECKED BY KJB
APPROVED BY EGW

Diversified Engineering Inc.
CONSULTING ENGINEERS & SURVEYORS
175 RAY AVENUE, N.E.
NEW PHILADELPHIA, OH 44663
Phone: (330) 364-5831
Fax: (330) 343-0931
e-mail: dei@dei-eng.com
Web: www.dei-eng.com

WASTE MANAGEMENT

PROJECT: TRUCK MAINTENANCE FACILITY
GERMANTOWN, WI

SHEET TITLE: SITE GRADING PLAN

SHEET NO: C1.6

JOB NO: ENG-1465

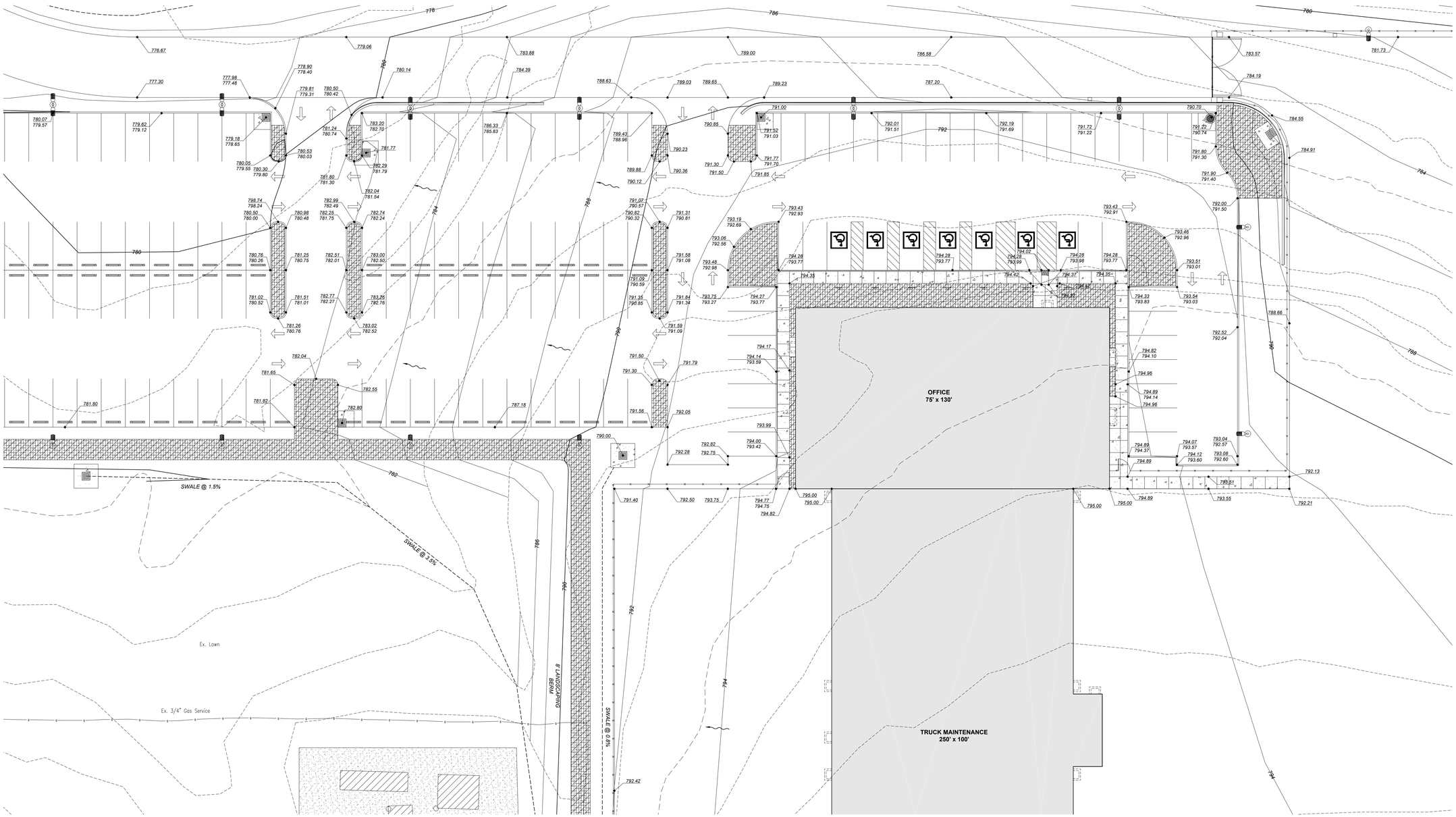

ENLARGED SITE GRADING PLAN

Scale: 1" = 20'

NORTH

Scale: 1 in . = 20 ft.

0' 20' 40' 60'

Graphic Scale

REV	DATE	DESCRIPTION	DWN BY	DES BY	CHK BY	APP BY

ISSUE DATE 01/04/2016 SCALE AS NOTED CTR INT. 2'

SURVEYED BY COM CHECKED BY KJB

DRAWN BY EDW APPROVED BY MJB

Diversified Engineering Inc.
CONSULTING ENGINEERS & SURVEYORS
175 RAY AVENUE, N.E.
NEW PHILADELPHIA, OH 44663
Phone: (330) 364-1831
Fax: (330) 364-1833
e-mail: dei@dei-eng.com
Web: www.dei-eng.com

WASTE MANAGEMENT

PROJECT: TRUCK MAINTENANCE FACILITY
GERMANTOWN, WI

SHEET TITLE: ENLARGED SITE GRADING PLAN

SHEET NO: C1.7

JOB NO: ENG-1465

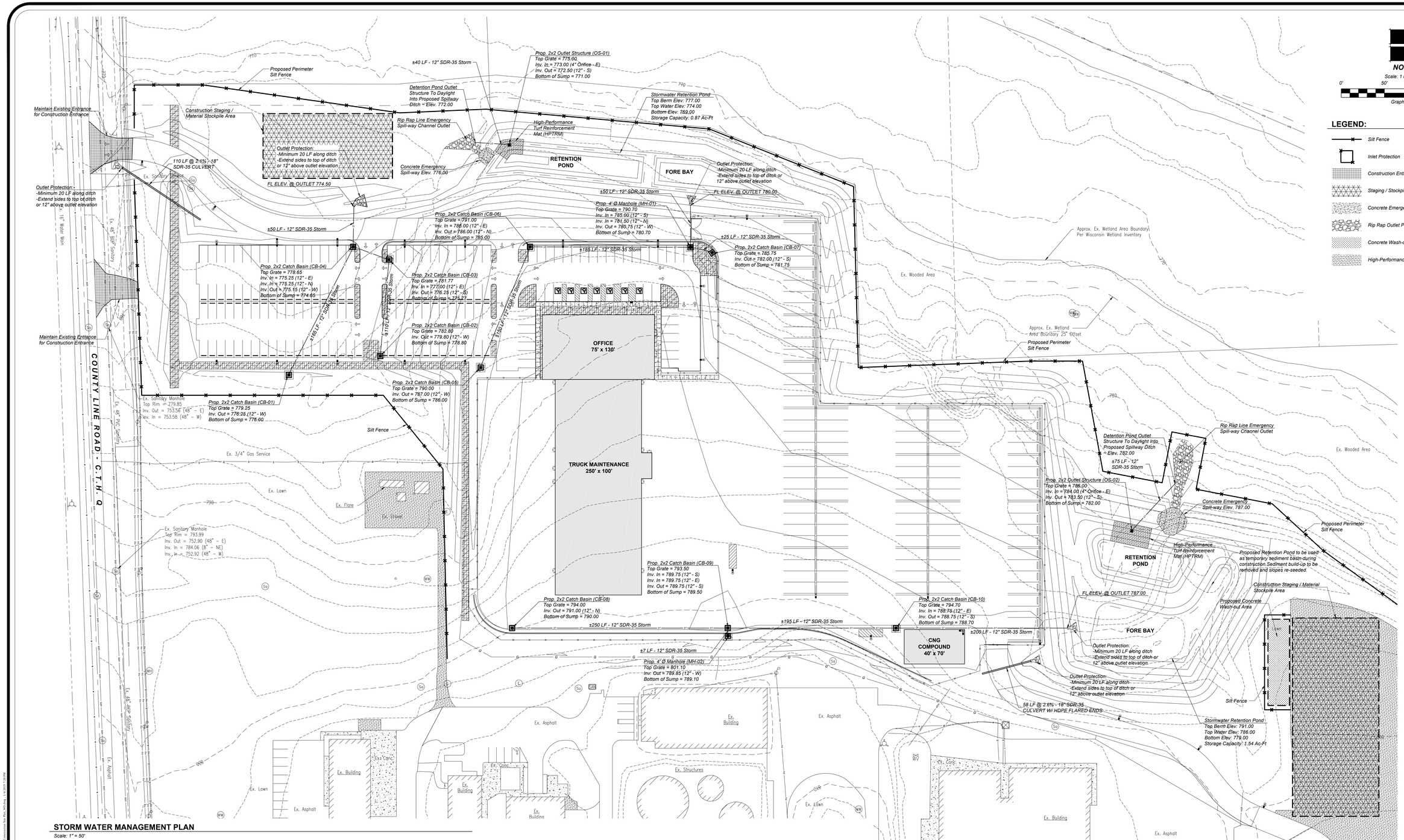

STORM WATER MANAGEMENT PLAN

Scale: 1" = 50'

GENERAL NOTES:

A. STREET SWEEPING: Streets directly adjacent to construction entrances and receiving traffic from the development area shall be cleaned daily to remove sediment tracked off-site.

B. INTERNAL INSPECTION AND MAINTENANCE: All controls on the development shall be inspected at least once every seven (7) calendar days and within 24 hours after any storm event greater than one-half (0.5) inch of rain per 24 hour period by the Owner.

REV	DATE	DESCRIPTION	DWN BY	DES BY	CHK BY	APP BY

ISSUE DATE 01/04/2016 SCALE 1" = 50' CTR INT. 2'
SURVEYED BY CGM CHECKED BY KJB
DRAWN BY DSW APPROVED BY MJB

Diversified Engineering Inc.
CONSULTING ENGINEERS & SURVEYORS
175 RAY AVENUE, N.E.
NEW PHILADELPHIA, OH 44663
Phone: (330) 364-6631
Fax: (330) 364-6632
e-mail: dei@de-eng.com
Web: www.de-eng.com

WASTE MANAGEMENT

PROJECT: TRUCK MAINTENANCE FACILITY GERMANTOWN, WI

SHEET TITLE: STORM WATER MANAGEMENT PLAN

SHEET NO: C1.8

JOB NO: ENG-1465

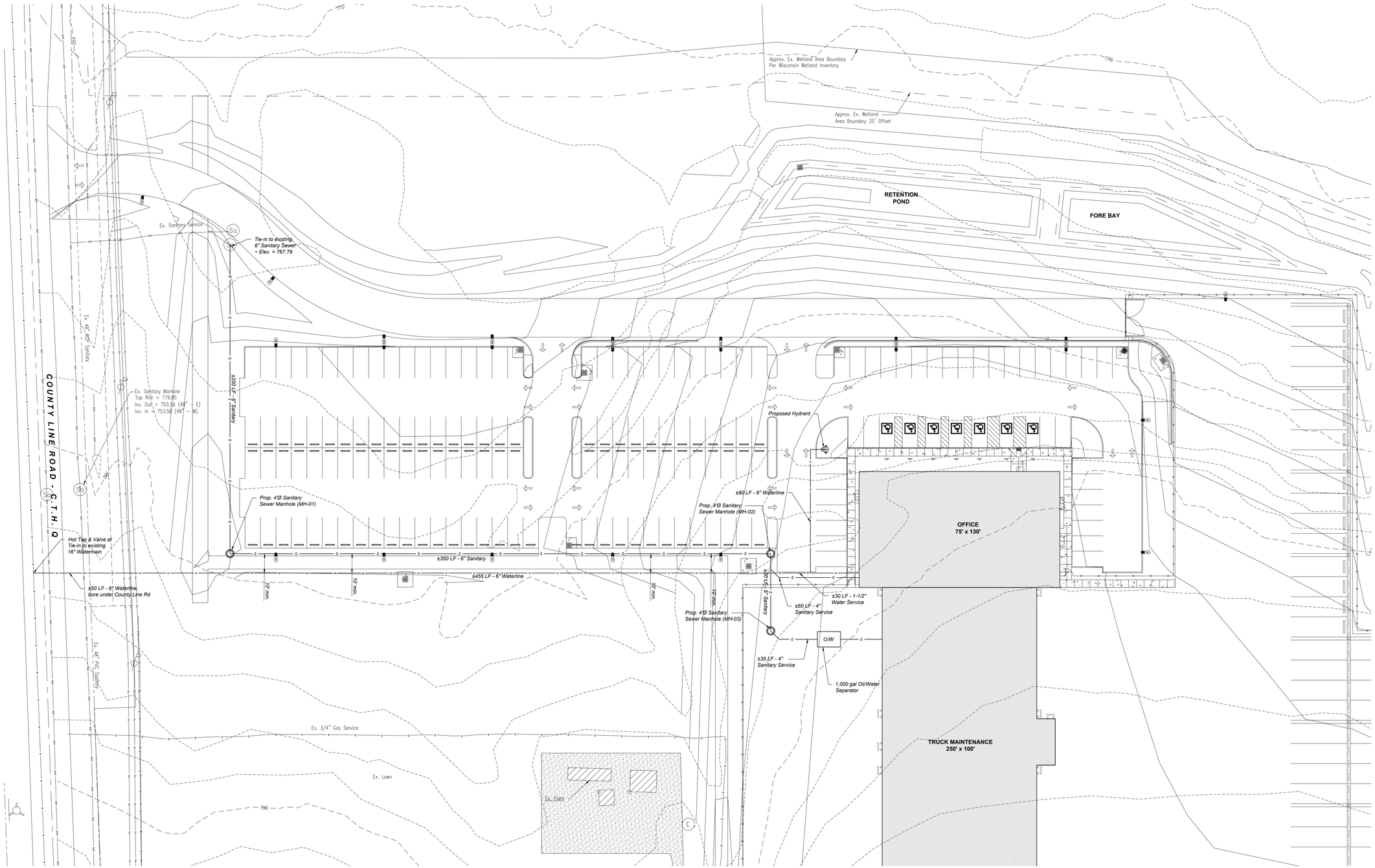

SITE UTILITY PLAN

Scale: 1" = 30'

GENERAL NOTES:

A. All existing utilities are shown herein as reference only and are based on record of the various utility companies. Contractor is responsible for determining the exact locations and depths of all utilities prior to any construction activities.

B. The contractor shall field verify the elevations and pipe material of existing piping prior to ordering any pre-cast structure.

C. The contractor shall refer to architectural plans for exact location and size of downspouts.

D. The Site Contractor shall coordinate locations of utilities provided by other trades not shown on this plan.

ISSUE DATE	01/04/2016	SCALE	1" = 30'
SURVEYED BY		CHECKED BY	
DRAWN BY	COM / DSW	APPROVED BY	
REV	DATE	DESCRIPTION	DWN BY / DES BY / CHK BY / APP BY

CTR INT: 2'
KJB
MJB

Diversified Engineering Inc.
CONSULTING ENGINEERS & SURVEYORS
175 RAY AVENUE, N.E.
NEW PHILADELPHIA, OH 44663
Phone: (330) 364-6631
Fax: (330) 364-6631
e-mail: dei@de-eng.com
Web: www.de-eng.com

WASTE MANAGEMENT

PROJECT: TRUCK MAINTENANCE FACILITY
GERMANTOWN, WI

SHEET TITLE: SITE UTILITY PLAN

SHEET NO: C1.9

JOB NO: ENG-1465

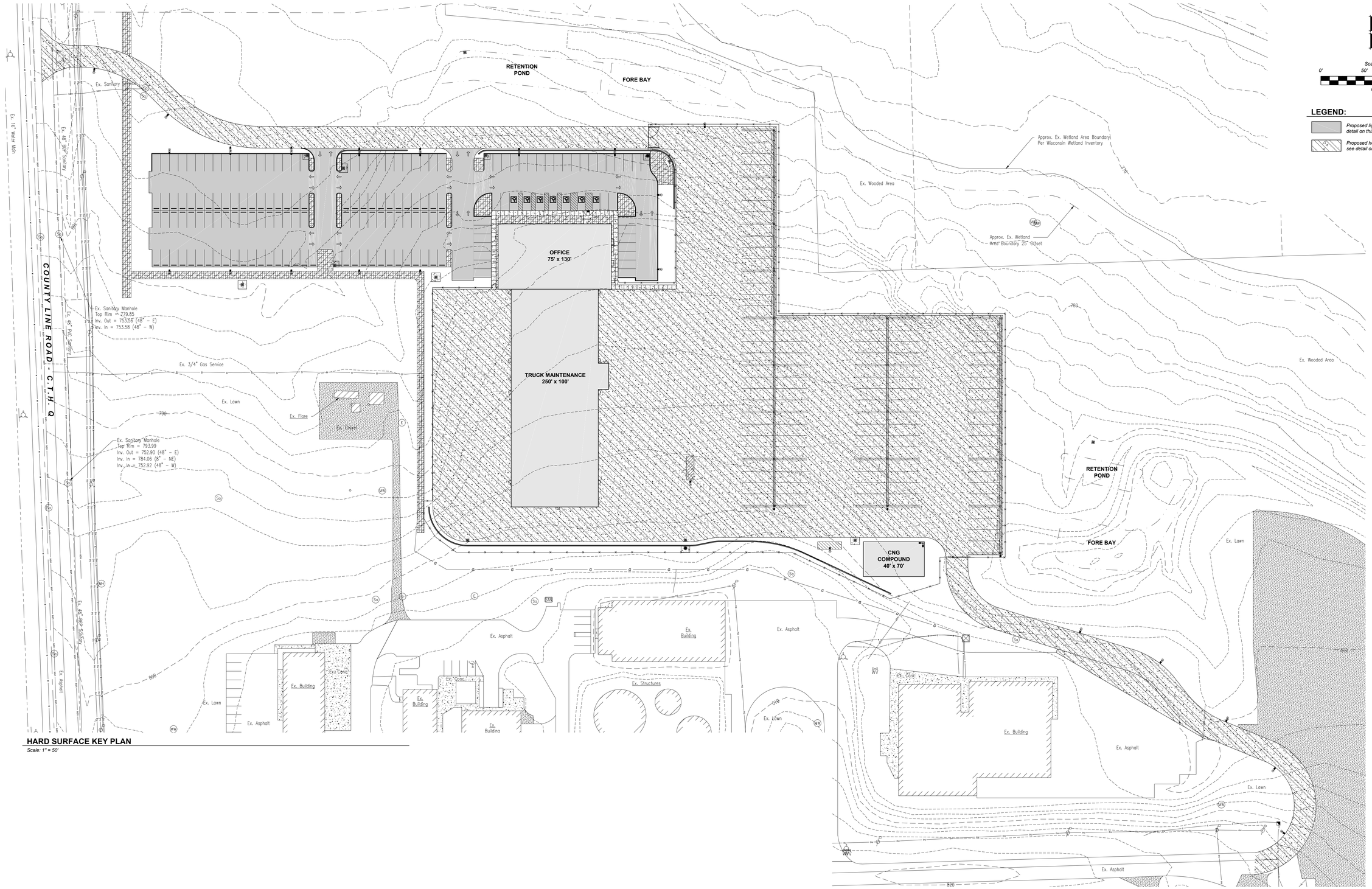

HARD SURFACE KEY PLAN

Scale: 1" = 50'

REV	DATE	DESCRIPTION	DWN BY	DES BY	CHK BY	APP BY

ISSUE DATE 01/08/2016 SCALE 1" = 50' CTR INT. 2'
SURVEYED BY COM CHECKED BY NJB
DRAWN BY SW APPROVED BY MJB

Diversified Engineering Inc.
CONSULTING ENGINEERS & SURVEYORS
178 RAY AVENUE, N.E.
NEW PHILADELPHIA, OH 44663
Phone: (330) 364-5531
Fax: (330) 364-5531
e-mail: diei@dei-eng.com
Web: www.dei-eng.com

WASTE MANAGEMENT

PROJECT: TRUCK MAINTENANCE FACILITY
GERMANTOWN, WI

SHEET TITLE: HARD SURFACE KEY PLAN

SHEET NO: C1.10

JOB NO: ENG-1465

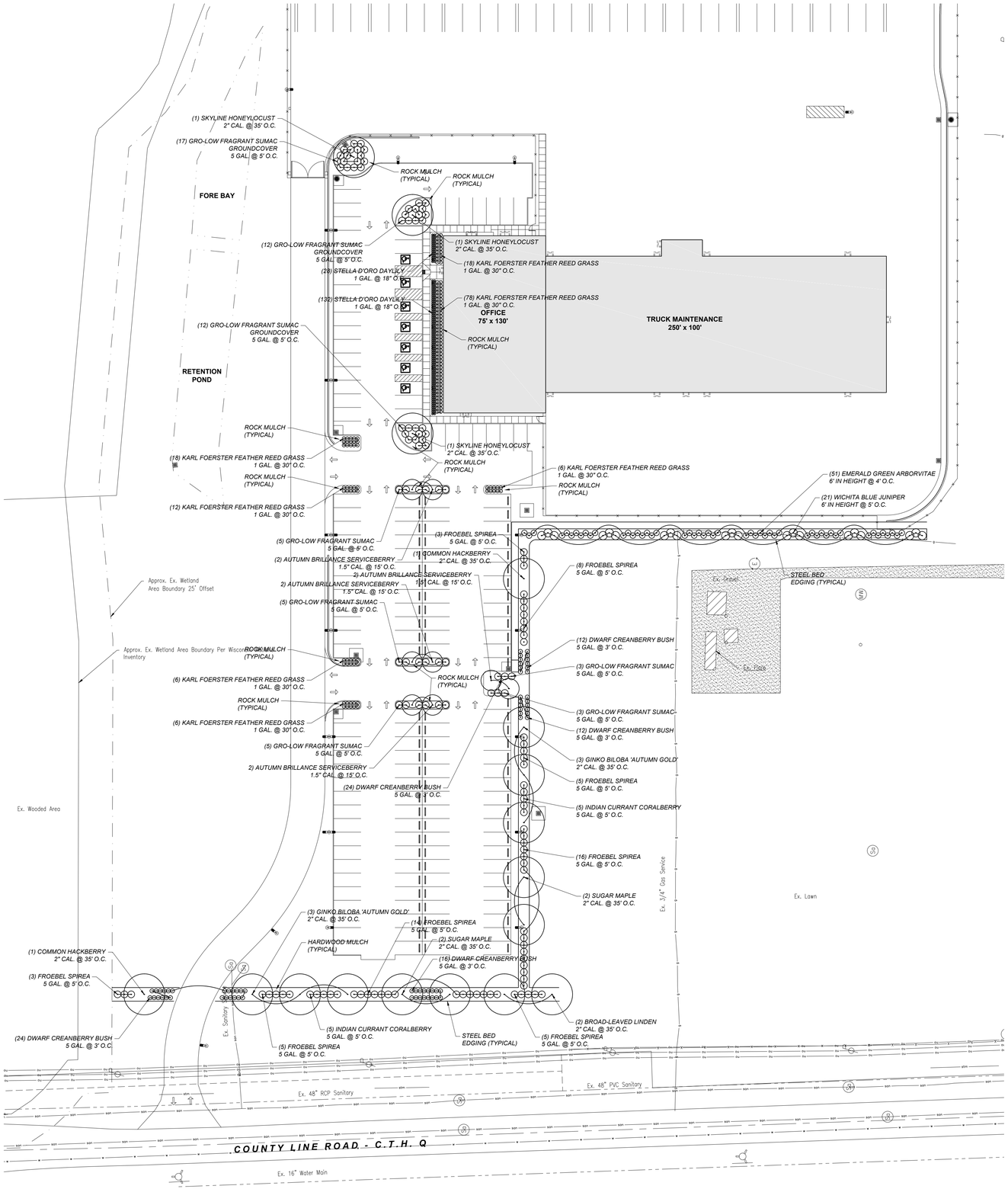

SITE LANDSCAPING PLAN

Scale: 1" = 40'

NORTH

Scale: 1 in . = 40 ft.

0' 40' 80' 120'

Graphic Scale

GENERAL NOTES:

1. Verify all conditions and dimensions shown on the plans at the site prior to commencement of work. Notify landscape architect of an discrepancies. Contractor shall notify utility companies and verify the exact location of utility easements and all utilities in the field prior to commencement of excavation or construction activities.
2. All work shall conform to the City of Mason City and S.U.D.A.S. standards unless noted otherwise.
3. Underground utilities shown are for information only, locations have not been verified. Contractor shall contact Iowa One-Call and verify location of existing underground utilities before commencing any excavation to avoid damage. The contractor shall be responsible for repair of an damage caused by construction activities. Exercise extreme care in excavating and working around existing site features and utilities. Verify location and condition of all utilities. Field adjust plant locations so as to avoid conflicts with utilities.
4. Verify plant counts. If quantities in planting schedule vary from landscape plan graphic, graphic shall prevail.
5. Locate plant material by measuring off of the drawing to the nearest 6" and stake where trees will be located. The Landscape Architect will review prior to planting.
6. Align and equally space in all directions tree, shrub and perennials designated per these drawing and typical details.
7. Backfill soil (planting soil) for tree pits shall consist of a mixture of two parts top soil and one part compost. Remove soil excavated from tree planting area and dispose of off site.
8. Remove existing topsoil and stockpile on site; topsoil to be incorporated into soils at a later date.
9. Finish grade of planter areas shall be 3 inches below adjacent curb or structure to allow for 3" of mulch depth.
10. All landscape beds shall be edged with DURAEDGE 5"x$\frac{1}{8}$" steel lawn edging as manufacturing by the J.D. Russell Company (800-888-9709) or approved equal. Edging shall be hot rolled steel with an electrostatically applied powder coat surface paint, black in color.
11. New trees shall meet the minimum standards of ANSI Z60.1, Latest Edition. Plants shall be freshly dug or well-established in container as applicable; not root-bound in the container. Trees with broken or unidentifiable leader, broken or mushroomed balls, lopsided growth, or weak open structure (in the opinion of the landscape architect) will not be acceptable.
12. The contractor shall submit at least one nursery photograph of each type of tree species for approval by the landscape architect prior to shipping and installation. Most species are matched so the specimens must have consistent branching heights and habits within species. The landscape architect will use the submitted photographs as a standard of comparison for each tree species installed on site.
13. Wood mulch for tree rings and where indicated on the plan shall be 3" deep, composed of cedar or cypress wood of uniform color and long, fibrous nature (2-4 inches in length). Do not use walnut. Do not use chips. Apply pre-emergence herbicide over the top of all wood mulch. Mulch rings around new trees shall be minimum 6' in diameter. Thoroughly water mulched areas, rake to a smooth finished surface.
14. Planting beds next to the building and parking lot islands shall be 3" deep washed river rock mulch over weed barrier fabric. Fabric shall be a woven polypropylene, 3.5 to 4.0 ounce products. Apply pre-emergence herbicide over the top of all rock mulch.
15. All plants shall be maintained and watered by the contractor through substantial completion.
16. No trees, bushes, or vegetation existing on site to remain.

PLANTING SCHEDULE

	QTY	COMMON NAME	BOTANICAL NAME	TYPE	CAL (IN.)	CONT.
TREES						
	3	THORNLESS HONEYLOCUST "SKYLINE"	GLEDITSIA TRIACANTHOS VAR. INERMIS	DECIDUOUS SHADE TREE	0'-2"	B&B
	2	COMMON HACKBERRY	CELTIS OCCIDENTALIS	DECIDUOUS SHADE TREE	0'-2"	B&B
	6	GINKO BILOBA 'AUTUMN GOLD'	GINKO BILOBA 'AUTUMN GOLD'	DECIDUOUS SHADE TREE	0'-2"	B&B
	4	SUGAR MAPLE	ACER SACCHARUM	DECIDUOUS SHADE TREE	0'-2"	B&B
	2	BROAD-LEAVED LINDEN	TILIA PLATYPHYLLOS	DECIDUOUS SHADE TREE	0'-2"	B&B
	8	AUTUMN BRILLIANCE SERVICEBERRY	AMERLANCHIER X GRANDIFLORA 'AUTUMN BRILLIANCE'	DECIDUOUS ORNAMENTAL TREE	0'-2"	B&B
SHRUBS						
	51	EMERALD GREEN ARBOVITAE	THUJA OCCIENTALIS 'SMARAGD'	EVERGREEN SHRUB		6' HEIGHT
	21	WICHITA BLUE JUNIPER	JUNIPERUS SCOPULORUM 'WICHITA BLUE'	EVERGREEN SHRUB		6' HEIGHT
	65	GRO-LOW FRAGRANT SUMAC	RHUS AROMATICA 'GRO-LOW'	DECIDUOUS SHRUB		5 GAL
	59	SEA GREEN JUNIPER	JUNIPERUS X PFITZERIANA 'SEA GREEN'	EVERGREEN SHRUB		5 GAL
	10	INDIAN CURRANT CORALBERRY	SYMPHORICARPOS ORBICULATUS	DECIDUOUS SHRUB		5 GAL
	64	DWARF CRANBERRY BUSH	VIBURNUM OPULUS 'NANUM'	DECIDUOUS SHRUB		5 GAL
PERENNIALS						
	154	KARL FOERSTER FEATHER REED GRASS	CALAMAGROSTIS X ACULTIFLORA 'KARL FOERSTER'	PERENNIAL GRASS		1 GAL
	160	STELLA D'ORO DAYLILY	HEMEROCALLIS 'STELLA DE ORO'	PERENNIAL FLOWER		6' HEIGHT

ISSUE DATE 01/04/2018 SCALE 1" = 40' CTR INT.
SURVEYED BY COM CHECKED BY KJB
DRAWN BY LGB APPROVED BY MJB

REV	DATE	DESCRIPTION	DWN BY	DES BY	CHK BY	APP BY

Diversified Engineering Inc.
CONSULTING ENGINEERS & SURVEYORS
175 RAY AVENUE, N.E.
NEW PHILADELPHIA, OH 44663
Phone: (330) 364-5531
Fax: (330) 364-5533
e-mail: dei@de-eng.com
Web: www.de-eng.com

WASTE MANAGEMENT

PROJECT: TRUCK MAINTENANCE FACILITY
GERMANTOWN, WI

SHEET TITLE: SITE LANDSCAPING PLAN

SHEET NO: L1.0

JOB NO: ENG-1465

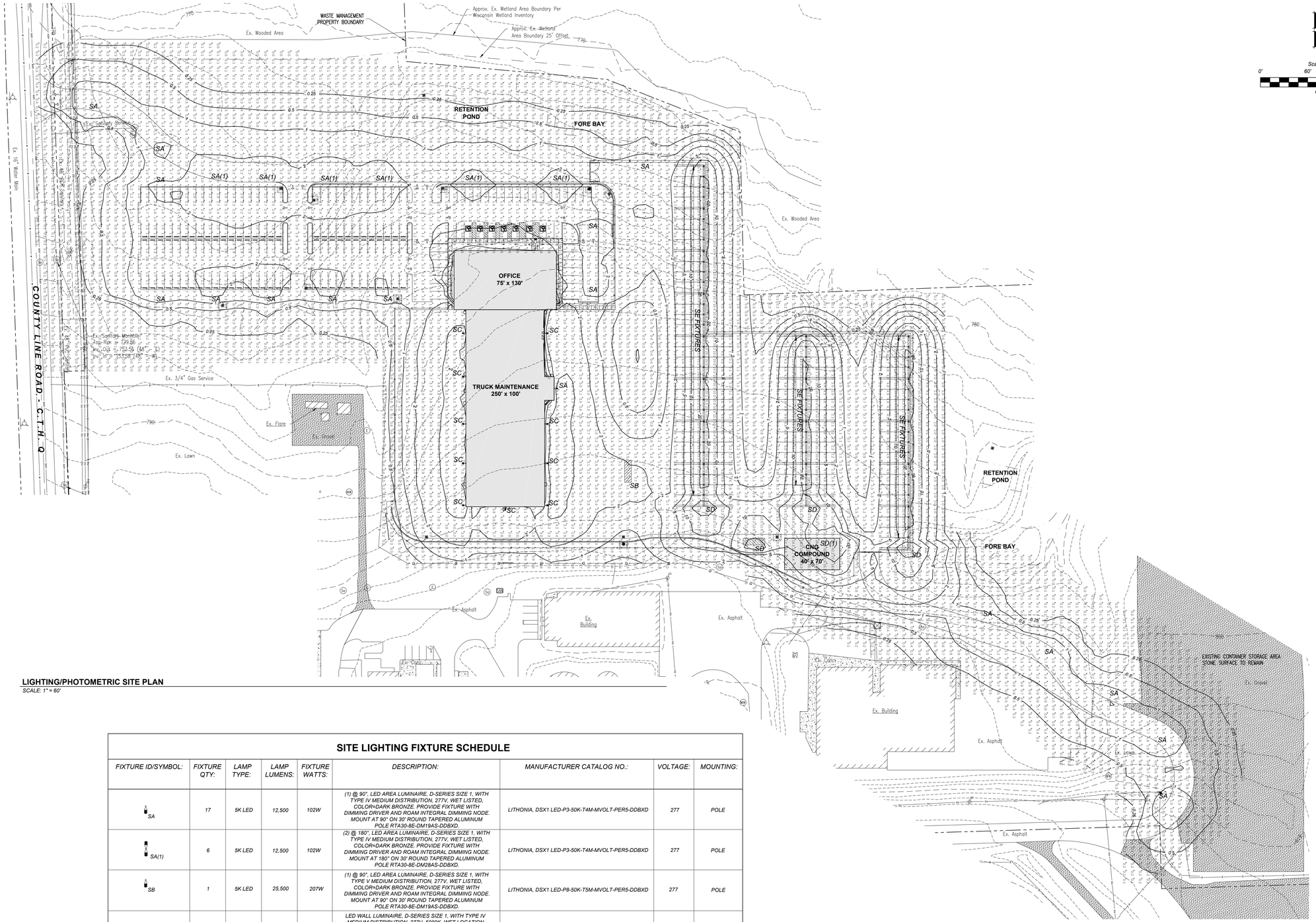

LIGHTING/PHOTOMETRIC SITE PLAN

SCALE: 1" = 60'

SITE LIGHTING FIXTURE SCHEDULE

FIXTURE ID/SYMBOL:	FIXTURE QTY:	LAMP TYPE:	LAMP LUMENS:	FIXTURE WATTS:	DESCRIPTION:	MANUFACTURER CATALOG NO.:	VOLTAGE:	MOUNTING:
SA	17	5K LED	12,500	102W	(1) @ 90°, LED AREA LUMINAIRE, D-SERIES SIZE 1, WITH TYPE IV MEDIUM DISTRIBUTION, 277V, WET LISTED, COLOR=DARK BRONZE. PROVIDE FIXTURE WITH DIMMING DRIVER AND ROAM INTEGRAL DIMMING NODE. MOUNT AT 90° ON 30' ROUND TAPERED ALUMINUM POLE RTA30-8E-DM19AS-DDBXD.	LITHONIA, DSX1 LED-P3-50K-T4M-MVOLT-PER5-DDBXD	277	POLE
SA(1)	6	5K LED	12,500	102W	(2) @ 180°, LED AREA LUMINAIRE, D-SERIES SIZE 1, WITH TYPE IV MEDIUM DISTRIBUTION, 277V, WET LISTED, COLOR=DARK BRONZE. PROVIDE FIXTURE WITH DIMMING DRIVER AND ROAM INTEGRAL DIMMING NODE. MOUNT AT 180° ON 30' ROUND TAPERED ALUMINUM POLE RTA30-8E-DM28AS-DDBXD.	LITHONIA, DSX1 LED-P3-50K-T4M-MVOLT-PER5-DDBXD	277	POLE
SB	1	5K LED	25,500	207W	(1) @ 90°, LED AREA LUMINAIRE, D-SERIES SIZE 1, WITH TYPE V MEDIUM DISTRIBUTION, 277V, WET LISTED, COLOR=DARK BRONZE. PROVIDE FIXTURE WITH DIMMING DRIVER AND ROAM INTEGRAL DIMMING NODE. MOUNT AT 90° ON 30' ROUND TAPERED ALUMINUM POLE RTA30-8E-DM19AS-DDBXD .	LITHONIA, DSX1 LED-P8-50K-T5M-MVOLT-PER5-DDBXD	277	POLE
SC	10	5K LED	25,000	207W	LED WALL LUMINAIRE, D-SERIES SIZE 1, WITH TYPE IV MEDIUM DISTRIBUTION, 277V, 5000K, WET LOCATION LISTED. COLOR = DARK BRONZE. PROVIDE FIXTURE WITH DIMMING DRIVE AND ROAM INTEGRAL DIMMING NODE.	LITHONIA, DSX1 LED-P8-50K-T4M-MVOLT-PER5-DDBXD	277	WALL
SD	4	5K LED	57,300	545W	(1) @ 90°, LED AREA LUMINAIRE, LSI XLCL SERIES, WITH FT (FORWARD THROW) DISTRIBUTION, 277V, WET LISTED, COLOR=BLACK. MOUNT AT 90° ON 30' ROUND TAPERED ALUMINUM POLE RTA30-8E-DM19AS-DDBXD.	LSI, XLCL-FT-LED-HO-CW-UE	277	POLE
SD(1)	1	5K LED	57,300	545W	(2) @ 90°, LED AREA LUMINAIRE, LSI XLCL SERIES, WITH FT (FORWARD THROW) DISTRIBUTION, 277V, WET LISTED, COLOR=BLACK. MOUNT AT 90° ON 30' ROUND TAPERED ALUMINUM POLE RTA30-8E-DM19AS-DDBXD.	LSI, XLCL-FT-LED-HO-CW-UE	277	POLE
SE	68	5K LED	10,500	74W	LED SURFACE MOUNT, STANDARD SYMMETRIC DISTRIBUTION, 277V, 5000K, WET LOCATION LISTED, COLOR = WHITE	LSI, CRUS SM-SC-LED-LW-50-UE-WHT-DFL	277	SURFACE MOUNT ON TRUSS

ISSUE DATE	01/04/2016	SCALE	1" = 60'	CTR INT.	2'
SURVEYED BY		CHECKED BY			
DRAWN BY	CGM / BWS	APPROVED BY	KJB / MJB		

REV	DATE	DESCRIPTION	DWN BY	DES BY	CHK BY	APP BY

Diversified Engineering Inc.
CONSULTING ENGINEERS & SURVEYORS
1776 RAY AVENUE, N.E.
NEW PHILADELPHIA, OH 44663
Phone: (330) 364-5531
Fax: (330) 364-5533
e-mail: dei@de-eng.com
Web: www.de-eng.com

WASTE MANAGEMENT

PROJECT: TRUCK MAINTENANCE FACILITY
GERMANTOWN, WI

SHEET TITLE: CONDITIONAL USE PERMIT
PROPOSED LIGHTING/PHOTOMETRIC PLAN

SHEET NO: X1.0

JOB NO: ENG-1465

PLANNED DEVELOPMENT DISTRICT (PDD)

3/11/19 Plan Commission Meeting

Wrenwood
Carity Land Corporation / Briscoe Development & Management Inc.

Village Planner Report **Germantown, Wisconsin**

Summary

Neumann Companies Inc., agent for Bill Carity, Carity Land Corp, and Briscoe Development & Management Inc., property owner, is seeking approval of amendments to the Wrenwood Planned Development District (PDD) General Development Plan and Conditions & Restrictions Resolution affecting the multi-family condominium component of the Wrenwood residential development.

Property Location: Freistadt Road, Mequon Road & Country Aire Drive

Applicant/
Property Owner:

Bryan Lindgren
Neumann Companies Inc.
N27W24025 Paul Ct
Pewaukee, WI

Michael Briscoe
Briscoe Development & Mgmt
250 Executive Drive Ste 301
Brookfield, WI

Current Zoning: Rs-5: Single-Family Residential & Rm-2: Multi-Family Residential

Adjacent Land Uses		Zoning
North	Residential	Rs-1
South	Residential/Industrial	Rs-2/M-1
East	Residential/Agricultural	A-1/Rs-2
West	Residential/Agricultural/Industrial	Rs-5/A-1/M-2

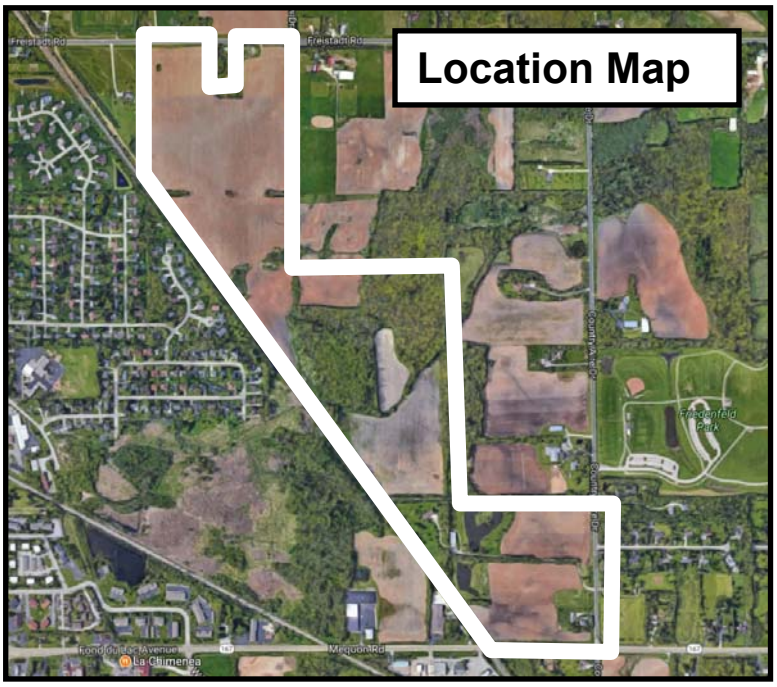

Background

In April 2018, Carity Land Corp. and Briscoe Development obtained approval for the Wrenwood Planned Development District (PDD) with specific conditions and restrictions governing use and development adopted by Resolution No. 28-2018 (copy attached). The preliminary subdivision plat was subsequently approved in August 2018.

As shown on the attached Wrenwood General Development Plan (GDP), the residential development was approved for a total of 202 total residential units, including: 142 single-family residential lots and a maximum 60 multi-family condominium units.

The Wrenwood development is comprised of two (2) primary clusters of development bisected by a large environmental corridor through the middle of the property. A total of 95 single-family lots are approved for the north cluster with access (only) to Freistadt Road to the north. The remaining 47 single-family lots and the 60-unit condominium area is approved for the south cluster with access (only) to Country Aire Drive. Access between the north and south residential clusters and throughout the environmental corridor and “central park” area is provided by a pedestrian trail.

Proposal

At this time, Neumann Companies Inc., a prospective developer preparing to acquire and develop a portion of the Wrenwood project and agent for the current owner & developer, Carity Land Corp and Briscoe Development, is seeking approval of amendments to the Wrenwood General Development Plan (GDP) and the Conditions & Restrictions resolution affecting the land uses in and building setback for the multi-family condominium area of the development. As indicated in the application and supporting documents, Neumann Companies proposes to revise the GDP and conditions & restrictions to:

1. Add “a clubhouse building with outdoor amenity” to the list of allowable uses (amendment to Condition No. 2);
2. Reduce the minimum front/street yard building setback for the multi-family condominium buildings from 35 to 25 feet (amendment to Condition No. 10);

NOTE: Neumann has submitted a concept plan for the condominium component of the development that indicates a reduction in the total number of condominium units allowed under the Wrenwood PDD from 60 to 44 units. However, since the PDD currently allows “no more than sixty (60) multi-family dwelling units…”, the construction of 44 units is consistent with the PDD conditions & restrictions and, therefore, there’s no reason to amend the PDD for this particular change.

Staff Comments

As stated in Section 17.27 of the Zoning Code, the overall intent of the Planned Development (PD) overlay District is to *"…permit greater flexibility…more creative design…while providing a higher level of amenities…while providing the Village with assurances that the project will retain the character envisioned at the time of approval".*

Under Section 17.27(9) of the Zoning Code, the Plan Commission is required to determine if the proposed amendments are "minor", or, if the proposed amendments are "substantial" enough so as to "…materially affect the intended design of the project and the impact of the project on neighboring uses". A finding that the change is a "minor" change means that the Plan Commission recommendation can be considered by the Village Board without first being presented for public hearing. A finding that the change is "substantial" requires a public hearing before the Village Board can render a decision on the proposed change.

In anticipation of a finding that the proposed amendments are "significant", staff has scheduled a public hearing of the proposed amendments. Consequently, regardless of the Plan Commission's findings, the Village Board will be able to consider and act on the proposed amendments.

Amendment 1: ***Add "a clubhouse building with outdoor amenity" to the list of allowable uses under Condition No. 2***

As noted in the application, Neumann explains that a clubhouse with an outdoor amenity is a desirable feature for condominium residents. It will provide a gathering space for resident and condominium community activities. Although "non-commercial clubs, fraternities, lodges and meeting places" can be allowed with a conditional use permit, staff supports adding a clubhouse as a permitted accessory use to the condominium development provided that:

1. The clubhouse is not used for commercial purposes;
2. The building design, architecture and materials are comparable to those used for the condominium buildings;
3. Construction of the clubhouse commences no later than occupancy of the 22nd condominium dwelling unit.

Amendment 2: ***Reduce the minimum front/street yard building setback for the multi-family condominium buildings from 35 feet to 25 feet under Condition No. 10***

The Rm-2: Multi-Family Zoning District has a "standard" minimum front/street yard building setback of 35 feet. Neumann explains that the reduced setback will enable construction of the building to be closer to the internal roadway (Glenwood Court) and, in so doing, further away from the proposed single-family dwellings in Wrenwood and the existing two-family dwelling not part of the Wrenwood development near the Country Aire intersection. The reduced setback also provides greater flexibility for overall site design and layout of the condominium buildings and buffering around the perimeter (see attached "Proposed Site Plan" dated 1-18-2019).

Staff supports the reduced front/street yard setback to create more flexibility for the overall site design, building layout and perimeter landscape berming & buffering.

Overall, the proposed amendments are consistent with the intent of what a PDD is to be used for: improved site design and flexibility. The amendments really only affect the relative location and appearance of the proposed buildings. The amendments do NOT increase or otherwise affect density of the development as previously approved.

With that said, staff recommends an additional amendment to add the proposed "Site Plan" for the condominium area as an addendum to the General Development Plan (GDP). This plan effectively locks in the relative location and orientation of the proposed multi-family buildings and clubhouse.

Fire Department
No comment.

Public Works Department/Village Engineer
No comment.

Village Planner Recommendation

FIND that the proposed amendments collectively constitute a substantial change such that a public hearing of the proposed amendments is warranted as a prerequisite for any Village Board consideration and action on the proposed amendments.

APPROVE the proposed amendments to the Wrenwood Planned Development District (PDD) General Development Plan AND Conditions & Restrictions Resolution as proposed subject to the following conditions:

1. The clubhouse is not made available for commercial purposes;
2. The building design, architecture and materials are comparable to those used for the condominium buildings;
3. Construction of the clubhouse commences no later than occupancy of the 22nd condominium dwelling unit.
4. The "Proposed Site Plan" dated 1-18-2019 shall be made part of the General Development Plan (GDP).

Village of

Germantown

Willkommen

Fee Must Accompany Application

☐ $820 Paid _____Date_____

☐ $200 PC Consultation Only

Paid _____Date_____

PLANNED DEVELOPMENT DISTRICT (PDD) AMENDMENT APPLICATION

Applications NOT signed by the Property Owner(s) will not be accepted. Attach additional sheets and/or include supplemental information in support of your application.

APPLICANT OR AGENT:

Bill Carity

Neumann Developments Inc. - Bryan Lindgren

Address: 12730 W. North Ave

Brookfield, WI 53005

Phone: 262-785-1968

FAX:

E-Mail: carityland@sbcglobal.net

blindgren@neumanncompanies.com

PROPERTY OWNER(S):

Michael S. Briscoe

Address: 250 S. Executive Dr #300

Brookfield, WI 53005

Phone: 414-861-1988

FAX:

E-Mail: mike@briscoedev.com

PDD Name & Resolution No.:

Wrenwood PDD Resolution No. 28-2018

Legal Description of Property or Area (metes and bounds description):

Attach separate legal description if necessary

Attached

Check all that apply:

☐ **REQUEST TO AMEND PDD ZONING**

☒ **REQUEST TO AMEND PDD GENERAL DEVELOPMENT PLAN**

☒ **REQUEST TO AMEND PDD CONDITIONS & RESTRICTIONS**

List of Proposed Amendment(s) (include Resolution # and Condition #):

Attach Revised Plan(s) or Separate Pages as Necessary

We propose to amend the following conditions of the Wrenwood Plan Development District "Wrenwood PDD", Resolution No. 28-2018

Condition 2: A permitted Principal/Accessory use for the Rm-2 Residential Multi-Family Zoning district of the GDP to include a clubhouse building with outdoor amenity at the corner of Wrenwood Dr. and Glenwood Ct for use by the Condominium residents

Condition 10b.: Add item ii. Principal Building Setbacks (minimum)
1. Front Yard 25 feet

Detailed Explanation and Justification for Proposed Amendment(s):

Attach Revised Plan(s) or Separate Pages as Necessary

We would like to amend Condition 2 as it is in our experience, and a request of our builder partner for the condominiums, that a clubhouse with outdoor amenity is a desirable feature for future residents of the condominium homes. This will provide a space for residents to gather, for community activities, and for future residents to host guests when additional space is needed.

We would like to amend condition 10 to reduce the front yard setback for the condominium buildings to 25 feet which will shorten the driveways saving up front costs as well as saving future maintenance cost for future residents. Also, reducing the front setback would allow the units to be pulled further from the existing residence, future single family residences, and the busier roads surrounding the property, creating a larger desirable buffer around the units. Additionally there are challenges in getting storm water flows behind the buildings to the treatment areas in the southwest of the development, and allowing the units to be moved toward the internal road would provide added space behind the units to be used for storm water purposes.

Thank you for your consideration.

APPLICATION SUBMITTAL REQUIREMENTS (to be submitted at time of application):

All Amendment Applications:

- ☐ Complete Application Form (Affidavit of Understanding and signatures required)
- ☐ Application Fee
- ☐ Detailed explanation of and justification for proposed amendment(s)
- ☐ Detailed explanation of if and how the proposed amendment(s) will affect other aspects of the development included within the PDD

General Development Plan Amendment Only:

- ☐ Legal Description of the land subject of map amendment in electronic/digital file format (e.g. Microsoft Word)
- ☐ Revised or New General Development Plan at a scale of 1" = 50' or other suitable scale necessary to accurately present:
  - Exterior boundary of the land subject of the map amendment
  - All existing and/or proposed features to be included in the development

AFFIDAVIT OF UNDERSTANDING

Please read and indicate that you understand and agree to the following (initials in box):

BL I understand that Village Staff, the Plan Commission and/or the Village Board may request additional information to properly evaluate this application and failure to provide such information may be sufficient justification to deny this application;

BL I understand that, regardless of the justification and/or information provided in support of my application, the Village is not obligated to approve my application nor amend the PDD as requested;

BL I am aware that the approval of an application to amend a PDD only amends the General Development Plan and/or conditions & Restrictions Resolution and does not otherwise revise or change the zoning of the land affected by the amendment(s), and, I may be required to obtain separate permits and/or approvals (e.g. site plan, building permits, etc.) from the Village or other agencies as a prerequisite to actual or continued development of such land.

ALL APPLICATIONS MUST BE SIGNED BY THE APPLICANT/AGENT ~~AND PROPERTY~~ OWNER(S)

Applicant/Agent	1-11-19 Date	Property Owner	1/11/2019 Date
Applicant/Agent	Date	Property Owner	Date

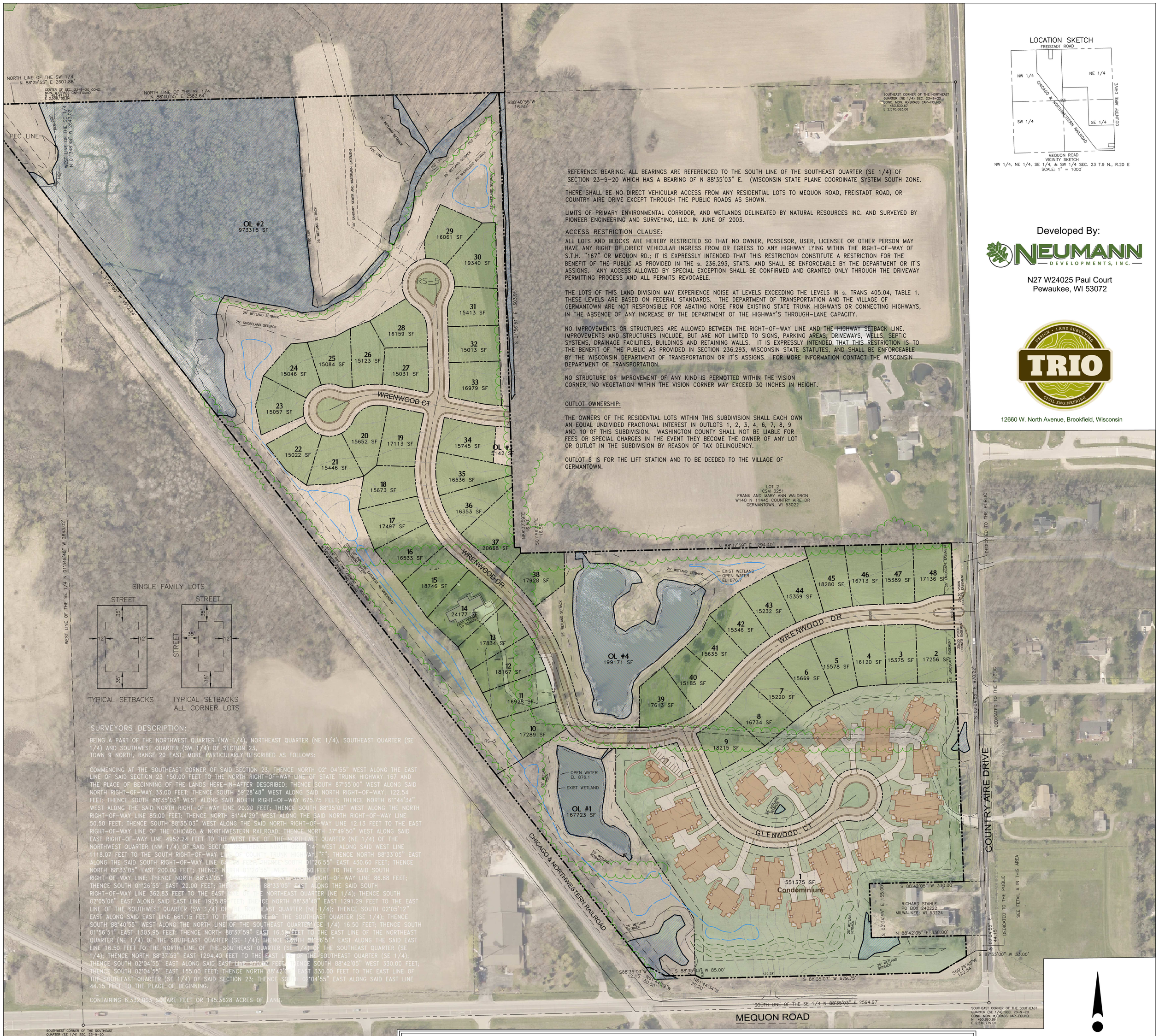

REFERENCE BEARING: ALL BEARINGS ARE REFERENCED TO THE SOUTH LINE OF THE SOUTHEAST QUARTER (SE 1/4) OF SECTION 23-9-20 WHICH HAS A BEARING OF N 88°35'03" E. (WISCONSIN STATE PLANE COORDINATE SYSTEM SOUTH ZONE.

THERE SHALL BE NO DIRECT VEHICULAR ACCESS FROM ANY RESIDENTIAL LOTS TO MEQUON ROAD, FREISTADT ROAD, OR COUNTRY AIRE DRIVE EXCEPT THROUGH THE PUBLIC ROADS AS SHOWN.

LIMITS OF PRIMARY ENVIRONMENTAL CORRIDOR, AND WETLANDS DELINEATED BY NATURAL RESOURCES INC. AND SURVEYED BY PIONEER ENGINEERING AND SURVEYING, LLC. IN JUNE OF 2003.

ACCESS RESTRICTION CLAUSE:

ALL LOTS AND BLOCKS ARE HEREBY RESTRICTED SO THAT NO OWNER, POSSESOR, USER, LICENSEE OR OTHER PERSON MAY HAVE ANY RIGHT OF DIRECT VEHICULAR INGRESS FROM OR EGRESS TO ANY HIGHWAY LYING WITHIN THE RIGHT-OF-WAY OF S.T.H. "167" OR MEQUON RD.; IT IS EXPRESSLY INTENDED THAT THIS RESTRICTION CONSTITUTE A RESTRICTION FOR THE BENEFIT OF THE PUBLIC AS PROVIDED IN THE s. 236.293, STATS. AND SHALL BE ENFORCEABLE BY THE DEPARTMENT OR IT'S ASSIGNS. ANY ACCESS ALLOWED BY SPECIAL EXCEPTION SHALL BE CONFIRMED AND GRANTED ONLY THROUGH THE DRIVEWAY PERMITTING PROCESS AND ALL PERMITS REVOCABLE.

THE LOTS OF THIS LAND DIVISION MAY EXPERIENCE NOISE AT LEVELS EXCEEDING THE LEVELS IN s. TRANS 405.04, TABLE 1. THESE LEVELS ARE BASED ON FEDERAL STANDARDS. THE DEPARTMENT OF TRANSPORTATION AND THE VILLAGE OF GERMANTOWN ARE NOT RESPONSIBLE FOR ABATING NOISE FROM EXISTING STATE TRUNK HIGHWAYS OR CONNECTING HIGHWAYS, IN THE ABSENCE OF ANY INCREASE BY THE DEPARTMENT OT THE HIGHWAY'S THROUGH-LANE CAPACITY.

NO IMPROVEMENTS OR STRUCTURES ARE ALLOWED BETWEEN THE RIGHT-OF-WAY LINE AND THE HIGHWAY SETBACK LINE. IMPROVEMENTS AND STRUCTURES INCLUDE, BUT ARE NOT LIMITED TO SIGNS, PARKING AREAS, DRIVEWAYS, WELLS, SEPTIC SYSTEMS, DRAINAGE FACILITIES, BUILDINGS AND RETAINING WALLS. IT IS EXPRESSLY INTENDED THAT THIS RESTRICTION IS TO THE BENEFIT OF THE PUBLIC AS PROVIDED IN SECTION 236.293, WISCONSIN STATE STATUTES, AND SHALL BE ENFORCEABLE BY THE WISCONSIN DEPARTMENT OF TRANSPORTATION OR IT'S ASSIGNS. FOR MORE INFORMATION CONTACT THE WISCONSIN DEPARTMENT OF TRANSPORTATION.

NO STRUCTURE OR IMPROVEMENT OF ANY KIND IS PERMOTTED WITHIN THE VISION CORNER, NO VEGETATION WITHIN THE VISION CORNER MAY EXCEED 30 INCHES IN HEIGHT.

OUTLOT OWNERSHIP:

THE OWNERS OF THE RESIDENTIAL LOTS WITHIN THIS SUBDIVISION SHALL EACH OWN AN EQUAL UNDIVIDED FRACTIONAL INTEREST IN OUTLOTS 1, 2, 3, 4, 6, 7, 8, 9 AND 10 OF THIS SUBDIVISION. WASHINGTON COUNTY SHALL NOT BE LIABLE FOR FEES OR SPECIAL CHARGES IN THE EVENT THEY BECOME THE OWNER OF ANY LOT OR OUTLOT IN THE SUBDIVISION BY REASON OF TAX DELINQUENCY.

OUTLOT 5 IS FOR THE LIFT STATION AND TO BE DEEDED TO THE VILLAGE OF GERMANTOWN.

SURVEYORS DESCRIPTION:

BEING A PART OF THE NORTHWEST QUARTER (NW 1/4), NORTHEAST QUARTER (NE 1/4), SOUTHEAST QUARTER (SE 1/4) AND SOUTHWEST QUARTER (SW 1/4) OF SECTION 23, TOWN 9 NORTH, RANGE 20 EAST, MORE PARTICULARLY DESCRIBED AS FOLLOWS:

COMMENCING AT THE SOUTHEAST CORNER OF SAID SECTION 23; THENCE NORTH 02° 04'55" WEST ALONG THE EAST LINE OF SAID SECTION 23 150.00 FEET TO THE NORTH RIGHT-OF-WAY LINE OF STATE TRUNK HIGHWAY 167 AND THE PLACE OF BEGINNING OF THE LANDS HERE-IN-AFTER DESCRIBED; THENCE SOUTH 87°55'00" WEST ALONG SAID NORTH RIGHT-OF-WAY 33.00 FEET; THENCE SOUTH 59°28'48" WEST ALONG SAID NORTH RIGHT-OF-WAY, 122.54 FEET; THENCE SOUTH 88°35'03" WEST ALONG SAID NORTH RIGHT-OF-WAY 675.75 FEET; THENCE NORTH 61°44'34" WEST ALONG THE SAID NORTH RIGHT-OF-WAY LINE 20.20 FEET; THENCE SOUTH 88°35'03" WEST ALONG THE NORTH RIGHT-OF-WAY LINE 85.00 FEET; THENCE NORTH 61°44'29" WEST ALONG THE SAID NORTH RIGHT-OF-WAY LINE 50.50 FEET; THENCE SOUTH 88°35'03" WEST ALONG THE SAID NORTH RIGHT-OF-WAY LINE 12.13 FEET TO THE EAST RIGHT-OF-WAY LINE OF THE CHICAGO & NORTHWESTERN RAILROAD; THENCE NORTH 37°49'50" WEST ALONG SAID EAST RIGHT-OF-WAY LINE 4952.24 FEET TO THE WEST LINE OF THE NORTHEAST QUARTER (NE 1/4) OF THE NORTHWEST QUARTER (NW 1/4) OF SAID SECTION 23; THENCE NORTH 01°48'14" WEST ALONG SAID WEST LINE 1118.07 FEET TO THE SOUTH RIGHT-OF-WAY LINE OF COUNTY TRUNK HIGHWAY "F"; THENCE NORTH 88°33'05" EAST ALONG THE SAID SOUTH RIGHT-OF-WAY LINE 64.24 FEET; THENCE SOUTH 01°26'55" EAST 430.60 FEET; THENCE NORTH 88°33'05" EAST 200.00 FEET; THENCE NORTH 01°26'55" WEST 45.60 FEET TO THE SAID SOUTH RIGHT-OF-WAY LINE; THENCE NORTH 88°33'05" EAST ALONG THE SAID SOUTH RIGHT-OF-WAY LINE 86.88 FEET; THENCE SOUTH 01°26'55" EAST 22.00 FEET; THENCE NORTH 88°33'05" EAST ALONG THE SAID SOUTH RIGHT-OF-WAY LINE 362.83 FEET TO THE EAST LINE OF THE NORTHEAST QUARTER (NE 1/4); THENCE SOUTH 02°05'06" EAST ALONG SAID EAST LINE 1925.89 FEET; THENCE NORTH 88°38'40" EAST 1291.29 FEET TO THE EAST LINE OF THE SOUTHWEST QUARTER (SW 1/4) OF THE NORTHEAST QUARTER (NE 1/4); THENCE SOUTH 02°05'12" EAST ALONG SAID EAST LINE 661.15 FEET TO THE NORTH LINE OF THE SOUTHEAST QUARTER (SE 1/4); THENCE SOUTH 88°40'55" WEST ALONG THE NORTH LINE OF THE SOUTHEAST QUARTER (SE 1/4) 16.50 FEET; THENCE SOUTH 01°56'51" EAST 1303.95 FEET; THENCE NORTH 88°37'59" EAST 16.50 FEET TO THE EAST LINE OF THE NORTHEAST QUARTER (NE 1/4) OF THE SOUTHEAST QUARTER (SE 1/4); THENCE SOUTH 01°56'51" EAST ALONG THE SAID EAST LINE 16.50 FEET TO THE NORTH LINE OF THE SOUTHEAST QUARTER (SE 1/4) OF THE SOUTHEAST QUARTER (SE 1/4); THENCE NORTH 88°37'59" EAST 1294.40 FEET TO THE EAST LINE OF THE SOUTHEAST QUARTER (SE 1/4); THENCE SOUTH 02°04'55" EAST ALONG SAID EAST LINE 970.22 FEET; THENCE SOUTH 88°42'05" WEST 330.00 FEET; THENCE SOUTH 02°04'55" EAST 155.00 FEET; THENCE NORTH 88°42'05" EAST 330.00 FEET TO THE EAST LINE OF THE SOUTHEAST QUARTER (SE 1/4) OF SAID SECTION 23; THENCE SOUTH 02°04'55" EAST ALONG SAID EAST LINE 44.15 FEET TO THE PLACE OF BEGINNING.

CONTAINING 6,332,003 SQUARE FEET OR 145.3628 ACRES OF LAND.

Developed By:

NEUMANN DEVELOPMENTS, INC.

N27 W24025 Paul Court
Pewaukee, WI 53072

TRIO DESIGN • LAND SURVEYING • CIVIL ENGINEERING

12660 W. North Avenue, Brookfield, Wisconsin

General Development Plan

"Wrenwood"

Village of Germantown, Wisconsin

DEVELOPMENT SUMMARY

Residential Development: 142 single family lots
44 condominium units

Total Area: 145.36 acres
Overall Average Lot Size: 17,403 s.f.

Single Family Setbacks:
Front Yard: = 35'
Side Yard: = 12'
Rear Yard: = 35'

SOUTH AREA

Single Family = 47 lots
Minimum Lot Width = 90' at front setback
Minimum Lot Size = 15,000 s.f.
Average Lot Size = 16,589 s.f.

Condominium = 44 units
15 buildings
+ Clubhouse & Site Amenity Area

NORTH AREA

Single Family = 95 lots
Minimum Lot Width = 90' at front setback
Minimum Lot Size = 15,000 s.f.
Average Lot Size = 17,806 s.f.

0 50 100 200

Scale: 1" = 100' (34"X34")

Scale: 1" = 200' (17"X17")

DATE: 01-18-2019

h:\-6801\853\70137-01\wrenwood.dwg

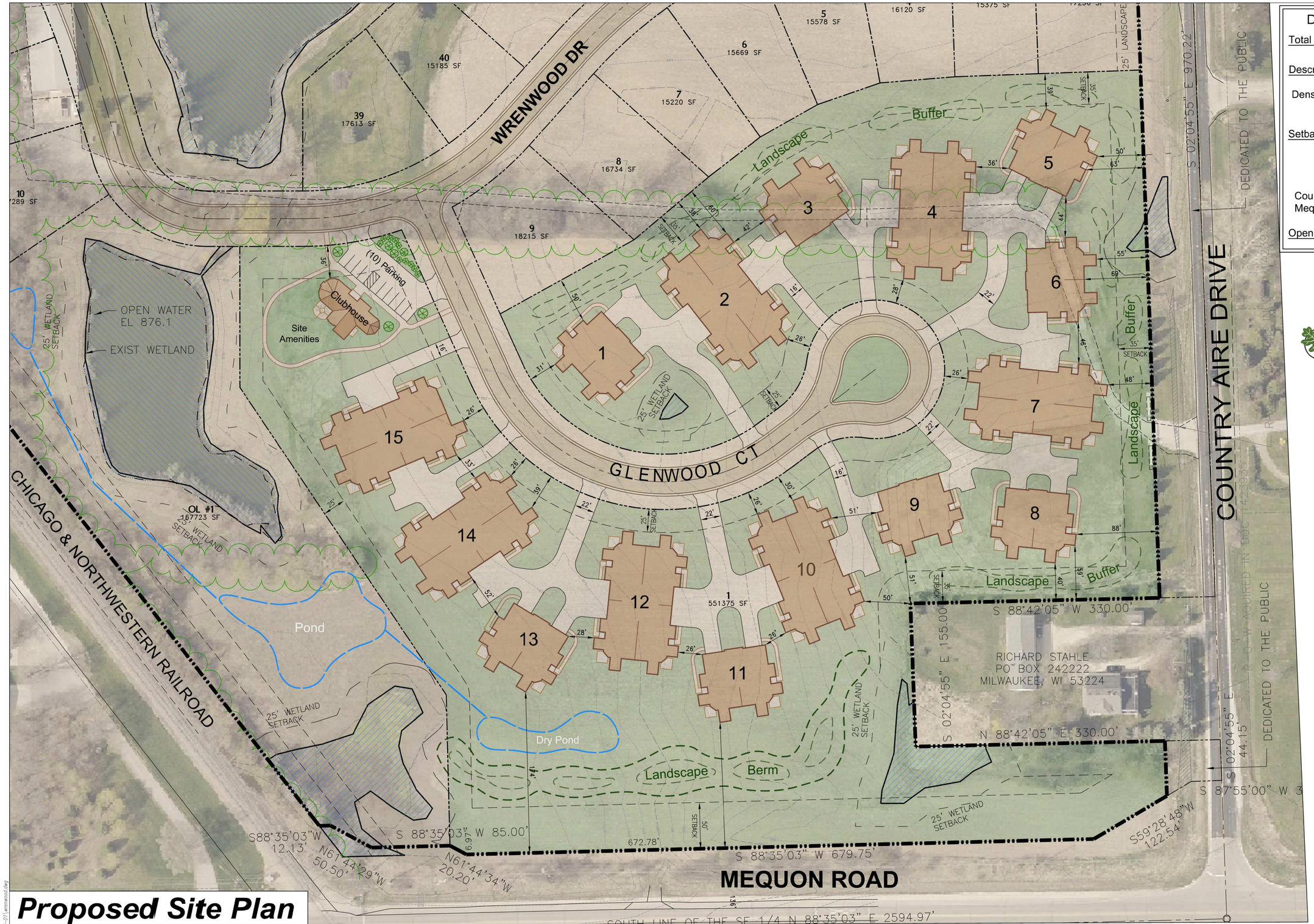

Proposed Site Plan

The Glen at Wrenwood - A Condominium Community

Village of Germantown, Wisconsin

DEVELOPMENT SUMMARY

Total Area (Lot 1)	12.66 acres (Wetland = 0.2 acres)
Description:	44 unit (15 buildings) Condominium Community
Density:	3.47 units/acre

Setbacks (per PDD):

Front Yard:	= 25'
Side Yard:	= 25'
Rear Yard:	= 35'
Building - Building:	= 25'
Country Aire Dr:	= 35'
Mequon Rd:	= 50'

Open Space: 8.1 acres (64% of site)

Developed By:

NEUMANN DEVELOPMENTS, INC.

N27 W24025 Paul Court
Pewaukee, WI 53072

TRIO DESIGN · LAND SURVEYING · CIVIL ENGINEERING

12660 W. North Avenue, Brookfield, Wisconsin

0 25 50 100

Scale: 1" = 50' (22"X34")

Scale: 1" = 100' (11"X17")

DATE: 01-18-2019

EXHIBIT "A"

"WRENWOOD"

BEING A PART OF THE SOUTHEAST 1/4, NORTHEAST 1/4, NORTHWEST 1/4, AND THE SOUTHWEST OF SECTION 23, TOWN 9 NORTH, RANGE 20 EAST, IN THE VILLAGE OF GERMANTOWN, WASHINGTON COUNTY, WISCONSIN.

LINE TABLE:

Line #	BEARING	LENGTH
L1	N2°04'55"W	150.00'
L2	S87°55'00"W	33.00'
L3	S59°28'48"W	122.54'
L4	S88°35'03"W	679.75'
L5	N61°44'34"W	20.20'
L6	S88°35'03"W	85.00'
L7	N61°44'29"W	50.50'
L8	S88°35'03"W	12.13'
L9	N88°33'05"E	86.88'
L10	S1°26'55"E	22.00'
L11	N88°37'59"E	16.50'
L12	S1°56'51"E	16.50'
L13	S88°42'05"W	330.00'
L14	S2°04'55"E	155.00'
L15	N88°42'05"E	330.00'

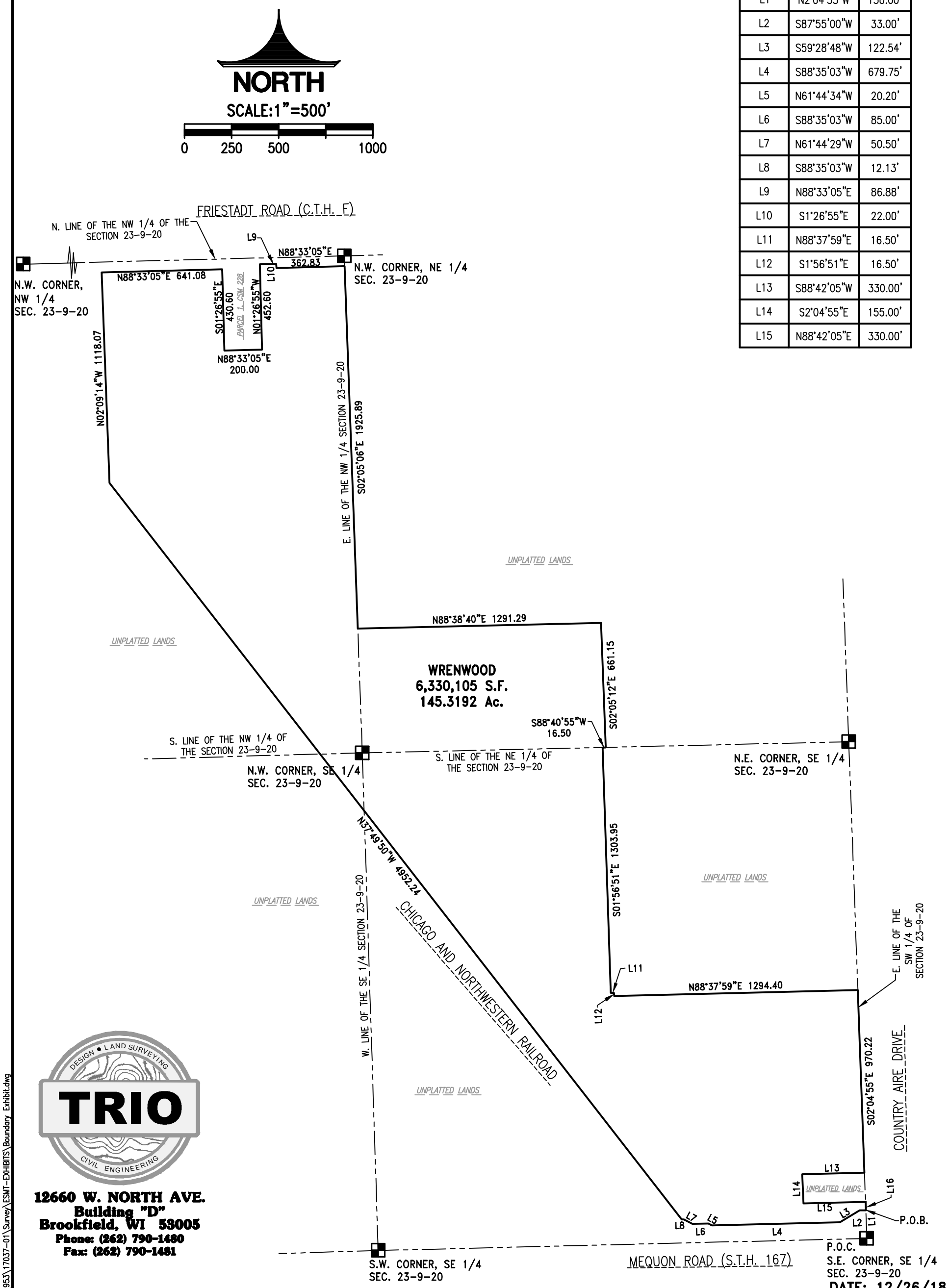

TRIO
DESIGN • LAND SURVEYING
CIVIL ENGINEERING
12660 W. NORTH AVE.
Building "D"
Brookfield, WI 53005
Phone: (262) 790-1480
Fax: (262) 790-1481

DATE: 12/26/18

THIS EXHIBIT WAS PREPARED BY TRIO ENGINEERING, LLC.

SHEET 1 OF 1

H:\C900\953\17037-01\Survey\ESMT-EXHIBITS\Boundary Exhibit.dwg

WRENWOOD SUBDIVISION

Being a part of the Northwest 1/4, Northeast 1/4, Southeast 1/4 and Southwest 1/4 of Section 23, Town 9 North, Range 20 East, Village of Germantown, Washington County, Wisconsin. Being more particularly described as follows:

Commencing at the Southeast Corner of said Southeast 1/4, Thence North 02°04'55" West along the East line of said Southeast 1/4, 150.00 feet to the North Right-of-Way line of State Trunk Highway “167” and the place of beginning of the lands hereinafter described.

Thence South 87°55'00" West along said North line, 33.00 feet to a point; Thence South 59°28'48" West along said North line, 122.54 feet to a point; Thence South 88°35'03" West along said North line, 679.75 feet; Thence North 61°44'34" West along said North line, 20.20 feet to a point; Thence South 88°35'03" West along said North line, 85.00 feet to a point; Thence North 61°44'29" West along said North line, 50.50 feet to a point; Thence South 88°35'03" West along said North line, 12.13 feet to a point on the East Right-of-Way line of the “Chicago & Northwestern Railroad; Thence North 37°49'50" West along said East line, 4952.24 feet to the West line of the Northeast 1/4 of the Northwest 1/4 of said Section 23; Thence North 02°09'14" West along said West line, 1118.07 feet to the South Right-of-Way line of County Trunk Highway "F"; Thence North 88°33'05" East along said South line, 641.08 feet to a point on the West line of Certified Survey Map Number 228; Thence South 01°26'55" East along said West line, 430.60 feet to a point on the South line of said Certified Survey Map; Thence North 88°33'05" East along said South line, 200.00 feet to a point on the East line of said Certified Survey Map; Thence North 01°26'55" West along said East line, 452.60 feet to the South Right-of-Way line County Trunk Highway "F"; Thence North 88°33'05" East along said South line, 86.88 feet to a point; Thence South 01°26'55" East along said South line, 22.00 feet to a point; Thence North 88°33'05" East along said South line, 362.83 feet to the East line of the Northeast 1/4 of said Section 23; Thence South 02°05'06" East along said East line, 1925.89 feet to a point; Thence North 88°38'40" East 1291.29 feet to the East line of the Southwest 1/4 of the Northeast 1/4 of said Section 23; Thence South 02°05'12" East along said East line, 661.15 feet to the North line of the Southeast 1/4 of said Section 23; Thence South 88°40'55" West said North line, 16.50 feet to a point; Thence South 01°56'51" East 1303.95 feet to a point; Thence North 88°37'59" East 16.50 feet to the East line of the Northeast 1/4 of the Southeast 1/4; Thence South 01°56'51" East along said East line, 16.50 feet to the North line of the Southeast 1/4 of the Southeast 1/4; Thence North 88°37'59" East along said North line, 1294.40 feet to the East line of the Southeast 1/4; Thence South 02°04'55" East along said East line, 970.22 feet to a point; Thence South 88°42'05" West 330.00 feet to a point; Thence South 02°04'55" East 155.00 feet to a point; Thence North 88°42'05" East

330.00 feet to the East line of the Southeast 1/4 of said Section 23; Thence South 02°04'55" East along said East line, 44.15 feet to the point of beginning.

Said Parcel contains 6,330,105 Square Feet of 145.3192 Acres of land more of less.

VILLAGE OF GERMANTOWN
WASHINGTON COUNTY

RESOLUTION NO. 28-2018

ADOPTING CONDITIONS AND RESTRICTIONS
FOR THE WRENWOOD PLANNED DEVELOPMENT DISTRICT
("WRENWOOD PDD")

WHEREAS, Briscoe Development & Management Inc., property owner (hereinafter the "Developer") has applied for an Rs-5: Residential Single-Family and Rm-2: Residential Multi-Family Planned Development District (Rs-5/Rm-2/PDD) to be applied to the property located in the Village of Germantown as described in Exhibit A attached hereto; and

WHEREAS, Section 17.27(4) of the Village of Germantown Municipal Code allows for the adoption of conditions and restrictions for Planned Development Districts (PDD) that modify the basic allowances, limitations, and bulk regulations of the underlying zoning district, as well as, allow for the establishment of specific uses, bulk regulations, density standards, yard setbacks, etc. to ensure proper development, operation and maintenance of the proposed development in the General Development Plan; and

WHEREAS, the Village of Germantown Plan Commission on February 26, 2018, reviewed the Rs-5/Rm-2/PDD rezoning application and forwarded a positive recommendation regarding both the rezoning and General Development Plan to the Village Board;

NOW, THEREFORE BE IT RESOLVED that the Village Bard of the Village of Germantown hereby adopts the following specific conditions and restrictions that shall apply to all development on and the use of property within the PDD:

1. **GENERAL DEVELOPMENT PLAN (GDP)**. The General Development Plan (Exhibit B dated March 2, 2018) establishes the basic parameters for development within the Wrenwood PDD including the approximate size and orientation of lots, density of development, setbacks, location of internal roadways and intersections to the adjacent road system, and the general location and extent of landscaping, buffering and recreational trails. While all development within the Wrenwood PDD shall be generally consistent with the GDP, the GDP does not grant specific site development or building approval. Subsequent Village approvals shall be required as a prerequisite for development, including but not limited to a subdivision plat and condominium plat.

2. **PERMITTED LAND USES**. Permitted Principal, Accessory, Conditional and Temporary Uses allowed within the Wrenwood PDD shall be as set forth in Rs-5: Residential Single-Family and Rm-2: Residential Multi-Family Zoning Districts Section 17.30 of the Zoning Code.

3. **ACCESS**.
   Access to all development within the Wrenwood PDD shall be limited to/from Freistadt Road and Country Aire Drive as shown on GDP.

4. **Residential Density, Unit Size and Type** — The project shall include a maximum of one-hundred forty-two (142) single-family dwelling units on individual platted lots no smaller than 15,000 square feet, and, no more than sixty (60) multi-family dwelling condominium units in residential buildings containing no more than four (4) condominium dwelling units per building. Development of the single-family residential area(s) shall be approved consistent with and pursuant to the Village's subdivision platting procedures. Development of the multi-family condominium area shall be consistent with and pursuant to the Village's Site Plan and Condominium Plat procedures.

5. **Open Space Ownership and Maintenance** — All open space shown on the General Development Plan shall be owned and maintained by a Homeowners Association in perpetuity. Maintenance guarantees shall be included in the Developer's Agreement.

6. **Street Improvements, Interior Road Construction and Ownership** — All internal roadways intended for dedication shall be approved by the Plan Commission and constructed to standards deemed acceptable to the Department of Public Works. Detailed cross sections shall be approved by the Public Works Committee. Pavement width shall not exceed 36 feet, curb face to curb face, but may be designed to a minimum dimension of 24 feet.

7. **Pedestrian Circulation** — The developer shall install a paved pedestrian path located within the central park/open space area between and connection the north and south residential areas as shown on the GDP. All other pedestrian trails within the development may be gravel or other material deemed acceptable by the Village. The construction of sidewalks along Country Aire Drive, Mequon Road and/or Freistadt Road shall be required as directed by the Village's Public Works Committee consistent with the Village's sidewalk plan.

8. **Specific Lighting and Landscaping Plans** — The developer shall submit specific lighting and landscaping plans and specifications to the Village for final approval prior to final plat approval. Lighting and landscaping including the installation of street trees shall comply with Village guidelines. The General Development Plan shall be used as a guide for the general location and character of landscaping, including location of buffers and street trees. Street lighting shall be installed at all access entrances/intersections along Freistadt Road and Country Aire Drive, and, at all internal road intersections within the development unless otherwise approved by the Village's Public Works Committee. Individual lot and lighting of the condominium area shall be installed as required under the Village's Subdivision Code (or as part of site plan approval by the Plan Commission for the condominium area).

9. **Expiration** — The developer shall obtain appropriate subdivision plat, developer agreement and other Village approvals and permits in a timely manner. If preliminary plat approval for any single-family area, or, a site development plan for the condominium area, whichever comes first, has not been submitted to and approved by the Village of Germantown within two (2) years from the date this PDD amendment has been approved by the Village Board, approval shall be deemed to have expired. If this requirement is not satisfied, the Wrenwood PDD and General Development Plan (GDP) shall become null and void and the property shall revert back to the previous A-1: Agricultural Zoning District.

10. **SITE DEVELOPMENT AND BUILDING REQUIREMENTS.**
Unless otherwise modified as set forth below, all development and building shall be in accordance with the lot, building and other applicable bulk requirements set forth in the applicable underlying Rs-5: Single-Family or Rm-2: Multi-Family Zoning Districts and other applicable Zoning Code regulations:

Modifications to the Rs-5: Single-Family District
a. LOT AND BUILDING REQUIREMENTS
i. Lot Width (minimum) 90 feet
ii. Principal Building Setbacks (minimum)
1. Side Yard 12 feet

Modifications to the Rm-2: Multi-Family District
b. LOT AND BUILDING REQUIREMENTS
i. Lot Size (minimum) None (allow condominium development of entire area provided total number of units does not exceed sixty (60) units; maximum number of buildings does not exceed fifteen (15) and maximum number of units per building does not exceed four (4) units per building

11. **APPLICABILITY OF MUNICIPAL CODE.**
Unless otherwise set forth herein, all other applicable zoning and development regulations contained in the Germantown Municipal Code (e.g. Shoreland-Wetland Zoning, Floodplain Zoning, Subdivision) shall apply to development and land use within the SC-PDD. In the event a requirement, restriction or limitation set forth herein conflicts with a similar requirement, restriction or limitation found in another section of the Municipal Code, the most stringent requirement, restriction or limitation shall apply.

Introduced by: Trustee Baum

Adopted: April 16, 2018

Vote: Ayes: 5 Nays: 2

Dean M. Wolter, Village President

ATTEST:

Deanna L. Boldrey, WCMC/CMC
Village Clerk

EXHIBIT A

Wrenwood Planned Development District (PDD)
Boundary Description

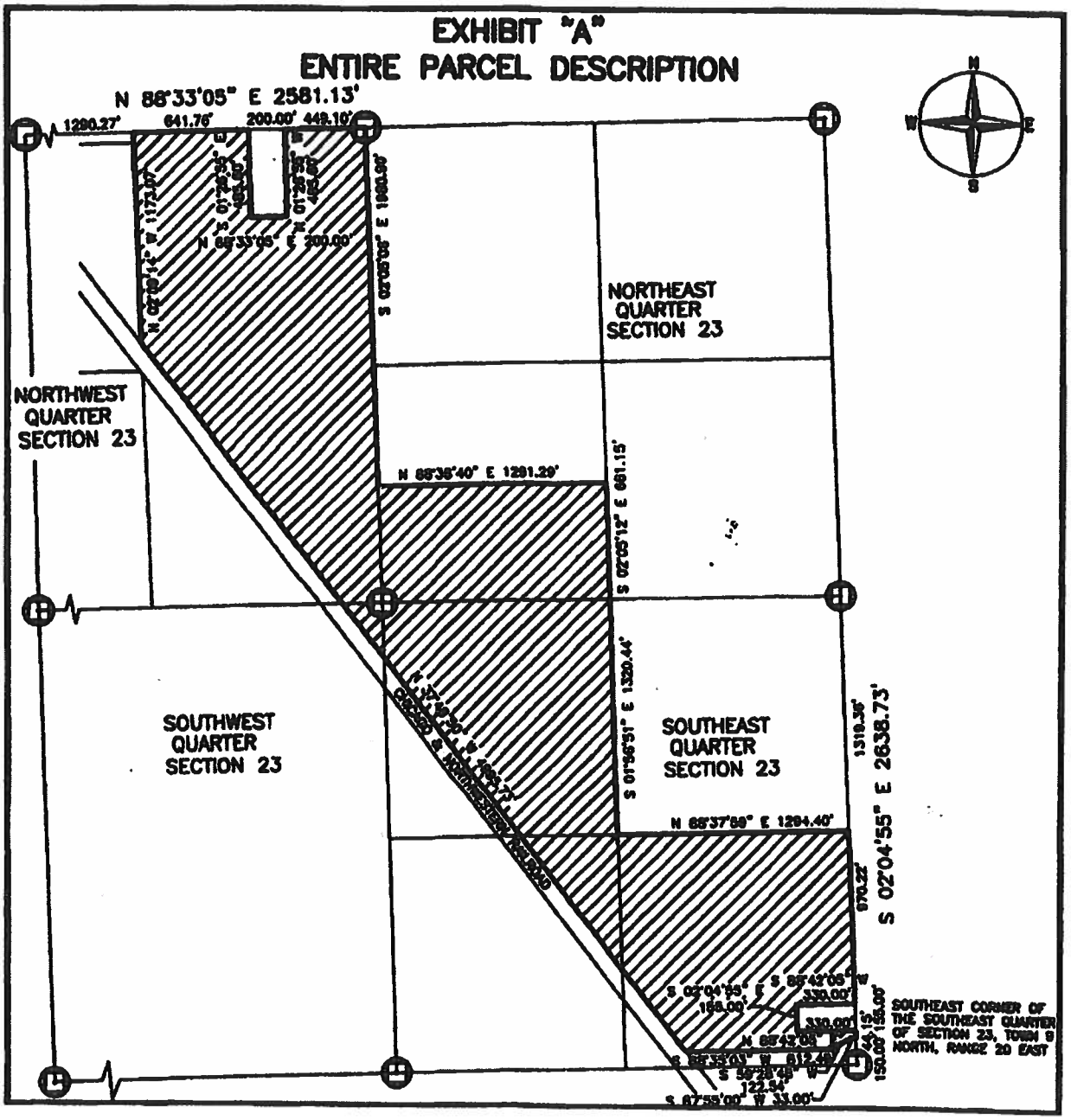

EXHIBIT B

Wrenwood Planned Development District (PDD)
General Development Plan
{See Attach General Development Plan Dated March 2, 2018}

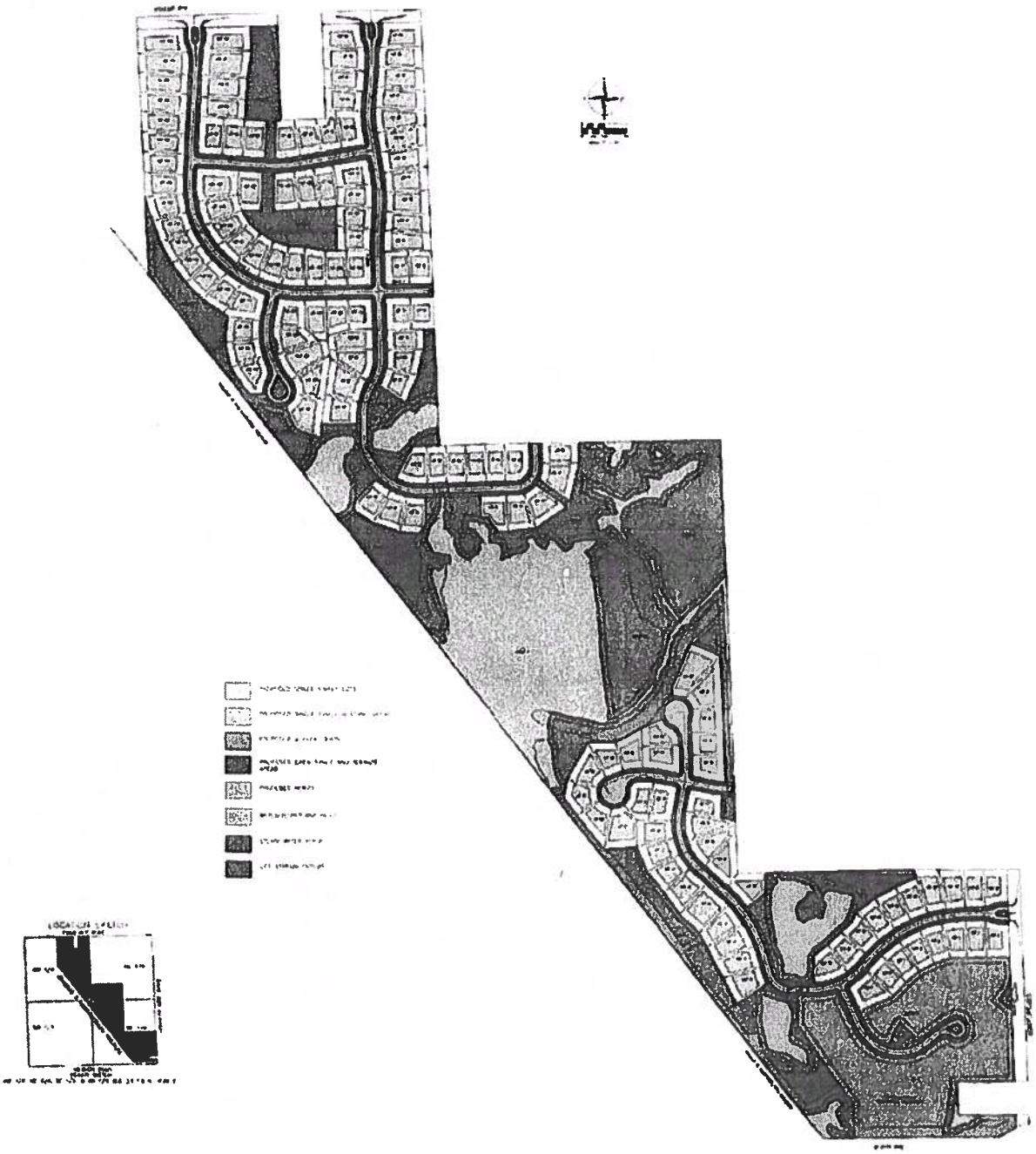

RECEIVED
APR 12 2018
OFFICE OF THE VILLAGE PLANNER
VILLAGE OF GERMANTOWN

APPROVED
☒ Building/Arch Plan ☐ Site Plan
☒ Landscaping Plan ☐ Sign Plan
☒ Lighting Plan ☐ Zoning Permit
4-16-18
Date Approved
Village Planner/Zoning Administrator
☒ Approval Conditions apply as noted below:
GENERAL DEVELOPMENT PLAN FOR WRENWOOD PDD
* SEE RES. NO. 28-2018 FOR CONDITIONS

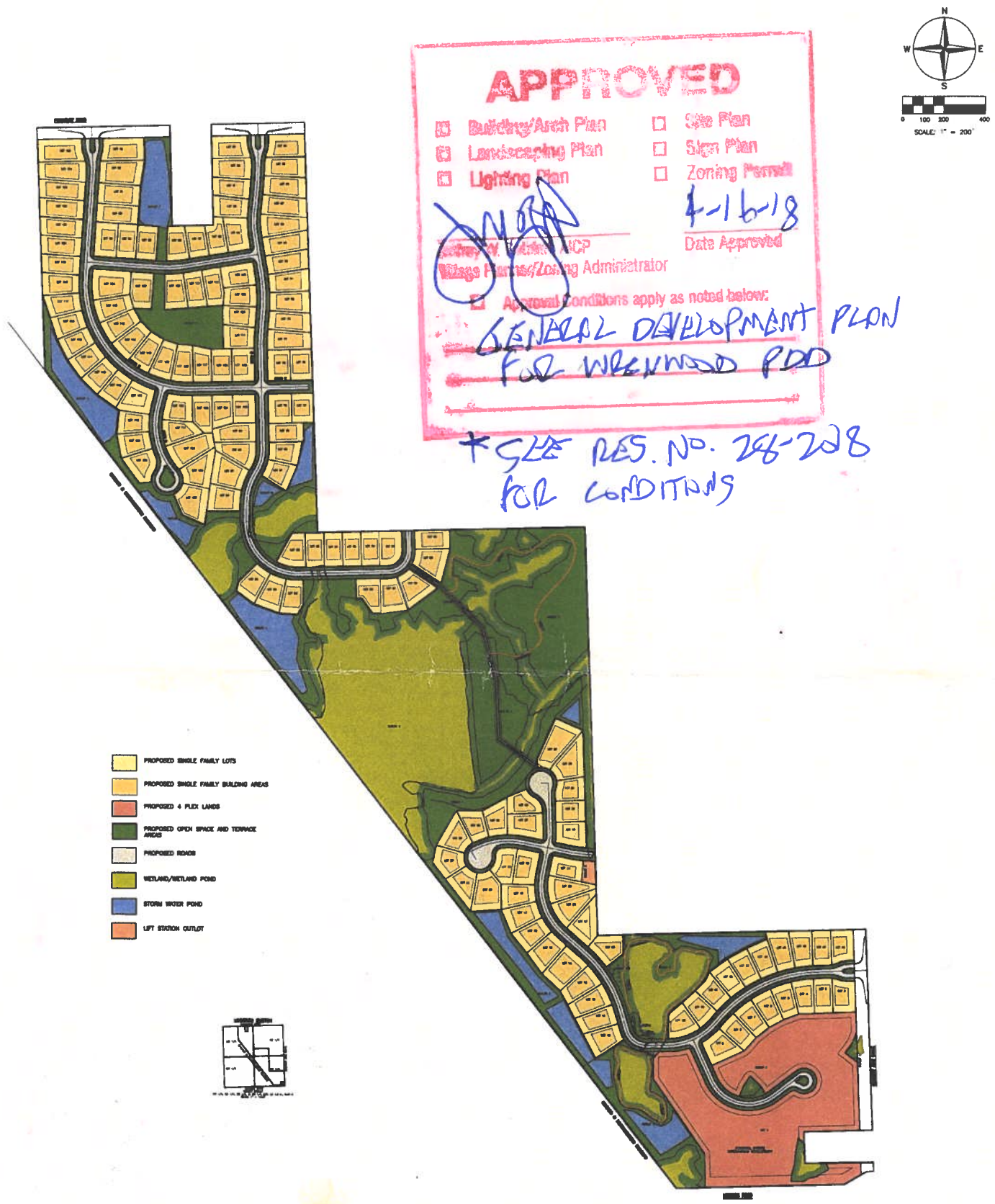

NO.	REVISIONS	BY	DATE

DESIGNED BY: K. K. KLIMECK
DRAWN BY: K. K. KLIMECK
CHECKED BY: K. K. KLIMECK
SCALE: 1" = 200' HORIZ.
DATE: APRIL 12, 2018

WISCONSIN KALVIN K. KLIMECK E-36349 DOCKET NUMBER 4/12/18 PROFESSIONAL ENGINEER

PIONEER ENGINEERING AND SURVEYING, LLC.
CONSULTANTS IN SUBDIVISIONS AND COMMERCIAL DEVELOPMENTS
3902 C.T.H. "B"
JOHNSON CREEK, WI. 53038
E-MAIL: kalpioneereng@tds.net CELL: 414 651-0490

WRENWOOD
GENERAL DEVELOPMENT PLAN

MUNIC. PROJ. NO. _____
VILLAGE OF GERMANTOWN APPROVED _____ BY _____
VILLAGE ENGINEER DATE
PIONEER PROJ. NO. 17-01
PIONEER SHT. NO. PAGE 1 OF 1
PIONEER FILE NO. 17-01
LANDSCAPE

PRELIMINARY SUBDIVISION PLAT

3/11/19 Plan Commission Meeting

Woodland Ponds Estates / Germantown Acquisitions LLC

Village Planner Report **Germantown, Wisconsin**

Summary

David Leszczynski, agent for Germantown Acquisitions LLC, property owner, is requesting approval of a preliminary subdivision plat for a 16-lot, 29.7-acre single-family residential development called “Woodland Ponds Estates” located north of Elm Lane and west of Wasaukee Road.

Property Location: Elm Lane @ Wasaukee Road

Applicant/
Property Owner: David Leszczynski, Germantown Acquisitions LLC
3223 Fleur Da Lis Drive
Mequon, WI

Zoning: Rs-3: Single-Family

Adjacent Land Uses		Zoning
North	Residential	Rs-3
South	Residential/Agricultural	Rs-2/A-2
East	Residential/Agricultural (Mequon)	Ag
West	Residential (Harvest Hills)	Rs-3

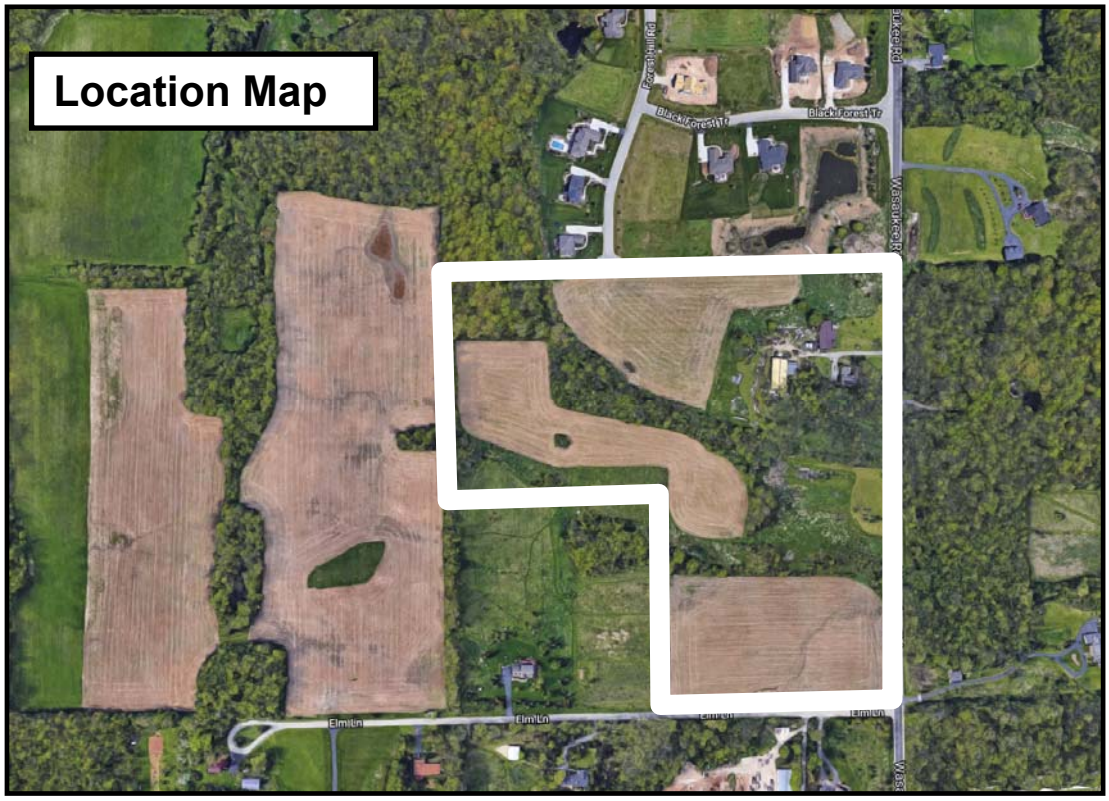

Background/Proposal

David Leszczynski, agent for Germantown Acquisitions LLC, property owner, is requesting approval of a preliminary subdivision plat for a 16-lot, 29.7-acre single-family residential development called “Woodland Ponds Estates” located north of Elm Lane and west of Wasaukee Road.

In August 2018, following a positive recommendation from the Plan Commission, the Village Board approved rezoning the property from A-1 to Rs-3 and a 17-lot concept plan. The original proposal to create a Planned Development District (PDD) was abandoned in favor of an Rs-3 District development with 16 or 17 single-family lots, depending on whether or not the WisDNR would approve the filling of two small wetland areas located on the property.

In October 2018, the WisDNR denied the developer’s application to fill the two wetland areas (located in what are now Outlot 2 and a portion of Outlot 3) but did grant permission to fill .007 acres (304 sqft) in Outlot 3 for driveway access purposes to serve proposed Lots #8 and #9. The approved wetland fill will allow the developer to replace an existing 15’ culvert previously used for an agricultural access located across a narrow gap between the wetlands in Outlot 3 (see attached). As a result, the development has been reduced to a total of 16 lots; 9 lots with access to/from Forest Hill Road.

As previously proposed, the developer intends to develop the land in two phases. Phase I development will include the 12 lots shown in the preliminary plat with 4 additional lots created in/from Outlot 4 in Phase 2 (consistent with the 16-lot concept plan presented in August 2018; copy attached). All lots will be served by individual wells and private on-site wastewater treatment systems (“POWTS” a.k.a. “septic systems”). Soil evaluations have been prepared and submitted that show all of the proposed lots (for both phases) can support the proposed POWTS (lot 3 will be served by an existing mound previously used by the existing farm house that will be removed).

As summarized below, the proposed development (Phase 1 & Phase 2) has the following characteristics:

TABLE 1.

Gross Area (Ac)	29.68
Wetland Area (Ac)	4.2
Right-of-Way (Ac)	4.56
Net Density Area (Ac)	20.92
# Single-Family Lots/DU's	16
Density (DU/net acre)	0.77
Open Space (Ac)	8.73
Avg Lot Size (ac)	1.02
Lot Size Range (Ac)	1.0 to 1.16

Staff Comments

Village Planner/Zoning Administrator

In accordance with the Village's Subdivision Code, the Plan Commission is responsible for reviewing the preliminary plat application and forwarding a recommendation to the Village Board along with comments received from the official "objecting agencies" (i.e. Department of Administration, WisDOT and Washington County), as well as, all other review agencies to whom the plat has been submitted (e.g. Southeastern Wisconsin Regional Planning Commission/SEWRPC, Germantown School District, all utility companies, etc).

The proposed landscaping plan is limited to the installation of street trees along the extension of Forest Hill Road. The plan needs to also include street trees on the cul-de-sacs and Wasaukee Road. At the time of this writing, the Developer has committed to revising the landscape plan to incorporate the additional street trees around the Taylor Trail cul-de-sac and along Wasaukee Road. Also, the street tree landscape plan needs final approval from the Village Forester. With all of the proposed streets having a rural cross-section (open ditches vs. curb & gutter), the final location of street trees will need to be installed close to the front/street yard property line on each lot. With some of the lots having narrow street frontage, location and installation may need to be coordinated at the time a building permit is issued to avoid the need to re-locate once driveway locations are determined. No subdivision monument sign is proposed.

The 17-lot version of the original concept plan reviewed by the Plan Commission in July 2018, had access to what are now Lots 8 and 9 coming from the Taylor Trail cul-de-sac to the west by way of shared driveway within a 20’ wide easement. At that time, it was pointed out that the Village’s Subdivision Code allowed shared driveways for up to three lots in a 30’ wide easement or right-of-way. As a result of further refinements to the storm water management plan and the WisDNR’s denial of the developer’s request to fill two small wetlands, the layout and configuration of lots around the Taylor Trail cul-de-sac has changed. As a result, access to Lots 8 and 9 is now proposed to come from a shared driveway in a 20’ wide easement across Lot 5 and Outlot 3. However, as was the case before, the shared driveway easement is required to be a minimum 30’ wide with a 16’ wide travel surface (in this case it will be paved). As discussed above, the WisDNR granted the developer permission to fill .007 acres (304 sqft) in Outlot 3 for this shared driveway serving Lots 8 and 9. The approved wetland fill will allow the developer to replace an existing 15’ culvert previously used for an agricultural access across the wetlands in Outlot 3 (see attached). Consequently, the preliminary plat, construction plans and Development Agreement need to be revised to show the requirement for a min. 30’ wide easement and 16’ paved travel surface.

The Developer’s Agreement should include a requirement that subdivision deed restrictions and covenants be submitted to the Village prior to final plat submittal that include a requirement that each individual lot contain the minimum landscaping required under Section 17.43(5).

Village Engineer/Public Works

The developer has submitted construction plans for the road improvements, storm water management facilities, and landscaping (street trees) for the development.

In a review memo dated February 25, 2019 (copy attached), the Village Engineer identifies a series of issues and plan corrections in the storm water management, grading and erosion control plans that need to be addressed and/or corrected prior to the Village executing a Development Agreement with the Developer or authorizing construction. The most significant issue is listed under Comment 4.b. The Engineer is requiring the developer to design the shared driveway to a particular design standard that includes a turn-around, sufficient width, base material and pavement thickness to support the load of fire equipment (see Fire Department recommendation below), and, to verify the driveway will not be under water in a flood event.

While current FEMA floodplain maps do not show any portion of the property located within the 100-year floodplain, the Village Engineer is concerned that Lots 8 and 9 could be in-accessible during a heavy storm event given the small 15” diameter culvert under the driveway across the wetland. If the 15” culvert creates this problem, replacing the existing 15” culvert with a larger diameter culvert would likely be the solution. However, staff acknowledges that replacing the existing 15” culvert with a larger diameter culvert may trigger the need for additional WisDNR permitting (i.e. an individual fill permit may be required vs. the current general permit approval granted by WisDNR for the 304 sqft fill required just to replace the existing 15” culvert).

If the developer is unable to provide proof that the shared driveway would not be under water in a flood event, staff recommends that the preliminary plat be approved with a condition that stipulates Lots 8 and 9 cannot be included as part of a final plat nor allowed to be develop until and unless said proof is provided and, if necessary, additional WisDNR permitting is required in order to replace the existing 15” culvert with a larger diameter culvert.

All of the Village Engineer’s comments, issues and recommendations in the February 25 review memo shall be addressed in a revised preliminary plat, final detailed construction plans, supplemental information and/or the required Development Agreement prior to authorization being granted for construction or approval of the final plat, as is appropriate. Also, the Village Surveyor identified a series of minor corrections and preliminary plat requirements in a January 23, 2019, review memo that will need to be made prior to approval of the final plat.

Finally, as was the case with Harvest Hills, the issue of the condition of Elm Lane and need for its’ re-construction is further impacted by this development (albeit not until the 4 lots in Phase 2 are platted and developed). As a result of the Harvest Hills development, the Village has tentatively scheduled a complete re-construction of Elm Lane in FY2020. It is expected that the developer of Woodland Ponds Estates will be required to make a proportionate-share financial contribution to the Village as was required of the Harvest Hills developer.

Parks & Recreation
In a February email from Park & Recreation Director Mark Schroeder (copy attached), the Village's Park & Recreation Commission reviewed the preliminary plat at their February 20 meeting. The commission discussed and recommended that the development include: (1) a pedestrian trail linking the north and south development areas through Outlot 3 from the Forest Hill Road cul-de-sac to the Harvest Hills cul-de-sac (Taylor Trail); and (2) the developer install/improve a paved pedestrian access/connectivity along the Elm Lane public right-of-way to maintain connectivity from the area of planned improvements to the current section of Elm Lane to the west. This pedestrian access will insure public access to Friedenfeld Park by future residents of the Woodland Ponds Estates Subdivision, existing and future residents of the area, and connect to the same/similar pedestrian access provided in the Harvest Hills subdivision development to the west.

Fire Department
The Fire Department has reviewed the preliminary plat and is recommending approval provided that the shared driveway to Lots 8 and 9 is constructed to meet the minimum requirements for accessibility under NFPA 1 Chapter 18 which includes a minimum 20' wide hard surface roadway able to support 60,000 lbs. of fire apparatus with at least 13.5' of overhead clearance.

Washington County
On February 25, the Washington County Land Use & Planning Committee met and determined that they have no objections to the preliminary plat.

Wisconsin Dept of Administration
No comments received to date.

Southeastern Wisconsin Regional Planning Commission (SEWRPC)
In a February 20, 2019 letter, SWERPC provides a series of comments and recommendations regarding the proposed development. The most significant comment from SEWRPC is that the property lies adjacent to but not within the Village's sanitary sewer service area (SSA) and, as such, recommends that the SSA be expanded to serve this development with public sanitary sewers, or, at a minimum include a requirement that when/if public sanitary sewer becomes available, lot owners are required to hook into said system. Other comments from SEWERPC acknowledge conditions that currently exist, items that are already required or regulated under Village Code (e.g. erosion control plans) and/or recommended actions that will are included as recommended conditions of preliminary plat approval.

WisDOT
Woodland Ponds Estates does not abut any highway under WisDOT jurisdiction. Therefore, no comments or objections have been filed.

Germantown School District
No comments or objections have been filed.

Village Planner Recommendation

APPROVE the Woodland Ponds Estates preliminary subdivision plat subject to the following conditions:

1. Developer shall enter into a Development Agreement with the Village pursuant to Section 18 of the Village Code (Subdivision and Platting), as well as, the preparation of detailed plans for the installation of public utilities and improvements including, but not limited to public street improvements (including a proportionate share funding contribution for all costs associated with the re-construction of Elm Lane as determined by the Public Works Director), storm water management facilities, master grading plan and erosion control, trails, landscaping & street trees, open space, lighting and signage.
2. The street tree landscape plan dated October 9, 2018 shall be approved by the Village Forester prior to installation of any street trees within the development. Street trees shall be installed close to the front/street yard property line. The timing of installation of the street trees and common open space landscaping shall be determined as set forth in the Development Agreement. The Developer shall revise the landscape plan to incorporate additional street trees required on the Taylor Trail cul-de-sac and Wasaukee Road.
3. All of the comments, outstanding issues, construction plan details and corrections, and plat preliminary corrections identified by the Village Engineer in the February 25, 2019 review memo, and by the Village Surveyor in a January 23, 2019 review memo, shall be addressed prior to executing the Development agreement and/or commencement of construction as appropriate.
4. The Development Agreement shall include a requirement that subdivision deed restrictions and covenants be submitted to the Village prior to final plat submittal that include a requirement that each individual lot contain the minimum landscaping required under Section 17.43(5).
5. Preliminary plat approval is subject to receipt of a “non-objection” letter from the WI Department of Administration-Plat Review Agency.
6. The Developer shall revise the landscape plan to incorporate additional street trees required on the Taylor Trail cul-de-sac and Wasaukee Road. Final approval of the street tree landscape plan shall be granted by the Village Forester prior to installation of said street trees.
7. If the developer is unable to provide proof that the shared driveway would not be under water in a flood event, the preliminary plat be approved with a notation on the face of the plat that stipulates Lot 8 and Lot 9 cannot be included in a final plat nor allowed to be developed unless and until adequate proof is provided to and approved by the Village Engineer.
8. If additional WisDNR permitting is required in order to replace the existing 15” culvert with a larger diameter culvert for any reason, Lot 8 and Lot 9 cannot be included in a final plat nor allowed to be developed unless and until said WisDNR permitting has been approved.
9. The Developer shall install: (a) a pedestrian trail linking the north and south development areas through Outlot 3 from the Forest Hill Road cul-de-sac to the Harvest Hills cul-de-sac (Taylor Trail); and (b) a paved pedestrian path in or adjacent to the Elm Lane public right-of-way as mutually agreed to with the Village Public Works Director to provide pedestrian accessibility from Woodland Ponds Estates development to a similar pedestrian path provided by the Harvest Hills subdivision to the west.
10. The shared driveway to Lots 8 and 9 shall be constructed within a 30’ wide easement and meet the minimum requirements for accessibility under NFPA 1 Chapter 18 which includes a minimum 20’ wide hard surface driveway capable of supporting 60,000 lbs. of fire apparatus with a minimum of 13.5’ overhead clearance.

WETLAND CROSSING EXHIBIT
ACCESS TO LOT 8 – WOODLAND PONDS ADD. NO. 1

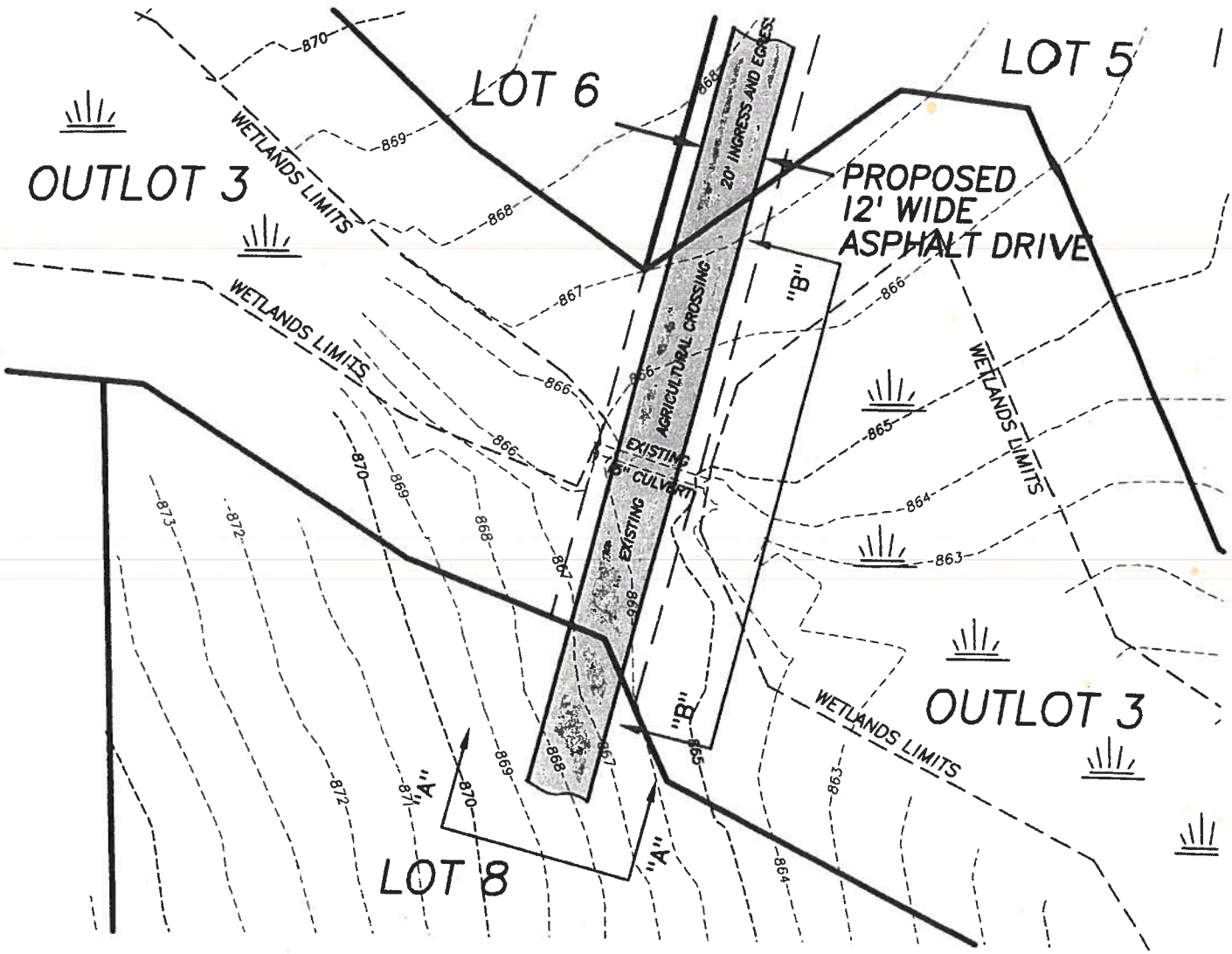

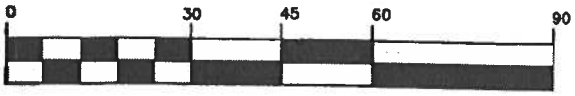

SCALE 1" = 30'

NORTH SHORE ENGINEERING, INC.
Consulting Engineers & Land Surveyors
11433 N. Port Washington Rd., Mequon, Wisconsin, 53092
(262) 241-9400 • FAX: (262) 241-5337
www.northshoreengineering.net

DATED: 10/3/2018

FIGURE 1–A

WETLAND CROSSING EXHIBIT
ACCESS TO LOT 8 – WOODLAND PONDS ADD. NO. 1

CROSS SECTION
VIEW "A" – "A"

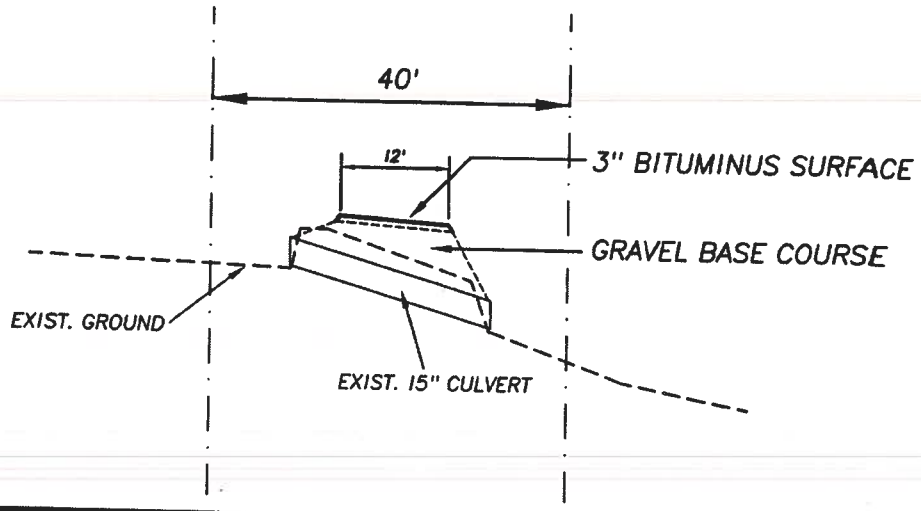

CROSS SECTION
VIEW "B" – "B"

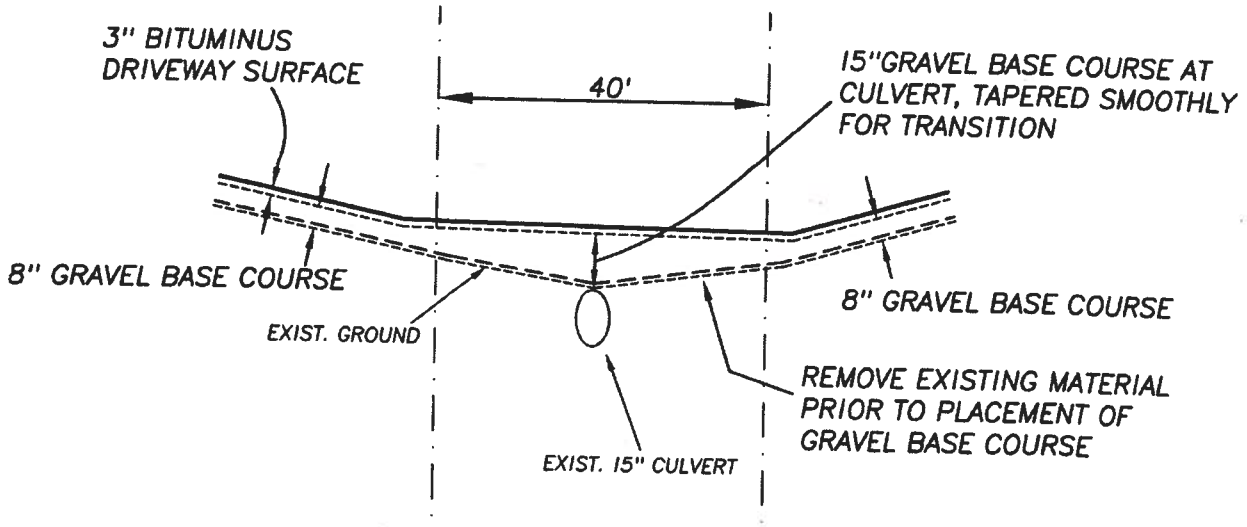

NOT TO SCALE

NORTH SHORE ENGINEERING, INC.
Consulting Engineers & Land Surveyors
11433 N. Port Washington Rd., Mequon, Wisconsin, 53092
(262) 241-9400 • FAX: (262) 241-5337
www.northshoreengineering.net

DATED: 10/3/2018

FIGURE 1–B

Village of Germantown ...Willkommen

Fee must accompany application
Preliminary & Final Plat Fees Combined
Under 10 lots $4,575
11-25 lots $5,600
26-50 lots $6,625
Over 51 lots $7,650

PAID 1-23-19

SUBDIVISION PLAT APPLICATION

Pursuant to Section 18.04 and 18.05 of the Municipal Code

Please read and complete this application carefully. **All applications must be signed and dated.**

1 **APPLICANT OR AGENT**

David Leszczynski
3223 Fleur De Lis Dr
Mequon WI 53092

Phone (414) 550 8087
Fax ( )
E-Mail dlesz2000@yahoo.com

PROPERTY OWNER

Germantown Acquisition LLC
3223 Fleur de Lis Dr.
Mequon WI 53092
David Leszczynski, AGENT
Phone (414) 550 8087

2 **PROPERTY ADDRESS OR GENERAL LOCATION** | **TAX KEY NUMBER(S)**

11749 N. Wasauke Rd Germantown WI 53022	Multiple ATTACHED TAX BILL

3 **READ AND INITIAL THE FOLLOWING:**

✓ I understand that the Subdivision Plat is not valid until recorded at the Washington County Register of Deeds. The Village will record the document and charge the applicant all applicable recording fees.

✓ If technical corrections to the Plat are required, I understand that the document will not be recorded until all corrections are made and approved by the Village.

✓ I understand that all applicable impact fees must be paid prior to recording. Failure to pay fees will delay recording and may ultimately result in the revocation of Village approval. I understand that parcels created outside the Sewer Service Area will require a soil test. I also understand that all properties abutting a State Highway will require DOT approval and I will be responsible for securing such approval prior to recording.

✓ I understand all delinquent property taxes on any of the properties involved shall be paid prior to recording.

✓ I understand that a Developer's Agreement will be required prior to recording of the plat.

4 **SIGNATURES -- ALL APPLICATIONS MUST BE SIGNED BY OWNER!**

David Leszczynski — ~~12/8/18~~ 1/23/19
Applicant — Date

David Leszczynski for Germantown Acquisition LLC — ~~12/8/18~~ 1/23/19
Owner — Date

WOODLAND PONDS ESTATE SUBDIVISION

Wasaukee Rd. & Elm Lane

Germantown Wisconsin

January 22, 2019

Owner Developer - Germantown Acquisitions, LLC

Contact - Dave Leszczynski

3223 Fleur De Lis Drive

Mequon, WI 53092

Dlesz2000@yahoo.com

414-550-8087

Engineering - North Shore Engineering, Inc.

James Hensel, P.E.

11433 N. Port Washington Road

Mequon, WI 53092

262-241-9400

RECEIVED

JAN 23 2019

OFFICE OF THE VILLAGE PLANNER
VILLAGE OF GERMANTOWN

WOODLAND PONDS SUBDIVISION NARATIVE

On July 9, 2018 the Plan Commission approved the rezoning of the 29.7 acre parcel from Agricultural (A-1) to Single Family (Rs-3). Initially a preliminary plat was going to be brought to the Plan Commission for a 7 lot parcel, Phase I with the possibility of an 8th parcel. At the same time as that preliminary plat a revised concept plan for the remaining lots of Phase II was to be brought to Plan Commission.

The preliminary plat submitted accounts for 12 of the originally submitted 17 lots. The original 7 Lots of Phase I and Lots 8 - 12 on the southern side of the wetland which were proposed to be a part of Phase II at the initial Plan Commission meeting. Outlot 4 is not a part of the preliminary plat and will be developed at a later date by Certified Survey Maps. Lots 8 - 12 are included at this time to insure all road construction, grading and storm water construction are done in conjunction with Harvest Hills to the west.

The Plan Commission and Village Planner made it clear that the long driveway easement from the western cul du sac, now known as Taylor Trail, was a non-starter. We therefore moved forward in petitioning and getting the DNR to approve an existing agricultural crossing for a driveway easement from Forest Hill Road, serving Lots 8 & 9, and providing a more manageable entryway to those lots. Now only 3 Lots, all adjacent to Taylor Trail, will be serviced by the Taylor Trail cul du sac.

The preliminary plat submitted does NOT ask for any relief in the form of a PDD. All of the Lots are at least 1 acre and meet the current guidelines of the Village of Germantown Rs-3 zoning, including the 25' wetland setback. Soil reports regarding POWTS have been submitted to Washington County and they have done an on site review. We expect their approval as soon as the preliminary plat is forwarded on to them. All DNR approvals have been submitted to the Village Planner.

VILLAGE OF GERMANTOWN
N112W17001 MEQUON RD
PO BOX 337
GERMANTOWN WI 53022

WASHINGTON COUNTY - STATE OF WISCONSIN
PROPERTY TAX BILL FOR 2018
REAL ESTATE

GERMANTOWN ACQUISITIONS LLC

Parcel Number: GTNV 241999
Bill Number: 222015

Important: Be sure this description covers your property. Note that this description is for tax bill only and may not be a full legal description. See reverse side for important information.

222015/GTNV 241999
GERMANTOWN ACQUISITIONS LLC
3233 LE FLEUR DR
MEQUON WI 53092

Location of Property/Legal Description
W124N11749 WASAUKEE RD
Sec. 24, T9N, R20E
SE NE EXC CSM 4134 DOC 1453134+1453712+1460842+1461236
29.410 ACRES

Please inform treasurer of address changes.

ASSESSED VALUE LAND	ASSESSED VALUE IMPROVEMENTS	TOTAL ASSESSED VALUE	AVERAGE ASSMT. RATIO	NET ASSESSED VALUE RATE
112,300	211,100	323,400	0.935699556	0.01740080 (Does NOT reflect credits)
ESTIMATED FAIR MARKET VALUE LAND	ESTIMATED FAIR MARKET VALUE IMPROVEMENTS	TOTAL ESTIMATED FAIR MARKET VALUE	☐ A star in this box means unpaid prior year taxes.	School taxes also reduced by school levy tax credit 530.22
See Reverse, Use Value Assessment				

NET PROPERTY TAX 5562.23

TAXING JURISDICTION	2017 EST. STATE AIDS ALLOCATED TAX DIST.	2018 EST. STATE AIDS ALLOCATED TAX DIST.	2017 NET TAX	2018 NET TAX	% TAX CHANGE
STATE OF WISCONSIN	0	0	0.00	0.00	
WASHINGTON COUNTY	530,878	526,426	824.91	831.33	0.8%
VILLAGE OF GERMANTOWN	1,858,402	1,845,093	1,630.70	1,665.21	2.1%
GERMANTOWN SCHOOL	11,576,120	10,722,819	2,423.73	2,705.11	11.6%
MILW AREA TECH COL	2,565,144	2,591,029	416.55	425.77	2.2%
TOTAL	**16,530,544**	**15,685,367**	**5,295.89**	**5,627.42**	**6.3%**
FIRST DOLLAR CREDIT			**-60.58**	**-65.19**	**7.6%**
LOTTERY AND GAMING CREDIT			**0.00**	**0.00**	**0.0%**
NET PROPERTY TAX			**5,235.31**	**5,562.23**	**6.2%**

TOTAL DUE: $5,562.23
FOR FULL PAYMENT, PAY TO LOCAL TREASURER BY:
JANUARY 31, 2019

Warning: If not paid by due dates, installment option is lost and total tax is delinquent subject to interest and, if applicable, penalty.
Failure to pay on time. See reverse.

FOR INFORMATION PURPOSES ONLY • Voter Approved Temporary Tax Increases

Taxing Jurisdiction	Total Additional Taxes	Total Additional Taxes Applied to Property	Year Increase Ends
GERMANTOWN SCHOOL	1,921,150	247.30	2037

PAY 1ST INSTALLMENT OF: $2,781.23

BY JANUARY 31, 2019

AMOUNT ENCLOSED _____

MAKE CHECK PAYABLE AND MAIL TO:

VILLAGE OF GERMANTOWN
PAYMENTS C/O US BANK
PO BOX 78322
MILWAUKEE, WI 53278-8322

PIN# GTNV 241999
GERMANTOWN ACQUISITIONS LLC
BILL NUMBER: 222015

INCLUDE THIS STUB WITH YOUR PAYMENT

PAY 2ND INSTALLMENT OF: $2,781.00

BY JULY 31, 2019

AMOUNT ENCLOSED _____

MAKE CHECK PAYABLE AND MAIL TO:

WASHINGTON COUNTY TREASURER
432 E WASHINGTON ST, PO BOX 1986
WEST BEND, WI 53095-7986

PIN# GTNV 241999
GERMANTOWN ACQUISITIONS LLC
BILL NUMBER: 222015

INCLUDE THIS STUB WITH YOUR PAYMENT

PAY FULL AMOUNT OF: $5,562.23

BY JANUARY 31, 2019

AMOUNT ENCLOSED _____

MAKE CHECK PAYABLE AND MAIL TO:

VILLAGE OF GERMANTOWN
PAYMENTS C/O US BANK
PO BOX 78322
MILWAUKEE, WI 53278-8322

PIN# GTNV 241999
GERMANTOWN ACQUISITIONS LLC
BILL NUMBER: 222015

INCLUDE THIS STUB WITH YOUR PAYMENT

PRELIMINARY PLAT

"WOODLAND PONDS ESTATES"

PART OF THE SOUTHEAST 1/4 OF THE NORTHEAST 1/4, OF SECTION 24, TOWN 9 NORTH, RANGE 20 EAST,
IN THE VILLAGE OF GERMANTOWN, WASHINGTON COUNTY, WISCONSIN

LEGEND :

- 860 — DENOTES EXISTING MAJOR CONTOURS
- 861 — DENOTES EXISTING MINOR CONTOURS
- DENOTES U.S.D.A. SOIL BOUNDARY
- DENOTES BUILDING SETBACK LINES
- DENOTES WETLAND LIMITS LINE
- DENOTES WETLAND AREAS
- TP #30 — DENOTES SOIL TEST LOCATION

F.E.M.A. NOTE :

1. THE SUBJECT PROPERTY LIES WITHIN ZONE "X" AREAS DETERMINED TO BE OUTSIDE THE 0.2% ANNUAL CHANCE FLOODPLAIN, AS DETERMINED BY FLOOD INSURANCE RATE MAP COMMUNITY PANEL NO. 55139C 0377 D, EFFECTIVE DATE: NOVEMBER 2, 2013.

SOILS LEGEND :

SYMBOL	NAME	Slopes
MtA	Mequon silt loam	1–3%
OuB	Ozaukee silt loam	2–6%
OuB2	Ozaukee silt loam	2–6% eroded
OuC2	Ozaukee silt loam	6–12% eroded
OuD2	Ozaukee silt loam	12–20% eroded
RaA	Radford silt loam	0–3%

NOTES :

1. ALL BEARINGS ARE REFERENCED TO GRID NORTH OF THE WISCONSIN STATE PLANE COORDINATE SYSTEM, SOUTH ZONE. (NAD27)
2. LOTS IN THIS DEVELOPMENT WILL USE ON–SITE SOIL ABSORPTION SANITARY SEWERAGE DISPOSAL SYSTEMS AND PRIVATE WELLS.
3. UNLESS NOTED OTHERWISE BUILDING SETBACKS ARE AS FOLLOWS:
   FRONT YARD = 45.0'
   SIDE YARD = 20.0'
   REAR YARD = 35.0'

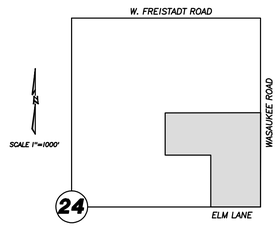

LOCATION MAP
NORTHEAST 1/4 OF SEC. 24–9–20

APPROVING AGENCIES :
VILLAGE OF GERMANTOWN

OBJECTING AGENCIES :
DEPARTMENT OF ADMINISTRATION

OWNER/SUBDIVIDER :
GERMANTOWN ACQUISITIONS,LLC
C/O DAVID LESZCZYNSKI
3223 FLEUR DE LIS DR.
MEQUON, WI. 53092
(414) 550–8087

SURVEYOR :
JAMES G. SCHNEIDER
NORTH SHORE ENGINEERING, INC.
11433 N. PORT WASHINGTON ROAD
MEQUON, WI 53092
(262) 241–9400

EXISTING ZONING :
EXISTING ZONING : Rs–3

Property Statistics:

Total Property Area = 29.68 acres (100%)
Wasaukee Rd., Elm Ln., Taylor Tr. & Forest Hill Rd. Dedication Area = 4.02 acres 13.53%)
Average Lot Area = 1.029 acres x 12 = 12.35 acres (41.60%)
Outlots 1–3, 5 & 6 Area = 8.73 acres (29.43%)
Outlot 4 Area (Future 4 Lot Division) = 4.58 acres (15.44%)

BENCHMARK INFORMATION
MAIN BENCHMARK: PUBLIC LAND SURVEY CONCRETE MONUMENT WITH ALUMINUM CAP, NORTHEAST CORNER OF THE NORTHEAST¼ OF SECTION 24, TOWN 9 NORTH, RANGE 20 EAST AT THE INTERSECTION OF WASAUKEE RD. & FREISTADT RD. TOP OF MON. ELEVATION = 872.68

SITE BENCHMARK 1: SOUTH RIM OF STORM MANHOLE AT SOUTH END OF FOREST HILL RD. (STATION 1+25.67, 21.7' LEFT). ELEVATION = 887.32

SURVEYOR'S CERTIFICATE

I, James G. Schneider, Professional Land Surveyor, do hereby certify:

THAT I have surveyed, divided, and mapped the preliminary plat of "WOODLAND PONDS ESTATES", described as follows:

The Southeast 1/4 of the Northeast 1/4 of Section 24, Township 9 North, Range 20 East, in the Village of Germantown, Washington County, Wisconsin.

Excepting Therefrom; Lot 1 of Certified Survey Map No. 4434, being that part of the Northeast 1/4 of Section 24, Township 9 North, Range 20 East, in the Village of Germantown, Washington County, Wisconsin.

Said Parcel containing 1,292,977 sq. ft/29.683 acres of land, more or less.

THAT I have made such survey, land division and preliminary plat at the direction of DAVID LESZCZYNSKI, Managing Member of Germantown Acquisition, LLC, Owner of said land.

THAT such plat is a correct representation of all the exterior boundaries of the land surveyed and the land division thereof made.

THAT I have fully complied with the provisions of the Village of Germantown Land Division Code, Chapter 18.04.

James G. Schneider P.L.S No. S–2127

WISCONSIN JAMES G. SCHNEIDER S-2127 MEQUON, WI LAND SURVEYOR

Dated this 22nd day of January, 2019

GRAPHIC SCALE
100 0 50 100 200 400
(IN FEET)
1 inch = 100 ft.

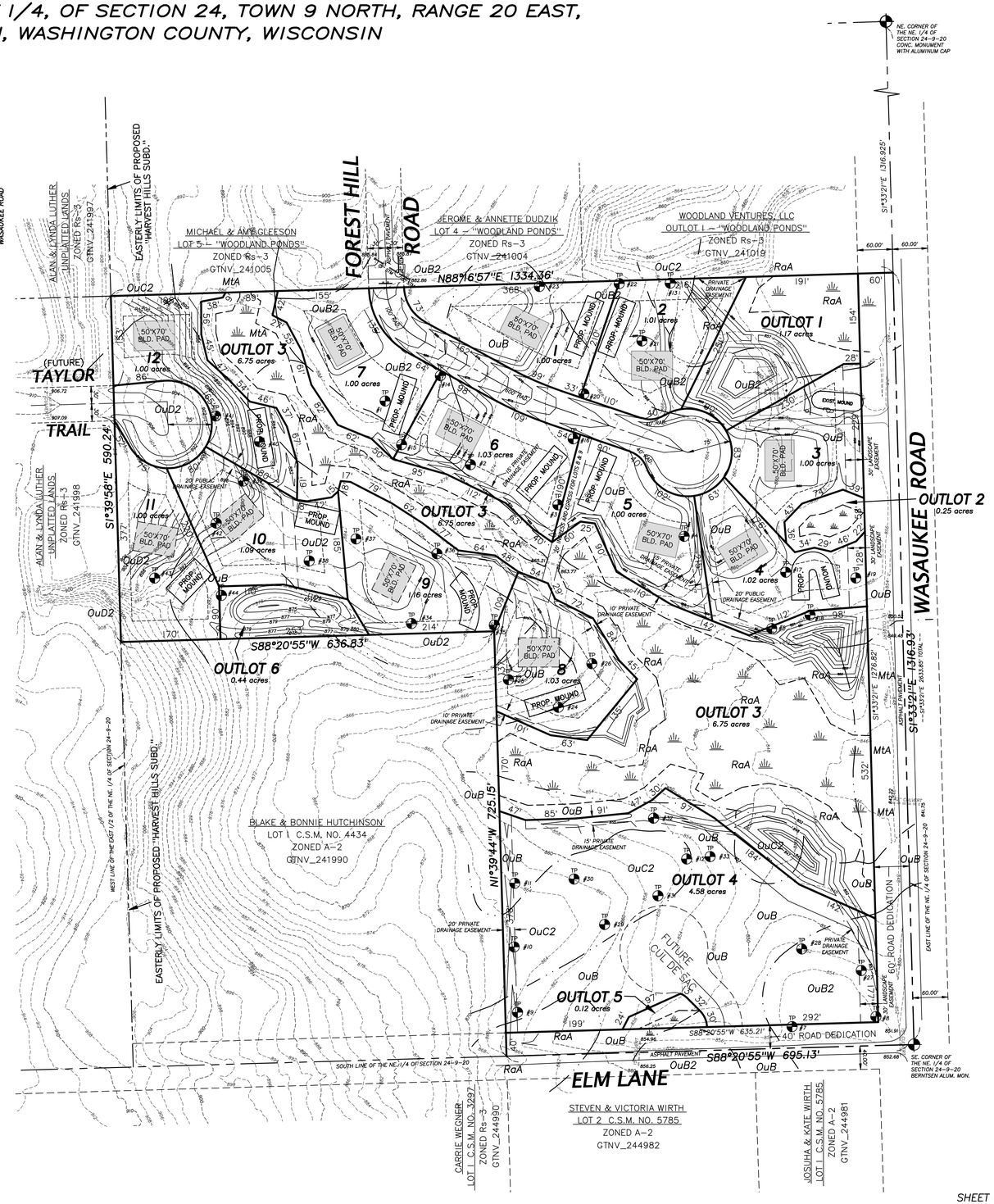

THIS INSTRUMENT DRAFTED BY JAMES G. SCHNEIDER

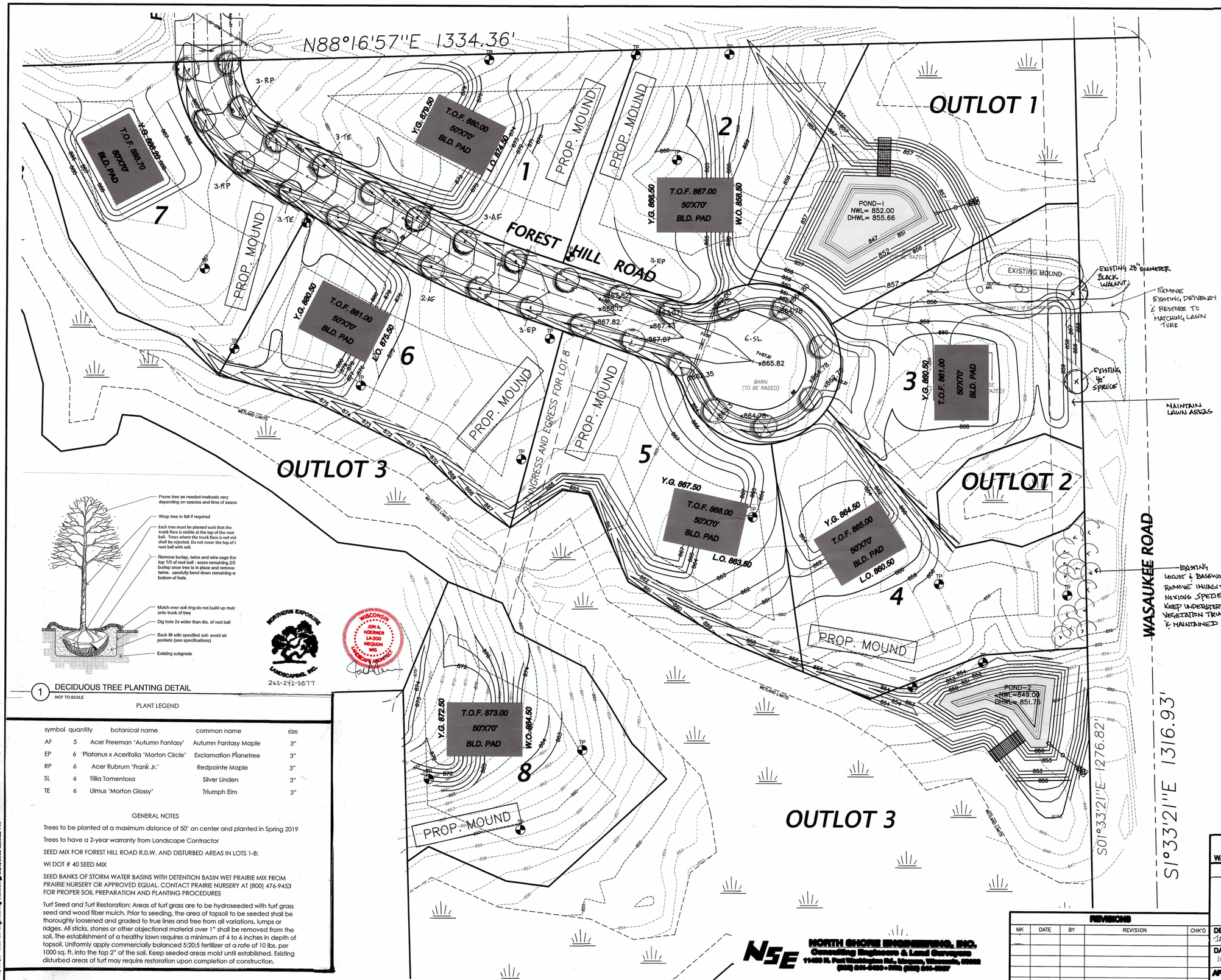

Legend

- 668 — EXISTING MINOR CONTOUR
- 670 — EXISTING MAJOR CONTOUR
- 665 — PROPOSED CONTOUR
- ×855.24 — EXISTING SPOT ELEVATION
- PROPOSED SPOT ELEVATION
- PROPOSED STRAWBALE OR WATTLE EROSION DITCH CHECK
- PROPOSED SILT FENCE
- PROPOSED DOUBLE-ROW SILT FENCE
- A — PROPOSED INLET PROTECTION & TYPE

DRAFT COPY

1 DECIDUOUS TREE PLANTING DETAIL

NOT TO SCALE

NORTHERN EXPOSURE LANDSCAPING, INC. 262-242-3877

WISCONSIN JON A. KOERNER LA-200 NEQUON WIS LANDSCAPE ARCHITECT

PLANT LEGEND

symbol	quantity	botanical name	common name	size
AF	5	Acer Freeman 'Autumn Fantasy'	Autumn Fantasy Maple	3"
EP	6	Platanus x Acerifolia 'Morton Circle'	Exclamation Planetree	3"
RP	6	Acer Rubrum 'Frank Jr.'	Redpointe Maple	3"
SL	6	Tillia Tomentosa	Silver Linden	3"
TE	6	Ulmus 'Morton Glossy'	Triumph Elm	3"

GENERAL NOTES

Trees to be planted at a maximum distance of 50' on center and planted in Spring 2019

Trees to have a 2-year warranty from Landscape Contractor

SEED MIX FOR FOREST HILL ROAD R.O.W. AND DISTURBED AREAS IN LOTS 1-8:

WI DOT # 40 SEED MIX

SEED BANKS OF STORM WATER BASINS WITH DETENTION BASIN WET PRAIRIE MIX FROM PRAIRIE NURSERY OR APPROVED EQUAL. CONTACT PRAIRIE NURSERY AT (800) 476-9453 FOR PROPER SOIL PREPARATION AND PLANTING PROCEDURES

Turf Seed and Turf Restoration: Areas of turf grass are to be hydroseeded with turf grass seed and wood fiber mulch. Prior to seeding, the area of topsoil to be seeded shall be thoroughly loosened and graded to true lines and free from all variations, lumps or ridges. All sticks, stones or other objectional material over 1" shall be removed from the soil. The establishment of a healthy lawn requires a minimum of 4 to 6 inches in depth of topsoil. Uniformly apply commercially balanced 5:20:5 fertilizer at a rate of 10 lbs. per 1000 sq. ft. into the top 2" of the soil. Keep seeded areas moist until established. Existing disturbed areas of turf may require restoration upon completion of construction.

WISCONSIN JAMES W. HENSEL E-28831 HUSCHENDALE, WI PROFESSIONAL ENGINEER

0 40 60 80 120

SCALE 1" = 40'

NORTH SHORE ENGINEERING, INC.
Consulting Engineers & Land Surveyors
11400 N. Port Washington Rd., Mequon, Wisconsin, 53092
(262) 241-2420 • FAX: (262) 241-2427

REVISIONS				
MK	DATE	BY	REVISION	CHK'D

VILLAGE OF GERMANTOWN

WASHINGTON COUNTY — WISCONSIN

Woodland Ponds Addition No. 1

Street tree & Seeding Plan

DESIGNED: JAK	DRAWN: JAK	CHECKED: JAK	SHEET L-1
DATE: 10/9/18	SCALE: 1"=40'		
APPROVED:	PROJECT: LS-4315		?

XA:\LS-4315-18-Engineering Base.dwg, 10/9/2018 2:55:15 PM

SOUTHEASTERN WISCONSIN REGIONAL PLANNING COMMISSION
W239 N1812 ROCKWOOD DRIVE • PO BOX 1607 • WAUKESHA, WI 53187-1607• TELEPHONE (262) 547-6721
FAX (262) 547-1103

Serving the Counties of: KENOSHA
MILWAUKEE
OZAUKEE
RACINE
WALWORTH
WASHINGTON
WAUKESHA

February 20, 2019

Ms. Lori Johnson
Planning Assistant
Village of Germantown
P. O. Box 337
Germantown, WI 53022

RECEIVED
FEB 22 2019
OFFICE OF THE VILLAGE PLANNER
VILLAGE OF GERMANTOWN

RE: Preliminary Plat/Woodland Ponds Estates Subdivision,
NE ¼, Section 24, T 9 N, R 20 E, Village of Germantown
SEWRPC No. CA-606-244

Dear Ms. Johnson:

This is to acknowledge receipt of your letter of January 24, 2019, concerning the above-captioned matter and to advise of the following Commission staff findings and recommendations relative thereto:

1. The proposed subdivision would create 12 single-family urban residential lots (i.e., residential density of less than five acres per dwelling unit) approximately one acre in size. The plat is proposed to be developed with onsite sewage disposal systems and not with centralized sanitary sewer service. While the area of the proposed subdivision is located outside of the planned sewer service area for Germantown, it abuts upon the current planned sewer service area. Consequently, the Commission would suggest that consideration be given to adding the area of the plat to the sewer service area and 1) developing the site with public sanitary sewers, or 2) requiring that the lot owners connect to sanitary sewers at such future time that sewers are extended to the property.

2. The subject subdivision plat abuts upon Wasaukee Road which is identified in the transportation element of VISION 2050 as a two-lane arterial along the development site. The existing right-of-way is adequate for the maintenance and improvement of this arterial facility.

3. The subject plat contains land delineated by the Commission as secondary environmental corridor (SEC) which consists of wetlands, woodlands, significant wildlife habitat, and steep slopes. The regional plan recommends that County and local government consider preserving and protecting such resources. Most of the SEC on the subject property is located within Outlot 3, and consequently would not be developed.

   In addition, the developer has appropriately identified the locations of wetland areas outside the SEC. As proposed, these wetland areas would be contained within the Outlots 1, 2, and 5. We would recommend that deed restrictions against the disturbance or development of all identified wetland areas within the subject subdivision be placed on the face of the plat.

WASHINGTON COUNTY
EST 1836
WISCONSIN

Planning and Parks Department

Jamie Ludovic, Central Services Director
Debora Sielski, Deputy Planning and Parks Administrator
Paul Sebo, County Conservationist
Phil Gaudet, Land Resources Manager

Public Agency Center
333 E. Washington Street, Suite 2300
P.O. Box 2003
West Bend, WI 53095-2003
(262) 335-4445
Fax: (262) 335-6868
webplan@co.washington.wi.us
www.co.washington.wi.us/PPD

NOTIFICATION OF ACTION ON PROPOSED SUBDIVISION PLAT
WASHINGTON COUNTY LAND USE & PLANNING COMMITTEE MEETING

02/25/2019

COPY

Department of Administration
Plat Review Unit
P O Box 1645
Madison WI 53701-1645

To Whom it May Concern:

This letter is to inform you that the Washington County Land Use & Planning Committee has considered the following subdivision plat pursuant to Wisconsin Statutes and applicable local Ordinances:

Date of Meeting: **02/25/2019**

Subdivision Name: **WOODLAND PONDS ESTATES**

/ / Pre-Preliminary Plat / X / Preliminary Plat / / Final Plat

Location: PART OF THE SE ¼ OF THE NE ¼, SECTION 24, VILLAGE OF GERMANTOWN
Municipality: VILLAGE OF GERMANTOWN
Subdivider: GERMANTOWN ACQUISITION, LLC - C/O DAVID LESZCZYNSKI
Surveyor: JAMES G. SCHNEIDER, NORTH SCHORE ENGINEERING, INC

Action taken: The Land Use & Planning Committee stated no objection to the **WOODLAND PONDS ESTATES** Preliminary Plat Review as presented.

If you have any questions regarding this subdivision plat, please do not hesitate to contact me.

Sincerely,

Jamie Ludovic, Central Services Director

RECEIVED
MAR 01 2019
OFFICE OF THE VILLAGE PLANNER
VILLAGE OF GERMANTOWN

cc: Municipal Clerk
Subdivider
Surveyor
Washington County, Land & Water Conservation Division
Washington County, Highway Department

4. The subject plat is not located within an identified one-percent-annual-probability (100-year recurrence interval) flood hazard area as delineated in the Federal Flood Insurance Study (FIS) for Washington County.

5. The subject plat is located in the Menomonee River watershed. Runoff from the subject plat drains to Little Menomonee Creek and Nor-x-way Channel. The regional water quality management plan recommends that nonpoint source pollution in this area be reduced. Adequate erosion control is necessary to reduce pollutant runoff from construction sites, and post-construction stormwater management would be needed to meet the nonpoint source pollution reduction requirements of the Village stormwater management ordinance. We would suggest that the subdivider call upon the Village Engineer for technical guidance in the attainment of sound erosion control management practices in connection with the development process, and that the post-construction stormwater management plan for the site comply with the requirements of the Village ordinance.

Should you have any questions concerning the foregoing, please do not hesitate to call.

Sincerely,

Kevin J. Muhs, PE, AICP
Executive Director

KJM/DAS/FGF/md
#246729 - WOODLAND PONDS ESTATES PRELIMINARY PLAT

Jeff Retzlaff

From: Mark Schroeder
Sent: Monday, February 25, 2019 11:26 AM
To: Jeff Retzlaff
Cc: Scott Coulthurst
Subject: Woodland Ponds Estates Preliminary Plat

Hello Jeff,

In response to the January 24th letter from Planning Assistant Lori Johnson, the Park & Recreation Commission reviewed the preliminary plat for the Woodland Ponds Estates Subdivision at the February 20th commission meeting. Based on the meeting discussion, the commission affirmed the direction that the developer provide 1.) a pedestrian trail linking the north and south development areas through Outlot 3 from the Forest Hill Road cul-de-sac to the Harvest Hills cul-de-sac (Taylor Trail), and 2.) the developer install/improve pedestrian access/connectivity (paved) along the Elm Lane public right-of-way to maintain connectivity from the area of planned improvements to the current section of Elm Lane to the west. This pedestrian access will insure public access to Friedenfeld Park by future residents of the Woodland Ponds Estates Subdivision as well as existing and future residents of the area.

Thanks,

Mark Schroeder, CPRP
Park & Recreation Director
Germantown Park & Recreation Department
Ph: (262) 250-4710 Fax: (262) 255-2920

GERMANTOWN PARK & RECREATION

Visit Us on Facebook

Discover. Play. Grow

State of Wisconsin
DEPARTMENT OF NATURAL RESOURCES
101 S. Webster Street
P.O. Box 7921
Madison, WI 53707-7921

Scott Walker, Governor
Daniel L. Meyer, Secretary
Telephone 608-266-2621
Toll Free 1-888-936-7463
TTY Access via relay - 711

August 3, 2018 WIC-SE-2018-67-01746

Dave Leszczynski
3223 Fleur De Lis Drive
Mequon, WI 53092

RE: Wetland Delineation Report for property located in the NE1/4 of the SE1/4 of Section 24, Township 09 North, Range 20 East, Village of Germantown, Washington County

Dear Mr. Leszczynski:

We have reviewed the wetland delineation report from Stantec Consulting Services, Inc. prepared for the above mentioned site. This letter will serve as confirmation that the wetland boundaries as shown on the attached wetland delineation map are acceptable. This finding is based upon a June 28, 2018 field visit. Any filling or grading within these areas may require DNR approvals. Our wetland confirmation is typically valid for five years. Be sure to send a copy of the report, as well as any approved revisions, to the U.S. Army Corps of Engineers.

In order to comply with Chapter 23.321, State Statutes, please supply the department with a polygon shapefile of the wetland boundaries delineated within the project area. Please do not include data such as parcel boundaries, project limits, wetland graphic representation symbols, etc. If internal upland polygons are found within a wetland polygon, then please label as UPLAND. The shapefile should utilize a State Plane Projection, and be overlain onto recent aerial photography. If a different projection system is used, please indicate what system the data are projected to. In the correspondence sent with the shapefile, please supply a brief description of each wetland's plant community (eg: wet meadow, floodplain forest, etc.). Please send these data to Calvin Lawrence (608-266-0756, or calvin.lawrence@wisconsin.gov).

There are potentially navigable waterways present on the property. DNR Chapter 30 permits may be needed if earthwork (filling, dredging, etc.) or structures (culverts, bridges, erosion control, etc.) are proposed in or adjacent to navigable waterways.

It should be noted that evidence of artificial drainage (drain tiles) was observed within portions of the property. If the drain tiles are not maintained the extent of the wetland boundaries within the project area could change, potentially creating the need for a reevaluation of the wetlands.

If you are planning development on the property, you are required to avoid take of endangered and threatened species, or obtain an incidental take authorization, to comply with the state's Endangered Species Law. To insure compliance with the law, you should submit an endangered resources review form (Form 1700-047), available at https://dnr.wi.gov/topic/ERReview/Review.html. The Endangered Resources Program will provide a review response letter identifying any endangered and threatened species and any conditions that must be followed to address potential incidental take.

In addition to contacting WDNR, be sure to contact your local zoning office and U.S. Army Corps of Engineers to determine if any local or federal permits may be required for your project.

If you have any questions, please contact me at (608) 261-6430 or email Neil.Molstad@wisconsin.gov.

Sincerely,

Neil Molstad
Wetland Identification Specialist

cc: April Marcangeli, Project Manager, U.S. Army Corps of Engineers
Village of Germantown
Brian Lennie, Stantec
Michelle Scott, DNR Water Management Specialist
Intake, DNR Stormwater SE Region
Chris Jors, SEWRPC

Attachments:

Project Area Location Map
Wetland Delineation Mapping for the Project Area

V:\1937\Active\193706107\03_data\gis_cad\gis\mxds\fig1_topo_193706107.mxd Revised: 2018-05-22 By: aswam

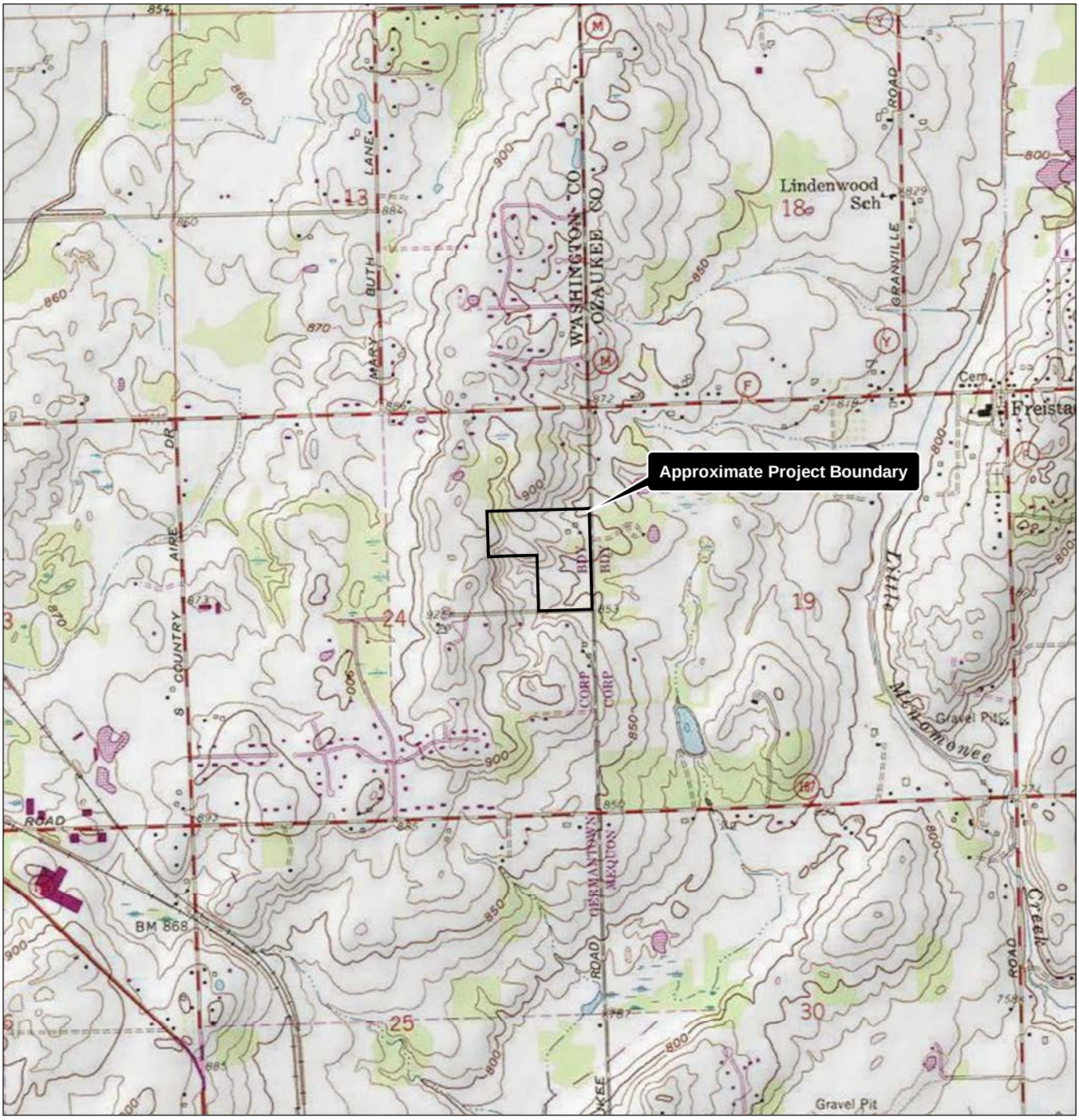

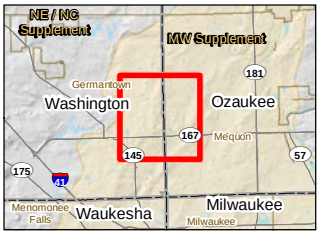

Legend

Approximate Project Boundary

Notes
1. Coordinate System: NAD 1983 StatePlane Wisconsin South FIPS 4803 Feet
2. Data Sources Include: Stantec, WisDOT, WDNR
3. Background: USGS 7.5' Topographic Quadrangles

Disclaimer: Stantec assumes no responsibility for data supplied in electronic format. The recipient accepts full responsibility for verifying the accuracy and completeness of the data. The recipient releases Stantec, its officers, employees, consultants and agents, from any and all claims arising in any way from the content or provision of the data.

Figure No.
1

Title
Project Location and Topography

Client/Project
Dave Leszczynski
29 Acre Parcel
Wetland Delineation

Project Location
T9N, R20E, S24,
V. of Germantown,
Washington Co., WI

193706107
Prepared by AJS on 2018-05-15
Technical Review by DG on 2018-05-16
Independent Review by BSL on 2018-05-22

0 1,000 2,000 Feet
1:24,000 (at original document size of 8.5x11)

N

Stantec

V:\1937\Active\193706107\03_data\gis_cad\gis\mxds\fig5_FCD_193706107.mxd Revised: 2018-05-22 By: aswam

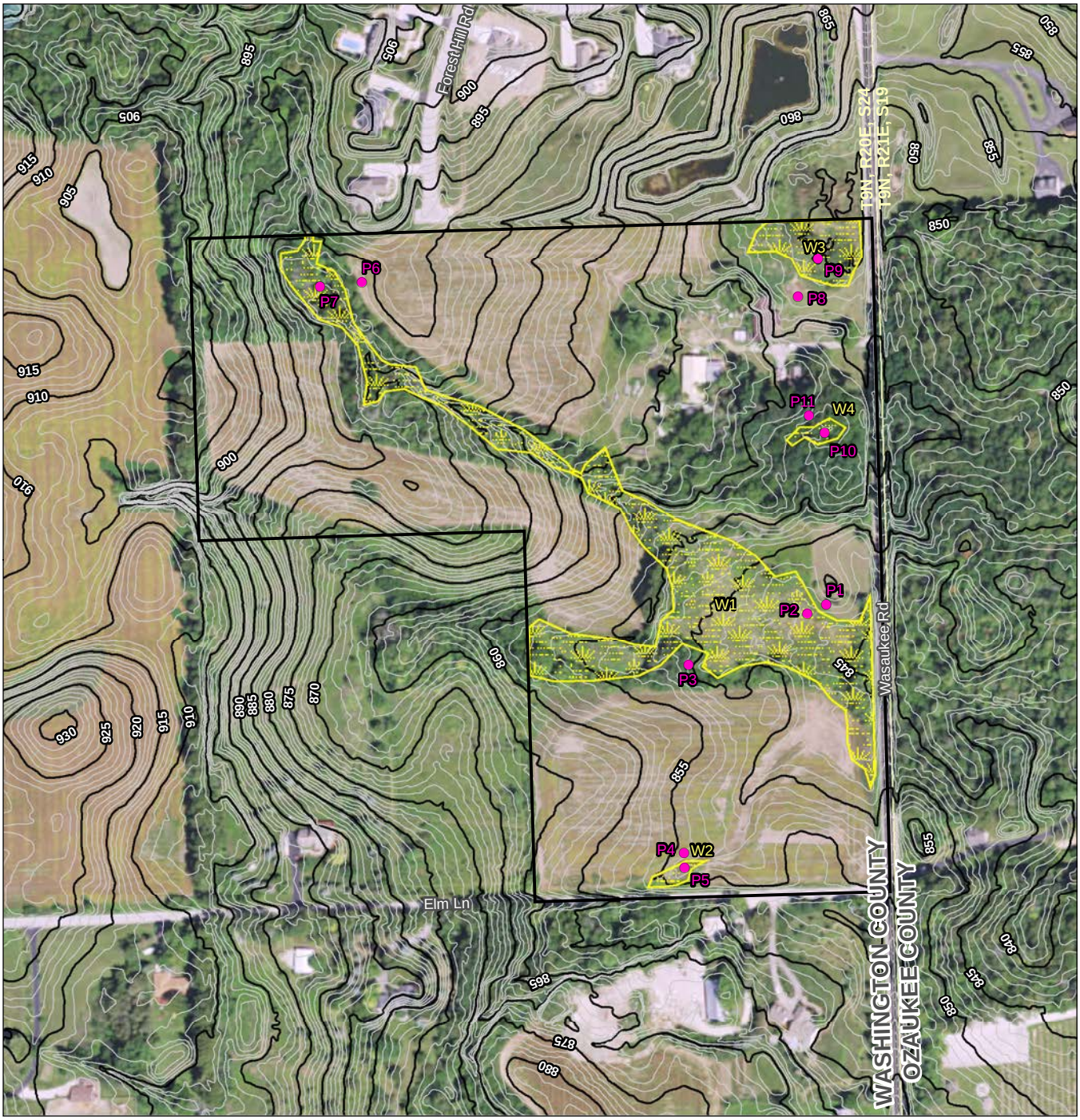

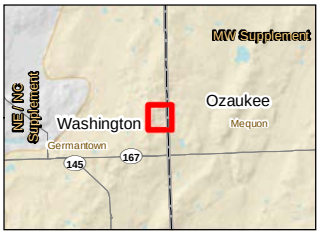

Legend

- Approximate Project Boundary
- 5ft Elevation Contour
- 1ft Elevation Contour
- Sample Point
- Field Delineated Wetland

DNR 24k Hydrography

- Perennial Stream
- Intermittent Stream
- Waterbody

Notes
1. Coordinate System: NAD 1983 StatePlane Wisconsin South FIPS 4803 Feet
2. Data Sources Include: Stantec, WisDOT, WDNR
3. Orthophotography: NAIP 2017

Disclaimer: Stantec assumes no responsibility for data supplied in electronic format. The recipient accepts full responsibility for verifying the accuracy and completeness of the data. The recipient releases Stantec, its officers, employees, consultants and agents, from any and all claims arising in any way from the content or provision of the data.

Figure No.
5

Title
Field Collected Data

Client/Project
Dave Leszczynski
29 Acre Parcel
Wetland Delineation

Project Location
T9N, R20E, S24,
V. of Germantown,
Washington Co., WI

193706107
Prepared by AJS on 2018-05-15
Technical Review by DG on 2018-05-16
Independent Review by BSL on 2018-05-22

0 150 300 Feet
1:3,600 (at original document size of 8.5x11)

N

Stantec

Engineering Department Memorandum

To : Larry Ratayczak, Public Works Director

From : Eric Nitschke, Village Engineer

Date : February 25, 2019

Re : Development Review for Woodland Pond Estates Subdivision

---

Larry,

Included you will find the review comments pertaining to the Woodland Pond Estates site review.

Woodland Ponds Estates – Site Review

1. Sanitary comments
    a. No comments

2. Water comments
    a) No comments

3. Highway comments
    a. No comments

4. Engineering comments

    a. Storm Water Management Plan Comments
        i. Please provide ditch and culvert sizing calculations. All ditches and culverts are to be sized at a minimum for a 25-year storm. However, all overland flow routes are to be sized for the 100-year event.
        ii. The Village believes the swale between lots 10 and 12 should be converted to a drainage pipe. Runoff from the southeast side of Lot 12 should still have access to pipe that runs North-South across Lot 10. The reason for this suggestion is to prevent future drainage issues that have been experienced in similar cases elsewhere in the Village. Overland flow paths still need to be accounted for.
        iii. The Village would like clarification for Lot 10 regarding elevations of the 15" HDPE drainage pipe and the sanitary sewer lateral running

from the house to mound. There are concerns about acceptable cover, as well as the two lines interfering with each other.

iv. The Village believes the swale between Lots 4 and 5 should be converted to a buried drainage pipe. The reason for this suggestion is to prevent future drainage issues that have been experienced in similar cases elsewhere in the Village. Overland flow paths still need to be accounted for.

v. Pond 2A's outlet structure and emergency overflow need to be redesigned as concentrated flow is proposed to be discharged in to the property to the south. There may be a need to utilize a BMP that focuses on volume control.

vi. Pond 1B and the overflow component that discharges to the south east towards the ROW needs to be reviewed for re-positioning the discharge further upstream in relation to the wetland (Outlot 3).

vii. The Village would like clarification on Outlot 4 (To Be Developed In Future). The area is included in the Storm Water Management Plan but is not included in the overall grading plan. Please provide further details for the overall plan on Outlot 4.

viii. The proposed mound location on Lot 4 compromises the overland flow route from the wetlands. The site layout should be modified as the current proposed mound location stops natural flow of water draining from the north into the wetlands in the south.

ix. Staff would like to discuss the proposed "Future Ditch Diversion" on Elm Lane.

x. A signed and recorded Storm Water Maintenance Agreement is required prior to final approvals.

b. Grading Plan

i. Building pad elevations and walkout elevations should be shown on the grading plans.

ii. The proposed private driveway for lots 8 and 9 should be designed to accept loads from fire apparatus.

1. This includes base, pavement thickness and width
2. Provide for a proper turn-around at the end of the driveway
3. Verify 100-year floodplain does not overtop access drive

iii. Some lots have very odd shapes. How will the lot lines be marked so as to prevent builders and homeowners from grading in the 25 foot wetland setback?

iv. Lot 12 is downslope of a detention pond. The grading plan should take into account a certain level of protection if the upstream pond has a berm failure.

v. Recertifications of the ponds, outlet structures and culverts will be required prior final approval. Emergency spillway elevations must be a minimum of 1 foot below top of berm elevations.

c. Erosion Control Plan

i. A more detailed erosion control plan is required. Sequencing should be a part of the plan. Silt fence, erosion bales, ditch checks and

temporary BMP's are also to be called out on a separate plan sheet. Currently this information is spread out on a variety of plan sheets.

ii. There are some significant slopes on the proposed ditches. How will they be reinforced to prevent erosion?

iii. If the ponds silt in during site construction, the developer will be required to dredge the ponds and certify all pond elevations prior to approval.

d. Sheet C-5 calls for the surface lift of asphalt to be 5LT 58-28 S. The surface lift is to be specified as 4LT 58-28 S.

e. The village's surveyor has provided a separate list of comments that also are to be addressed prior to final approvals being granted.

f. All local and state approvals are required prior to work commencing onsite. It is the developer's responsibility to insure all approvals are obtained prior to start of construction.

PRELIMINARY SUBDIVISION PLAT REVIEW CHECKLIST

Name: Woodland Ponds Estates
Professional Land Surveyor: Jim Schneider, PLS
Firm Name: North Shore Engineering
Dated: January 23, 2019

18.04 - PRELIMINARY PLAT.

(1) **GENERAL.** A preliminary plat shall be required for all subdivisions and shall be based upon a survey by a Professional Land Surveyor and the plat shall be prepared on ~~tracing cloth,~~ reproducible drafting film paper of good quality at a map scale not larger than 100 feet to the inch or an AutoCAD .dwg file of the preliminary subdivision plat and shall show correctly on its face or in the file, the following information:

- (a) Title or name under which the proposed subdivision is to be recorded.
- (b) Proper location of proposed subdivision by government lot, quarter section, town, range, county and state.
- (c) General location sketch showing the location of the subdivision within the U. S. Public Land Survey section.
- (d) Date, graphic scale and north point.
- (e) Names and addresses of the owner,
    - (e) subdivider name and address
    - (e) Name and Address of the Professional Land Surveyor preparing the plat.
- (f) The entire area contiguous to the proposed plat owned or controlled by the subdivider shall be included on the preliminary plat even though only a portion of said area is proposed for immediate development. *The Plan Commission may waive this requirement where it is unnecessary to fulfill the purposes and intent of this chapter and severe hardship would result from strict application thereof.*

(2) **PLAT DATA.** All preliminary plats shall show the following:

- (a) Exact length and bearing of the exterior boundaries of the proposed subdivision referenced to a corner established in U. S. Public Land Survey and the total acreage encompassed thereby.

- (b) Existing *and proposed* contours at vertical intervals of not more than 2 feet where the slope of the ground surface is less than 10% and of not more than 4 feet where the slope of the ground surface is 10% or more. Elevations shall be marked on such contours based on National Geodetic Vertical Datum of 1929 ~~(mean sea level).~~

- All horizontal mapping shall be tied to the Wisconsin State Plane Coordinate System, South Zone-Grid and the North American Datum of 1927. (NAD27)

- (c) Water elevations of adjoining lakes and streams at the date of the survey and approximate high and low water elevations, all referred to National Geodetic Vertical Datum of 1929 ~~mean sea level (1929) datum~~.

- (d) Limits and elevation of the 100-year recurrence interval flood as shown on the flood land maps supplemental to the Village Zoning District Maps, or where such data is not available, a line 5 feet above the maximum flood of record.

- (e) Location, right-of-way width and names of all existing streets, alleys or other public ways, easements, railroad right of way and utilities easements and all U. S. Public Land Survey section and quarter section lines within the exterior boundaries of the plat or immediately adjacent thereto.

- (f) Type, width and elevation of any existing street pavements within the exterior boundaries of the plat or immediately adjacent thereto together with any legally established centerline elevations, all to mean sea level (1929) datum.

- (g) Location and names of any adjacent subdivision, parks and cemeteries and owners of record of abutting unplatted lands.

- (h) Location, size and invert elevation of any existing sanitary or storm sewers, culverts, and drain pipes, the location of manholes, catch basins, hydrants, power and telephone poles and the location and size of any existing water and gas mains within the exterior boundaries of the plat or immediately adjacent thereto. If no sanitary or storm sewers or water mains are located on or immediately adjacent to the lands being platted, the nearest such sewers or mains which might be extended to serve such lands shall be indicated by their direction and distance from the nearest exterior boundary of the plat and their size and invert elevations noted on the plat.

- (i) Locations of all existing property boundary lines, structures, drives, streams, ponds and watercourses, ~~marshes~~ delineated wetlands, rock outcrops, wooded areas, railroad tracks and other similar significant natural or manmade features within the tract being subdivided or immediately adjacent thereto.

- (j) Location, width and names of all proposed streets and public rights-of-way such as alleys and easements.

- (k) Approximate dimensions of all proposed building lots together with proposed lot and block numbers.

- (l) Location and approximate dimensions and size of any sites to be reserved or dedicated for parks, playgrounds, drainage ways, schools or other public use or sites which are to be used for group housing, shopping centers, church sites or other private uses not requiring lotting.

- (m) Approximate radii of all curves.

- (n) Existing zoning on and adjacent to the proposed plat.

- (o) Any proposed lake and stream access.

- (p) Any proposed lake and stream improvement or relocation.

- (q) Soil type, slope and boundaries as shown on the detailed operational soil survey maps prepared by the U. S. Soil Conservation Service. (move soils map to a sheet in the construction plan set)

- (r) Location of soil boring tests, where required by Wis. Adm. Code H 65.06(2), made to a depth of 6 feet, unless bedrock is at a lesser depth. The number of such tests shall be adequate to portray the character of the soil and the depths of bedrock and ground water from the natural undisturbed surface. To accommodate this purpose, a minimum of one test per 3 acres shall be made. Two copies of all test results shall accompany the preliminary plat.

- (s) Location of soil percolation tests, as required by and conducted in accordance with Wis. Adm. Code H 65.06(3), taken at the location and depth in which on-site soil absorption sanitary sewerage disposal systems are to be installed. The number of such tests shall not be less than one test per 3 acres or one test per lot, whichever is greater. Two copies of all test results shall accompany the preliminary plat.

(3) **STREET PLANS AND PROFILES.** The Village Engineer may require that the subdivider provide street plans and profiles showing existing ground surface, proposed and established street grades, including extensions for a reasonable distance beyond the limits of the proposed subdivision when requested. All elevations shall be based upon mean sea level (1929) datum, and plans and profiles shall meet the approval of the Village Engineer.

- Compliance
- None Applicable

(4) **TESTING.** The Village Engineer may require that borings and soundings be made in specified areas to ascertain subsurface soil, rock and water conditions, including depth to bedrock and depth to ground water table. Where the proposed land division will not be served by public sanitary sewer service, the provisions of Wis. Adm. Code H 65 shall be complied with, and the appropriate data submitted with the preliminary plat.

- Compliance
- None Applicable

(5) **SOIL AND WATER CONSERVATION.** The Village Engineer, upon determining from a review of the preliminary plat that the soil, slope, vegetation and drainage characteristics of the clearing, grading, filling and other earth moving operations in the development of the land division or otherwise entail a severe erosion and sedimentation hazard, may require the subdivider to provide an erosion control plan as provided in section 17.44 of this Code.

- Compliance

- None Applicable

(6) **COVENANTS.** The Plan Commission may require submission of a draft of protective covenants whereby the subdivider intends to regulate land use in the proposed subdivision and otherwise protect the proposed development.

- Compliance
- None Applicable

(7) **AFFIDAVIT.** The ~~survey~~ (Professional Land Surveyor) preparing the preliminary plat shall certify on the face of the plat that it is a correct representation of all existing land divisions and features and that he has fully complied with the provisions of this chapter.

- Compliance
- Non Applicable

State law reference— Preliminary plat, Wis. Stats. § 236.11

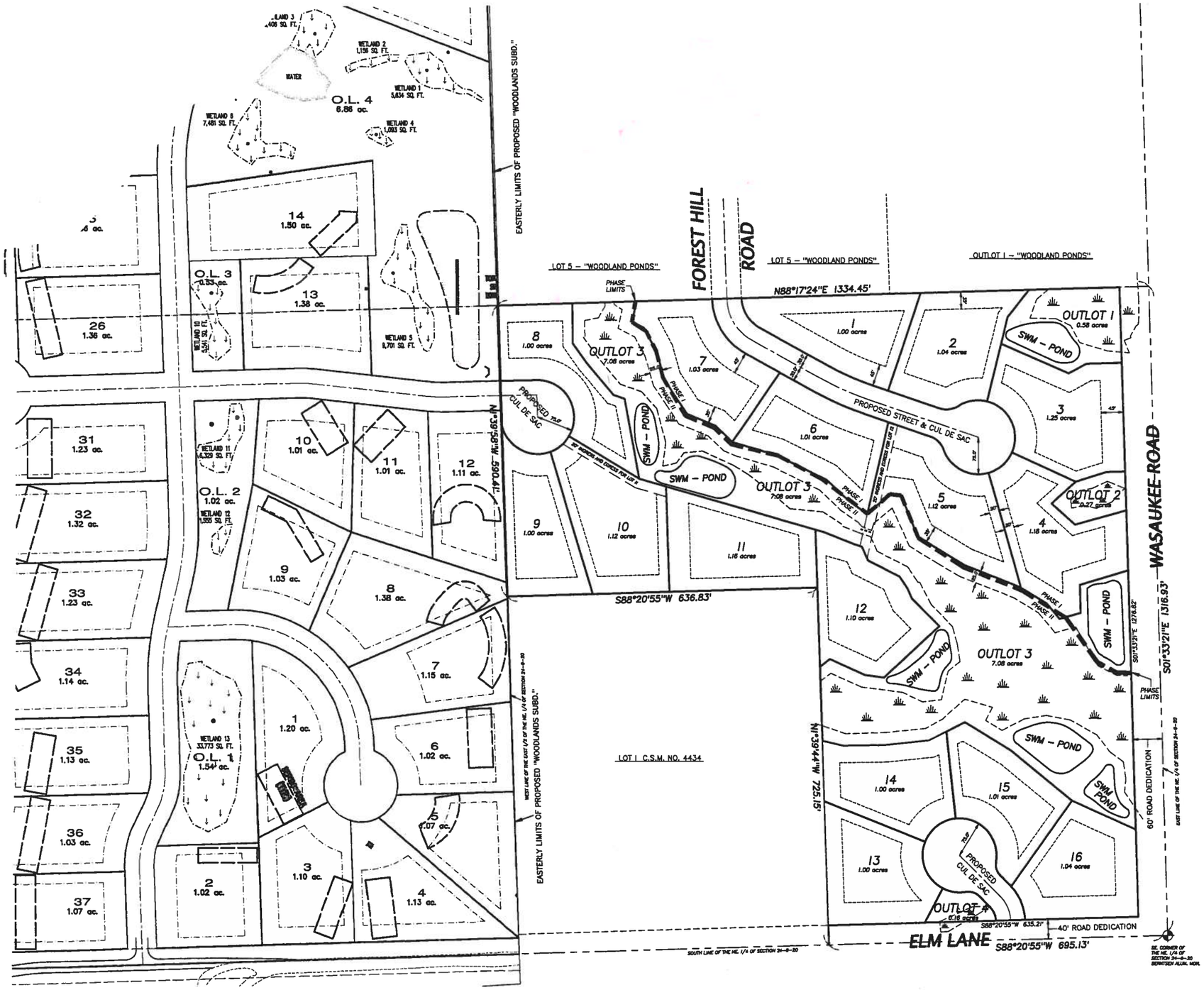

LEGAL DESCRIPTION :

The Southeast 1/4 of the Northeast 1/4 of Section 24, Township 9 North, Range 20 East, in the Village of Germantown, Washington County, Wisconsin.

Excepting Therefrom; Lot 1 of Certified Survey Map No. 4434, being that part of the Northeast 1/4 of Section 24, Township 9 North, Range 20 East, in the Village of Germantown, Washington County, Wisconsin.

Said Parcel containing 1,292,977 sq. ft/29.683 acres of land, more or less.

NOTES :

1. THE WETLANDS SHOWN ON THIS CONCEPTUAL ARE FIELD LOCATED/SURVEYED AND HAVE BEEN CONCURRED UPON BY THE DEPARTMENT OF NATURAL RESOURCES, PER THEIR JUNE 28, 2018 SITE VISIT.

2. ALL LOTS ARE A MINIMUM 25' FROM WETLANDS

Property Statistics:

Total Property Area = 29.68 acres (100%)
Total Outlots (1-4) Area =8.09 acres (27.3%)
Total Dedicated Road Right of Way Area = 4.53 acres (15.3%)
Average Lot Area = 1.07 acres x 16 =17.06 acres (57.5%)

Lot Counts:

16 – Single Family Lots
4 – Outlots

GRAPHIC SCALE

(IN FEET)
1 inch = 100 ft.

MARK	DATE	REVISION	BY	APV'D
4				
3				
2				
1	8-1-18	ADJUST LOTS FOR 25' WKD.LAND SETBACK	J.G.S.	J.W.H.

16 Lot - Single Family Conceptual Layout

for
Dave Leszczynski

Elm Lane & Wasaukee Road
Germantown, WI

FIELD CREW:	R.A.I. & S.P.Z.	APPROVED:
DATE:	JULY 31, 2018	
DWN. BY:	J.G.S.	Contract No.:
CHKD. BY:	J.W.H.	Plat No.: LS-0515-18 CONCEPT (16 LOT)

NORTH SHORE ENGINEERING, INC.
Consulting Engineers & Land Surveyors
11433 N. Port Washington Rd., Mequon, Wisconsin, 53092
(262) 241-9400 • FAX: (262) 241-5337
www.northshoreengineering.net

VILLAGE OF GERMANTOWN

Woodland Ponds Estates

Shared Access Driveway Exhibit

SCALE: 1" = 40'
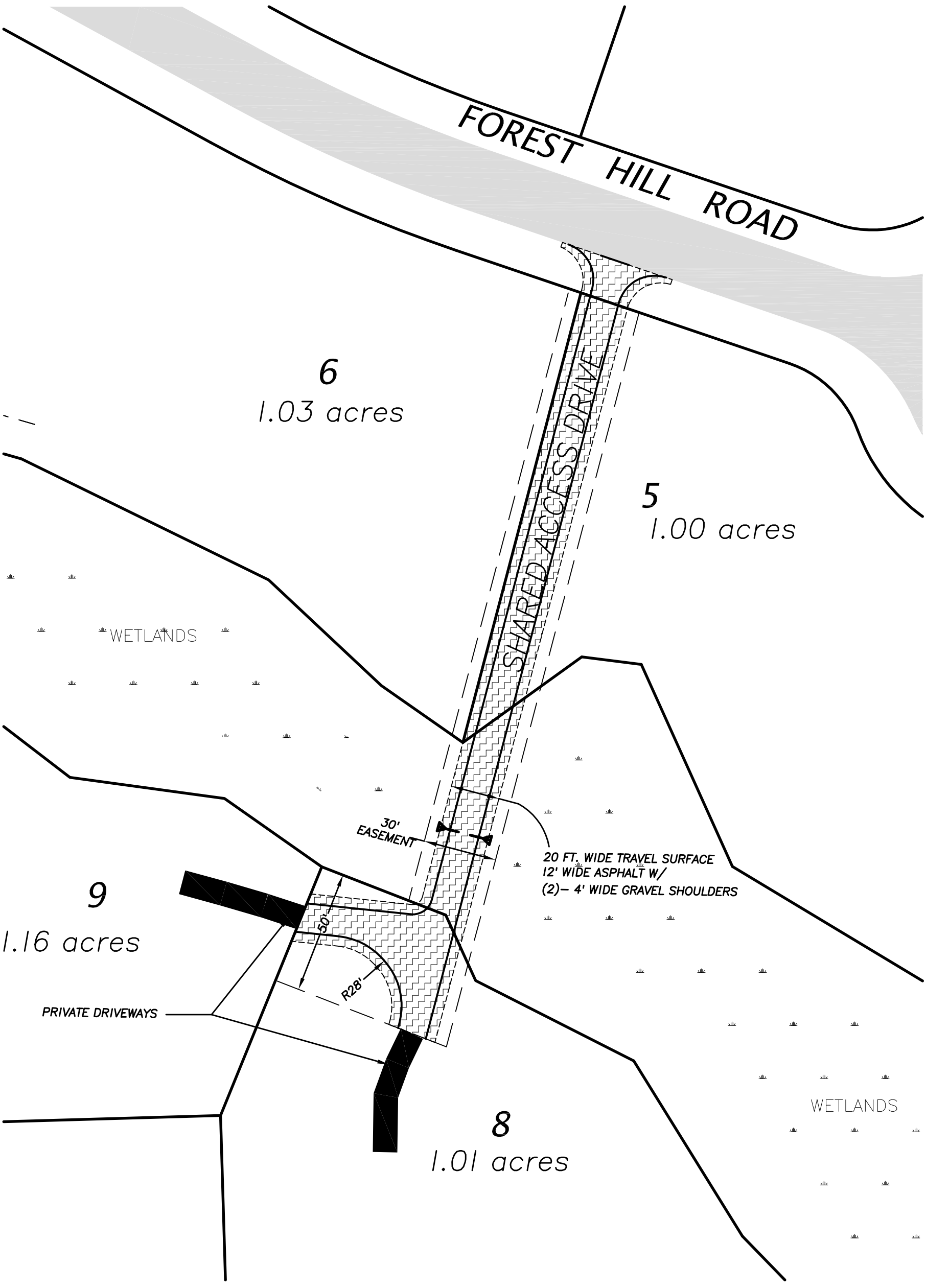
DATE: 3/7/2019